EFC4618R-P

Power MOSFET
24V, 6A, 23mΩ, Dual N-Channel

ON Semiconductor®

www.onsemi.com

Features

- 2.5V Drive
- Best Suited for LiB Charging and Discharging Switch
- Common-drain Type
- ESD Diode - Protected Gate
- Pb-Free, Halogen Free and RoHS Compliance

Specifications

Absolute Maximum Ratings at Ta=25°C

Parameter	Symbol	Conditions	Ratings	Unit
Source-to-Source Voltage	V_{SSS}		24	V
Gate-to-Source Voltage	V_{GSS}		±12	V
Source Current (DC)	I_S		6	A
Source Current (Pulse)	I_{SP}	PW≤10μs, duty cycle≤1%	60	A
Total Dissipation	P_T	When mounted on ceramic substrate (5000mm²×0.8mm)	1.6	W
Channel Temperature	Tch		150	°C
Storage Temperature	Tstg		−55 to +150	°C

Stresses exceeding those listed in the Maximum Ratings table may damage the device. If any of these limits are exceeded, device functionality should not be assumed, damage may occur and reliability may be affected.

Package Dimensions

unit : mm (typ)

7069-001

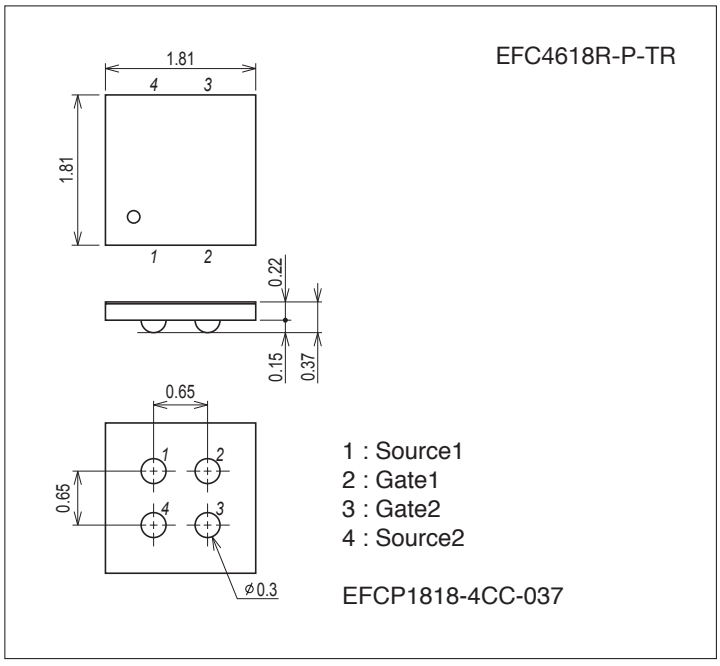

Product & Package Information

- Package : EFCP
- JEITA, JEDEC : -
- Minimum Packing Quantity : 5,000 pcs./reel

Packing Type : TR

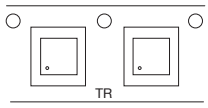

Marking

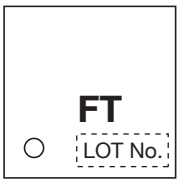

Electrical Connection

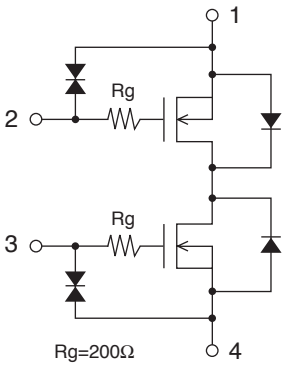

ORDERING INFORMATION

See detailed ordering and shipping information on page 2 of this data sheet.

© Semiconductor Components Industries, LLC, 2014

Electrical Characteristics at Ta=25°C

Parameter	Symbol	Conditions		Ratings min	Ratings typ	Ratings max	Unit
Source-to-Source Breakdown Voltage	$V_{(BR)SSS}$	I_S=1mA, V_{GS}=0V	Test Circuit 1	24			V
Zero-Gate Voltage Source Current	I_{SSS}	V_{SS}=20V, V_{GS}=0V	Test Circuit 1			1	μA
Gate-to-Source Leakage Current	I_{GSS}	V_{GS}=±8V, V_{SS}=0V	Test Circuit 2			±10	μA
Cutoff Voltage	V_{GS}(off)	V_{SS}=10V, I_S=1mA	Test Circuit 3	0.5		1.3	V
Forward Transfer Admittance	| yfs |	V_{SS}=10V, I_S=3A	Test Circuit 4		6.5		S
Static Source-to-Source On-State Resistance	R_{SS}(on)1	I_S=3A, V_{GS}=4.5V	Test Circuit 5	13.5	19.8	23	mΩ
	R_{SS}(on)2	I_S=3A, V_{GS}=4.0V	Test Circuit 5	14	20.5	24	mΩ
	R_{SS}(on)3	I_S=3A, V_{GS}=3.7V	Test Circuit 5	14.5	21	25.5	mΩ
	R_{SS}(on)4	I_S=3A, V_{GS}=3.1V	Test Circuit 5	14.9	23	30	mΩ
	R_{SS}(on)5	I_S=3A, V_{GS}=2.5V	Test Circuit 5	18.5	27	35	mΩ
Turn-ON Delay Time	t_d(on)	See specified Test Circuit.	Test Circuit 7		200		ns
Rise Time	t_r				815		ns
Turn-OFF Delay Time	t_d(off)				1840		ns
Fall Time	t_f				1770		ns
Total Gate Charge	Qg	V_{SS}=10V, V_{GS}=4.5V, I_S=6A			25.4		nC
Forward Source-to-Source Voltage	$V_{F(S-S)}$	I_S=3A, V_{GS}=0V	Test Circuit 6		0.76	1.2	V

Product parametric performance is indicated in the Electrical Characteristics for the listed test conditions, unless otherwise noted. Product performance may not be indicated by the Electrical Characteristics if operated under different conditions.

ORDERING INFORMATION

Device	Package	Shipping	memo
EFC4618R-P-TR	EFCP	5,000pcs./reel	Pb-Free and Halogen Free

Test circuits are example of measuring FET1 side

Test Circuit 1
V_{SSS} / I_{SSS}

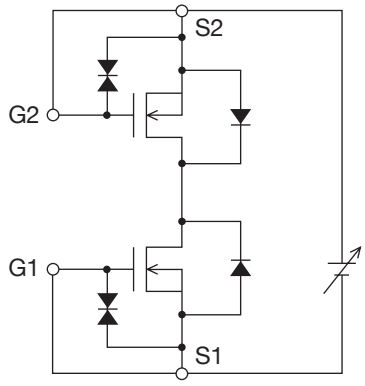

IT11565

Test Circuit 2
I_{GSS}(+) / (–)

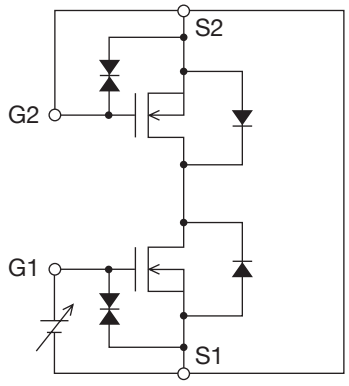

IT11566

Test Circuit 3
V_{GS}(off)

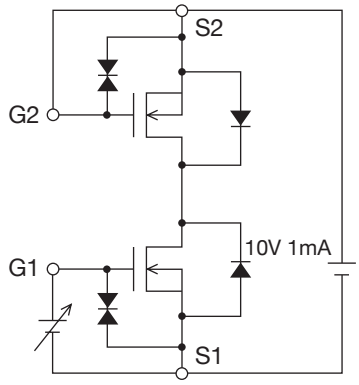

IT11567

Test Circuit 4
| yfs |

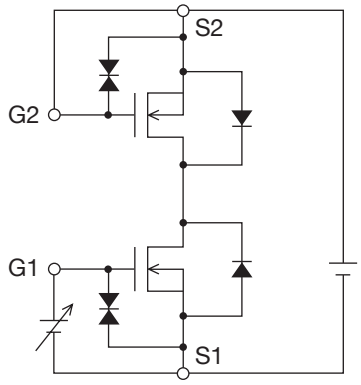

IT11568

* Note: Connect the mesurement terminal reversely if you want to measure the FET2 side.

Test Circuit 5
$R_{SS}(on)$

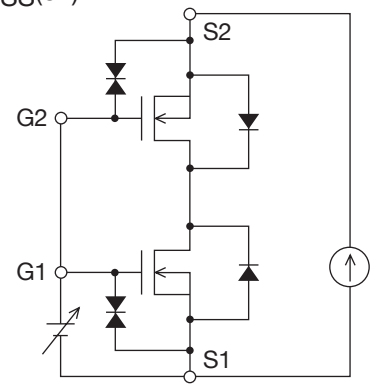

Test Circuit 6
$V_{F(S-S)}$

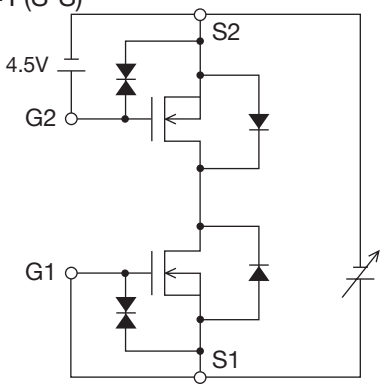

Test Circuit 7
$t_{d(on)}$, t_r, $t_{d(off)}$, t_f

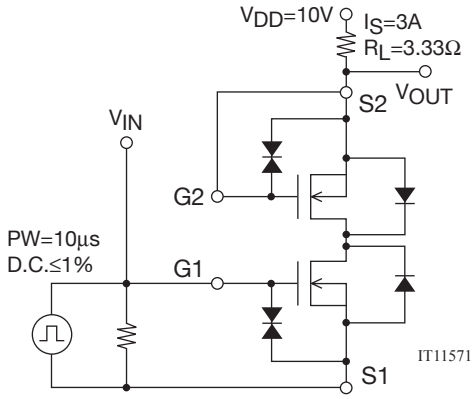

Test Circuit 8
Qg

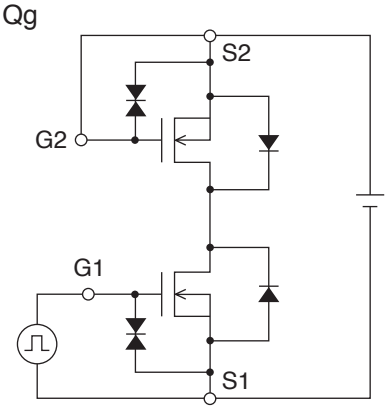

* Note: Connect the mesurement terminal reversely if you want to measure the FET2 side.

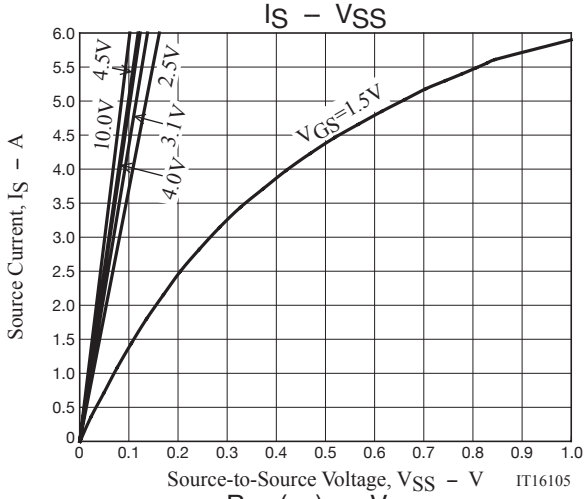

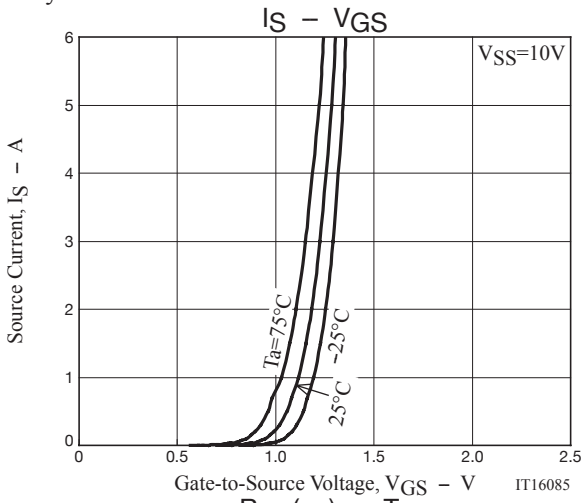

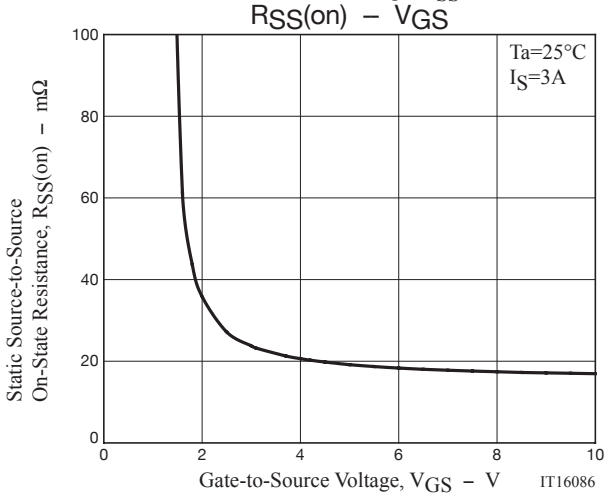

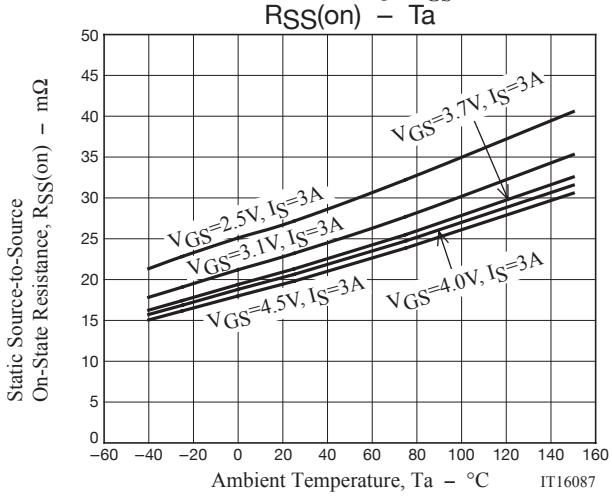

| yfs | – IS

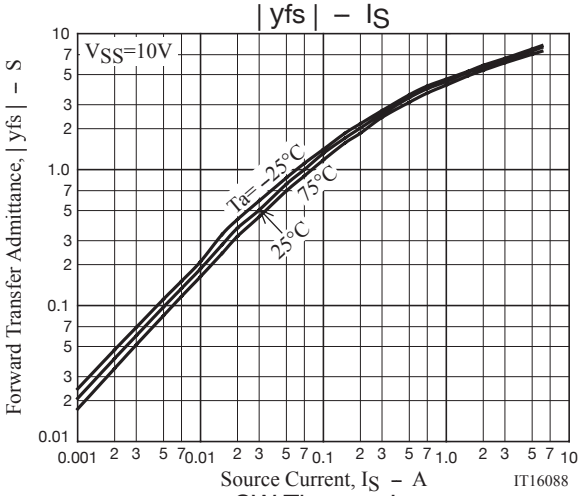

IS – VF(S-S)

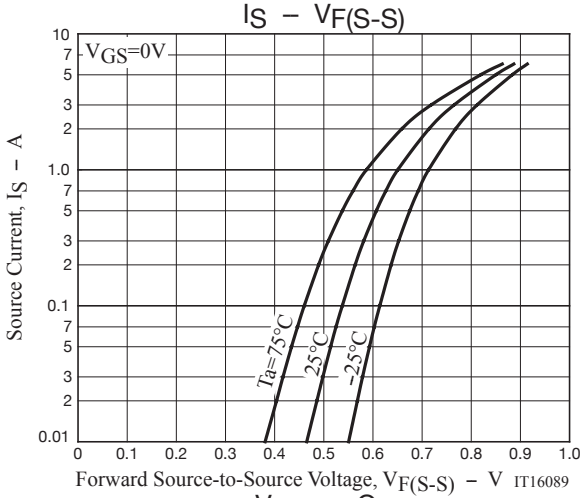

SW Time – IS

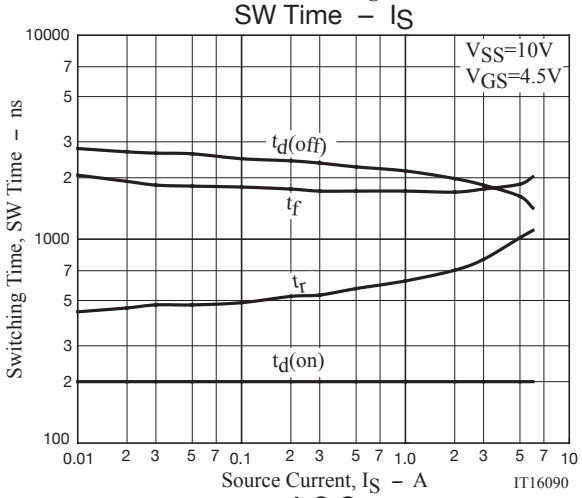

VGS – Qg

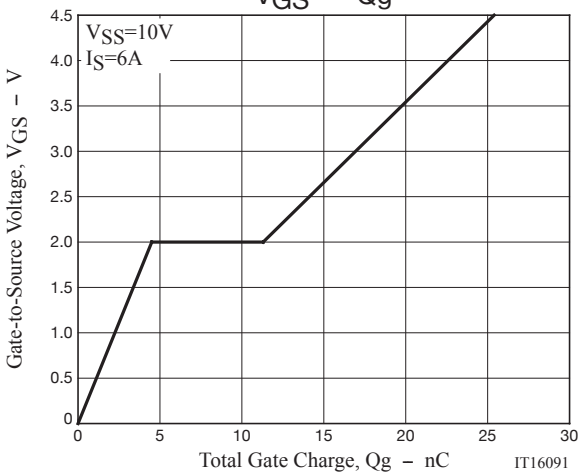

A S O

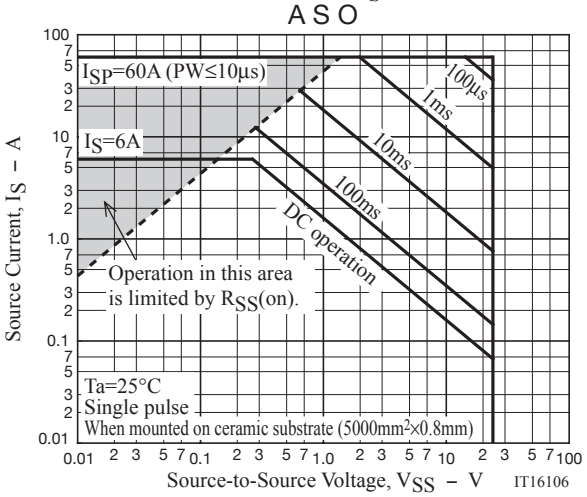

PT – Ta

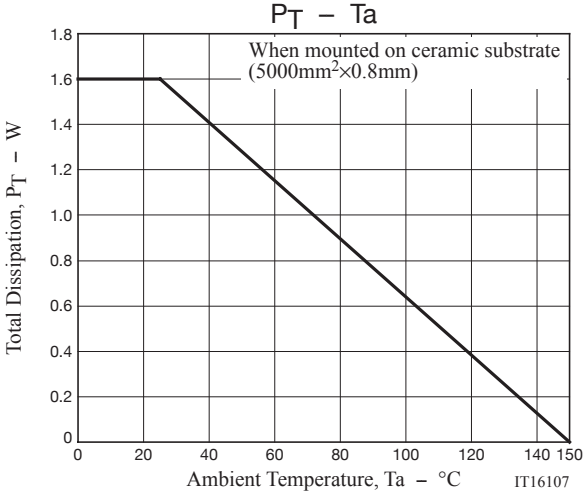

Outline Drawing

EFC4618R-P-TR

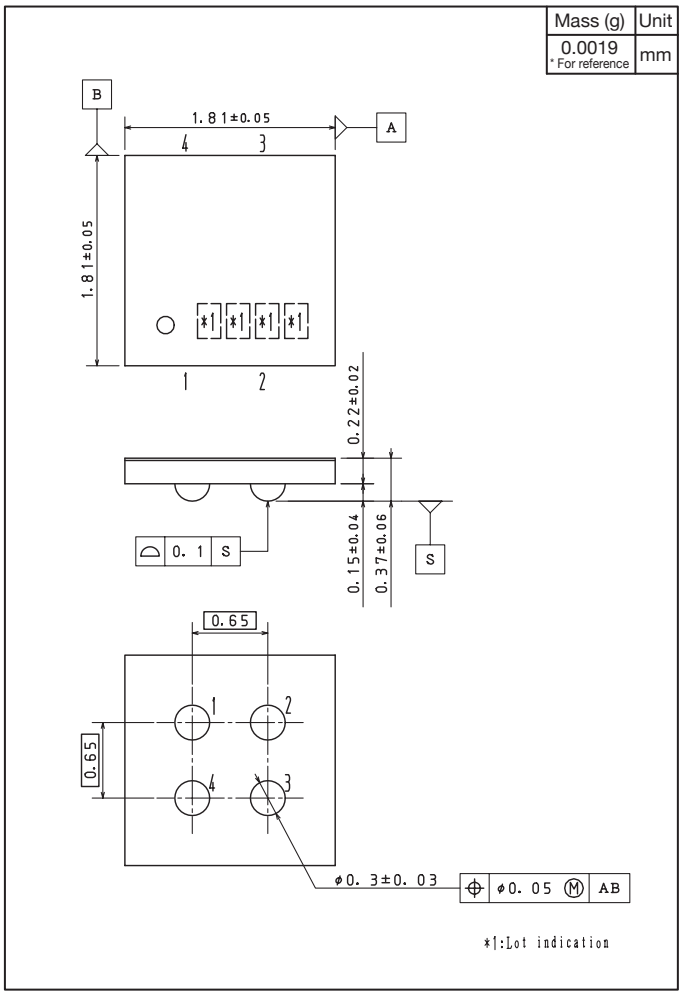

Land Pattern Example

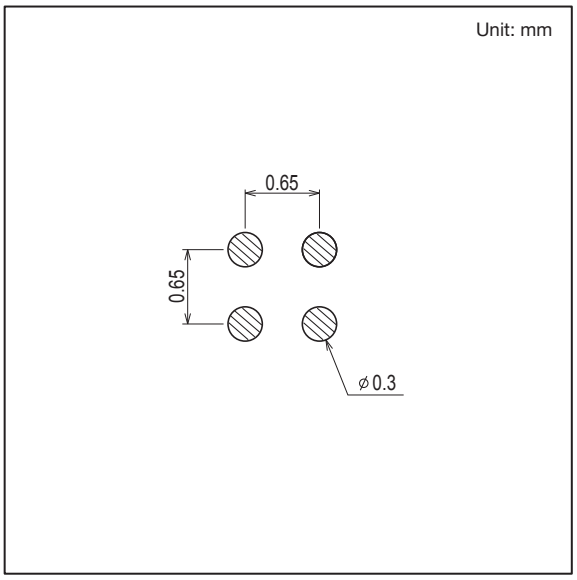

Note on usage : Since the EFC4618R-P is a MOSFET product, please avoid using this device in the vicinity of highly charged objects.

ON Semiconductor and the ON logo are registered trademarks of Semiconductor Components Industries, LLC (SCILLC) or its subsidiaries in the United States and/or other countries. SCILLC owns the rights to a number of patents, trademarks, copyrights, trade secrets, and other intellectual property. A listing of SCILLC's product/patent coverage may be accessed at www.onsemi.com/site/pdf/Patent-Marking.pdf . SCILLC reserves the right to make changes without further notice to any products herein. SCILLC makes no warranty, representation or guarantee regarding the suitability of its products for any particular purpose, nor does SCILLC assume any liability arising out of the application or use of any product or circuit, and specifically disclaims any and all liability, including without limitation special, consequential or incidental damages. "Typical" parameters which may be provided in SCILLC data sheets and/or specifications can and do vary in different applications and actual performance may vary over time. All operating parameters, including "Typicals" must be validated for each customer application by customer's technical experts. SCILLC does not convey any license under its patent rights nor the rights of others. SCILLC products are not designed, intended, or authorized for use as components in systems intended for surgical implant into the body, or other applications intended to support or sustain life, or for any other application in which the failure of the SCILLC product could create a situation where personal injury or death may occur. Should Buyer purchase or use SCILLC products for any such unintended or unauthorized application, Buyer shall indemnify and hold SCILLC and its officers, employees, subsidiaries, affiliates, and distributors harmless against all claims, costs, damages, and expenses, and reasonable attorney fees arising out of, directly or indirectly, any claim of personal injury or death associated with such unintended or unauthorized use, even if such claim alleges that SCILLC was negligent regarding the design or manufacture of the part. SCILLC is an Equal Opportunity/Affirmative Action Employer. This literature is subject to all applicable copyright laws and is not for resale in any manner.