EFB24-SR Damper Actuator

Modulating, Spring Return, AC 24 V/DC, for DC 2…10 V or 4…20 mA Control Signal



Torque min. 270 in-lb, for control of air dampers

Application

For fail-safe, modulating control of dampers in HVAC systems. Actuator sizing should be done in accordance with the damper manufacturer's specifications. The actuator is mounted directly to a damper shaft up to 1.05" in diameter by means of its universal clamp. A crank arm and several mounting brackets are available for applications where the actuator cannot be direct coupled to the damper shaft. The actuator operates in response to a DC 2...10 Vor, with the addition of a 500Ω resistor, a 4...20 mA control input from an electronic controller or positioner. A DC 2...10 V feedback signal is provided for position indication.

A common installation technique for control of multi-section dampers is to use the U5 position feedback of one actuator (Master) to control multiple actuators (Slaves). Belimo refers to this as Master/Slave control. The only requirement is that the actuators are installed on MECHANICALLY SEPARATE damper shafts.

Adaptation and Synchronization

An adaption can be triggered by manually rotating the direction of rotation switch TWO full cycles. Adaption will detect the applications mechanical end stops by driving to each stop. An adaption will scale the control signal input, position feedback voltage, and running time to the new working mechanical angle of rotation. It is good practice to initiate an adaption on each actuator when mounting and controlling EF..-SR.. actuators in Piggy-back mode.

If the manual override is used, with power applied, the actuator will perform a Synchronization upon release of the manual override hand crank. The actuator drives from the current control position to the synchronize reference of 0%. The actuator then drives back to the control position defined by the input signal.

Operation

The EF..24-SR series actuators provide true spring return operation for reliable failsafe application and positive close off on air tight dampers. The spring return system provides constant torque to the damper with, and without, power applied to the actuator. The EF..24-SR series provides 95° of rotation and is provided with a graduated position indicator showing 0° to 95°. The EF..24-SR uses a brushless DC motor which is controlled by an Application Specific Integrated Circuit (ASIC) and a microprocessor. The microprocessor provides the intelligence to the ASIC to provide a constant rotation rate and to know the actuator's exact fail-safe position. The ASIC monitors and controls the brushless DC motor's rotation and provides a digital rotation sensing function to prevent damage to the actuator in a stall condition. The actuator may be stalled anywhere in its normal rotation without the need of mechanical end switches. The EF..24-SR actuator is shipped at 5° (5° from full fail-safe) to provide automatic compression against damper gaskets for tight shut-off.

Installation Note: Use flexible metal conduit. Push the UL listed conduit fitting device over the actuator's cable to butt against the enclosure. Screw in conduit connector. Jacket the actuator's input wiring with UL listed flexible conduit. Properly terminate the conduit in a suitable junction box.

Technical Data	
Power Supply	24 VAC, ±20%, 50/60 Hz, 24 VDC, -10% / +20%
Power consumption in operation	8 W
Power consumption in rest position	4.5 W
Transformer sizing	14 VA (class 2 power source)
Shaft Diameter	1/2...1.05" round, centers on 3/4" with insert, 1.05" without insert
Electrical Connection	18 GA appliance cable, 3 ft [1 m], with 1/2" conduit connector
Overload Protection	electronic throughout 0...95° rotation
Electrical Protection	actuators are double insulated
Operating Range	2...10 V, 4...20 mA w/ ZG-R01 (500 Ω, 1/4 W resistor)
Input Impedance	100 kΩ for 2...10 V (0.1 mA), 500 Ω for 4...20 mA
Position Feedback	2...10 V, Max. 0.5 mA
Angle of rotation	Max. 95°, adjustable with mechanical end stop, 35...95°
Torque motor	270 in-lb [30 Nm]
Direction of motion motor	selectable with switch 0/1
Direction of motion fail-safe	reversible with cw/ccw mounting
Position indication	Mechanical
Manual override	5 mm hex crank (3/16" Allen), supplied
Running Time (Motor)	95 s
Running time fail-safe	<20 s @ -4...122°F [-20...50°C], <60 s @ -22°F [-30°C]
Angle of rotation adaptation	manual, by two full cycles of 0/1 switch
Ambient humidity	max. 95% r.H., non-condensing
Ambient temperature	-22...122°F [-30...50°C]
Storage temperature	-40...176°F [-40...80°C]
Degree of Protection	IP54, NEMA 2, UL Enclosure Type 2
Housing material	Die cast aluminium and plastic casing
Agency Listing	cULus acc. to UL60730-1A/-2-14, CAN/CSA E60730-1:02, CE acc. to 2014/30/EU
Noise level, motor	56 dB(A)
Noise level, fail-safe	71 dB(A)
Servicing	maintenance-free
Quality Standard	ISO 9001
Weight	12 lb [5.3 kg]

†Rated Impulse Voltage 800V, Type of action 1.AA, Control Pollution Degree 3

Date created, 08/12/2020 - Subject to change. © Belimo Aircontrols (USA), Inc.

EFB24-SR Damper Actuator

Modulating, Spring Return, AC 24 V/DC, for DC 2…10 V or 4…20 mA Control Signal

Dimensions (Inches[mm])

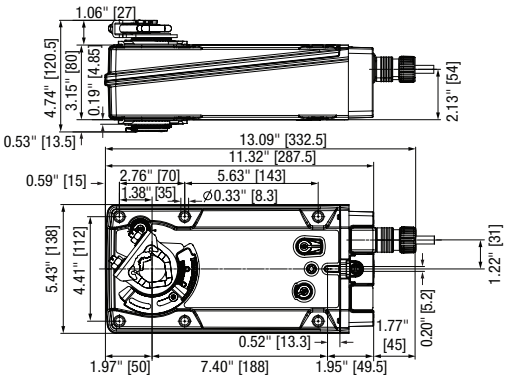

Date created, 08/12/2020 - Subject to change. © Belimo Aircontrols (USA), Inc.

EFB24-SR Damper Actuator

Modulating, Spring Return, AC 24 V/DC, for DC 2...10 V or 4...20 mA Control Signal

Accessories	
AV8-25	Shaft extension
EF-P	Anti-rotation bracket EFB(X)/GKB(X)/GMB(X).
IND-EFB	End stop indicator
K9-2	Shaft clamp reversible
KG10A	Ball joint
KH10	Damper crank arm
KH-EFB	Actuator arm
SH10	Push rod for KG10A ball joint (36" L, 3/8" diameter).
TOOL-07	13 mm wrench.
ZG-100	Univ. right angle bracket 17"x11-1/8"x6" (HxWxbase).
ZG-120	Jackshaft mounting bracket.
ZG-DC1	Damper clip for damper blade, 3.5" width.
ZG-DC2	Damper clip for damper blade, 6" width.
ZG-EFB	Mounting kit for linkage operation
ZG-JSA-3	1.05" diameter jackshaft adaptor (12" L).
IRM-100	Input rescaling module for modulating actuators.
P475	Shaft mount, non-Mercury aux. switch for 1/2" dia. shafts.
P475-1	Shaft mount, non-Mercury aux. switch for 1" dia. shafts.
PS-100	Low voltage and control signal simulator.
PTA-250	Pulse width modulation interface for modulating actuators.
SGA24	Positioners suitable for use with the modulating damper actuators LM..A-SR, NM..A-SR, SM..A-SR and GM..A-SR
SGF24	Positioners suitable for use with the modulating damper actuators LM..A-SR, NM..A-SR, SM..A-SR and GM..A-SR
TF-CC US	Cable conduit connector, 1/2".
ZG-R01	4 to 20 mA adaptor, 500Ω, 1/4 W resistor w 6" pigtail wires.
ZG-R02	50% voltage divider kit (resistors with wires).
ZG-SGF	Mounting plate for SGF.
ZG-X40	120 to 24 VAC, 40 VA transformer.

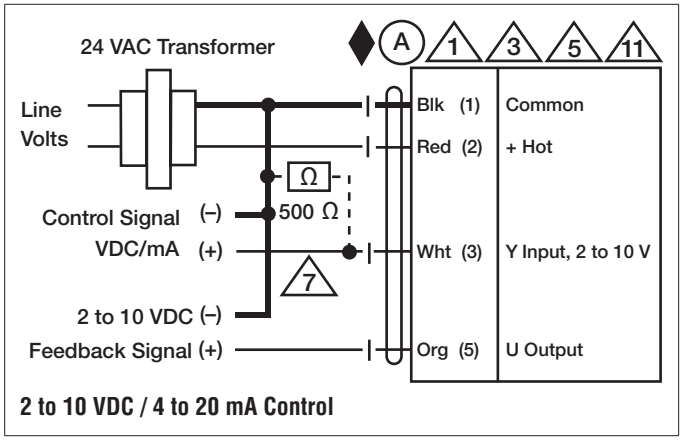

2 to 10 VDC / 4 to 20 mA Control

Typical Specification

Spring return control damper actuators shall be direct coupled type which require no crank arm and linkage and be capable of direct mounting to a jackshaft up to a 1.05" diameter. The actuator must provide modulating damper control in response to a 2 to 10 VDC or, with the addition of a 500Ω resistor, a 4 to 20 mA control input from an electronic controller or positioner. The actuators must be designed so that they may be used for either clockwise or counter clockwise fail-safe operation. Actuators shall use a brushless DC motor controlled by a microprocessor and be protected from overload at all angles of rotation. Run time shall be constant, and independent of torque. A 2 to 10 VDC feedback signal shall be provided for position feedback. Actuators with auxiliary switches must be constructed to meet the requirements for Double Insulation so an electrical ground is not required to meet agency listings. Actuators shall be cULus listed and have a 5 year warranty, and be manufactured under ISO 9001 International Quality Control Standards. Actuators shall be as manufactured by Belimo.

Date created, 08/12/2020 - Subject to change. © Belimo Aircontrols (USA), Inc.

Wiring Diagrams

WARNING! LIVE ELECTRICAL COMPONENTS!

During installation, testing, servicing and troubleshooting of this product, it may be necessary to work with live electrical components. Have a qualified licensed electrician or other individual who has been properly trained in handling live electrical components perform these tasks. Failure to follow all electrical safety precautions when exposed to live electrical components could result in death or serious injury.

Meets cULus requirements without the need of an electrical ground connection.

A Actuators with appliance cables are numbered.

1 Provide overload protection and disconnect as required.

3 Actuators may also be powered by 24 VDC.

5 Only connect common to negative (-) leg of control circuits.

7 A 500 Ω resistor (ZG-R01) converts the 4 to 20 mA control signal to 2 to 10 VDC.

11 Actuators may be connected in parallel if not mechanically linked. Power consumption and input impedance must be observed.

Date created, 08/12/2020 - Subject to change. © Belimo Aircontrols (USA), Inc.