Type: EEH157

◆ Product Description

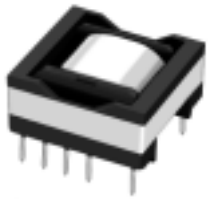

・15.8×15.6mm Max.(L×W), 8.5Max. Height.
・In addition to the typical versions of parameters shown here,
custom parameters are available to meet your exact requirements.

◆ Feature

・Max. Operating frequency 300kHz,Max. Operating Power 7.6W(300kHz).
・Ideally used in AC adapter for cellular phone, Portable equipment.
・Ideally used in PoE transformer.
・RoHS Compliance

◆ Dimensions (mm)

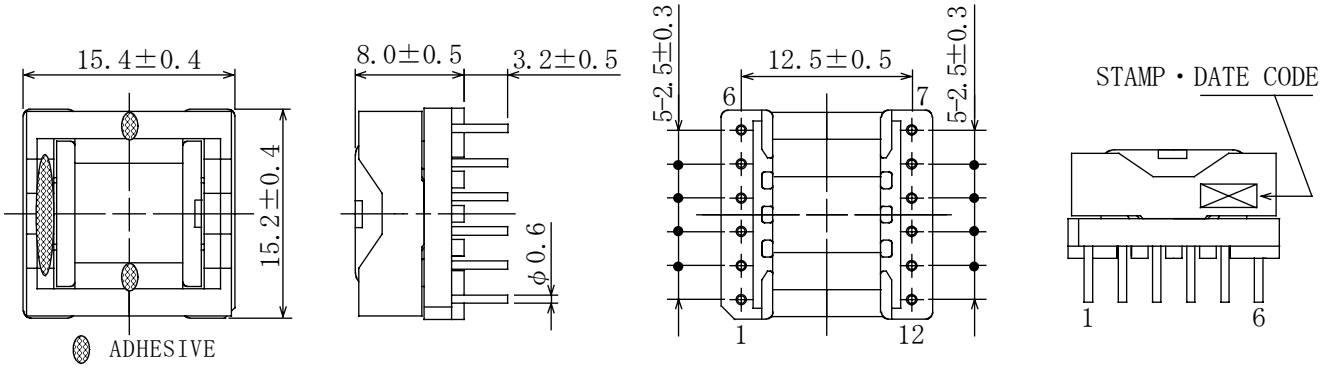

◆ Schematics (Bottom)

For General Power Transformer

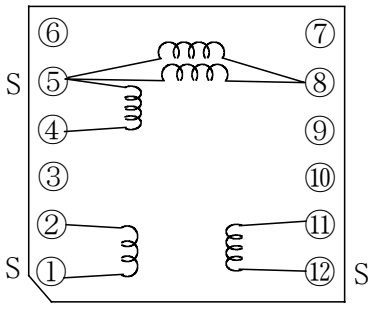

"S" indicates winding start.

For Power over Ethernet Transformer

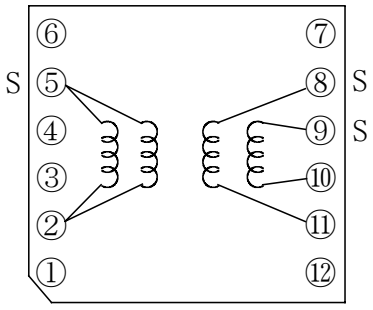

"S" indicates winding start.

Type: EEH157

◆ Specification (For General Power Transformer)

Sample No.	Inductance (1-2) 10kHz/1V	D.C.R. (5-8) (mΩ Max.)	Hi-pot (1,2,4,5,8-11,12) (50/60Hz)
4390-T160	1,75mH ± 25%	250	AC 500Vrms/1min.

◆ Specification (For Power over Ethernet Transformer)

Sample No.	Turns Ratio (Pri:Sec:Aux)	Primary Inductance 1kHz/1V	Pri-Sec. Insulation	Leakage L (μH Max.)	D.C.R. (mΩ Max.)		
					Pri.	Aux.	Sec.
4390-T143	1:0.429:0.429	150μH±25%	DC500V (2mA,1min)	5.0	170	90	90