Stacked Coin Type

Discontinued

Series : **SG** Low temperature assured product



Features

- Endurance : +70 °C 1000 h
- Category temperature range : –40 °C to +70 °C
- Maximum height of 6.5 mm (H Terminal)
- RoHS compliant

Recommended applications

- Memory back-up for video and audio equipment, cameras, telephones, printers, data terminals, rice cookers and intelligent remote controls

Specifications

Category temp. range	–40 °C to +70 °C	
Maximum operating voltage	5.5 V.DC	
Nominal cap.range	0.47 F to 1.5 F	
Characteristics at low temperature	Capacitance change	±30 % of initial measured value at +20 °C (at –40 °C)
	Internal resistance	≦ 7 times of initial measured value at +20 °C (at –40 °C)
Endurance	After 1000 hours application of 5.5 V.DC at +70 °C, the capacitor shall meet the following limits.	
	Capacitance change	±30 % of initial measured value
	Internal resistance	≦ 4 times of initial specified value
Shelf life	After 1000 hours storage at +70 °C without load, the capacitor shall meet the specified limits for Endurance.	

Dimensions in mm(not to scale)

Terminal: V

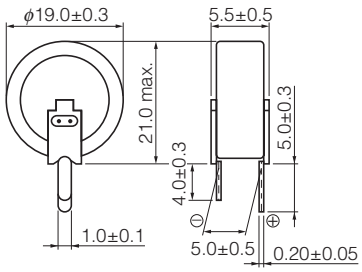

(Unit : mm)

Terminal: H

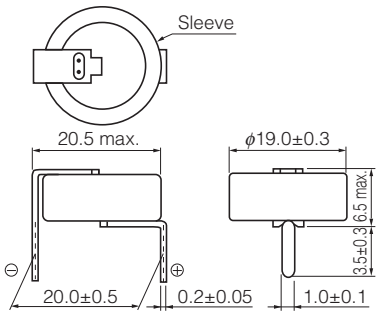

(Unit : mm)

Characteristics list

Maximum operating voltage (V.DC)	Capacitance (F)	Capacitance tolerance (F)	Internal resistance (Initial specified value) (Ω) at 1kHz	Recommended discharge current (mA)	Part number	Mass (Reference value) (g)	Min. packaging q'ty (pcs)
5.5	0.47	0.376 to 1.41	≦ 30	1 or less	EECS5R5( )474N	4.1	100
	1.0	0.80 to 1.80	≦ 30	1 or less	EECS5R5( )105N	4.1	100
	1.5	1.20 to 2.70	≦ 30	1 or less	EECS5R5( )155N	4.2	100

( ) Please use V or H, to indicate the terminal style.
Note : Do not use reflow soldering. (IR, Atmosphere heating methods, etc.)
Please refer to the page of "Application guidelines".

Design and specifications are each subject to change without notice. Ask factory for the current technical specifications before purchase and/or use.
Should a safety concern arise regarding this product, please be sure to contact us immediately.

Guidelines and precautions regarding the technical information and use of our products described in this online catalog.

- If you want to use our products described in this online catalog for applications requiring special qualities or reliability, or for applications where the failure or malfunction of the products may directly jeopardize human life or potentially cause personal injury (e.g. aircraft and aerospace equipment, traffic and transportation equipment, combustion equipment, medical equipment, accident prevention, anti-crime equipment, and/or safety equipment), it is necessary to verify whether the specifications of our products fit to such applications. Please ensure that you will ask and check with our inquiry desk as to whether the specifications of our products fit to such applications use before you use our products.

- The quality and performance of our products as described in this online catalog only apply to our products when used in isolation. Therefore, please ensure you evaluate and verify our products under the specific circumstances in which our products are assembled in your own products and in which our products will actually be used.

- If you use our products in equipment that requires a high degree of reliability, regardless of the application, it is recommended that you set up protection circuits and redundancy circuits in order to ensure safety of your equipment.

- The products and product specifications described in this online catalog are subject to change for improvement without prior notice. Therefore, please be sure to request and confirm the latest product specifications which explain the specifications of our products in detail, before you finalize the design of your applications, purchase, or use our products.

- The technical information in this online catalog provides examples of our products' typical operations and application circuits. We do not guarantee the non-infringement of third party's intellectual property rights and we do not grant any license, right, or interest in our intellectual property.

- If any of our products, product specifications and/or technical information in this online catalog is to be exported or provided to non-residents, the laws and regulations of the exporting country, especially with regard to security and export control, shall be observed.

<Regarding the Certificate of Compliance with the EU RoHS Directive/REACH Regulations>

- The switchover date for compliance with the RoHS Directive/REACH Regulations varies depending on the part number or series of our products.

- When you use the inventory of our products for which it is unclear whether those products are compliant with the RoHS Directive/REACH Regulation, please select "Sales Inquiry" in the website inquiry form and contact us.

We do not take any responsibility for the use of our products outside the scope of the specifications, descriptions, guidelines and precautions described in this online catalog.

Notices

■ Applicable laws and regulations

・This product complies with the RoHS Directive (Restriction of the use of certain hazardous substances in electrical and electronic equipment (DIRECTIVE 2011/65/EU and (EU)2015/863)).
・No Ozone Depleting Chemicals(ODC's), controlled under the Montreal Protocol Agreement, are used in producing this product.
We do not use PBBs or PBDEs as brominated flame retardants.
・Export procedure which followed export related regulations, such as foreign exchange and a foreign trade method, on the occasion of export of this product.
・These products are not dangerous goods on the transportation as identified by UN(United Nations) numbers or UN classification.

■ Limited applications

・This capacitor is designed to be used for electronics circuits such as audio/visual equipment, home appliances, computers and other office equipment, optical equipment, measuring equipment.
・High reliability and safety are required [be / a possibility that incorrect operation of this product may do harm to a human life or property] more. When use is considered by the use, the delivery specifications which suited the use separately need to be exchanged.

■ Intellectual property rights and licenses

・The technical information in this specification provides examples of our products' typical operations and application circuits. We do not guarantee the non-infringement of third party's intellectual property rights and we do not grant any license, right, or interest in our intellectual property.

Items to be observed

■ For specification

・This specification guarantees the quality and performance of the product as individual components.
The durability differs depending on the environment and the conditions of usage.
Before use, check and evaluate their compatibility with actual conditions when installed in the products.
When safety requirements cannot be satisfied in your technical examination, inform us immediately.
・Do not use the products beyond the specifications described in this document.

■ Upon application to products where safety is regarded as important

Install the following systems for a failsafe design to ensure safety if these products are to be used in equipment where a defect in these products may cause the loss of human life or other signification damage, such as damage to vehicles (automobile, train, vessel), traffic lights, medical equipment, aerospace equipment, electric heating appliances, combustion/ gas equipment, rotating rotating equipment, and disaster/crime prevention equipment.

(1) The system is equipped with a protection circuit and protection device.
(2) The system is equipped with a redundant circuit or other system to prevent an unsafe status in the event of a single fault.

■ Conditions of use

・Before using the products, carefully check the effects on their quality and performance, and determined whether or not they can be used. These products are designed and manufactured for general-purpose and standard use in general electronic equipment. These products are not intended for use in the following special conditions.

(1) In liquid, such as Water, Oil, Chemicals, or Organic solvent.
(2) In direct sunlight, outdoors, or in dust.
(3) In vapor, such as dew condensation water of resistive element, or water leakage, salty air, or air with a high concentration corrosive gas, such as Cl_2, H_2S, NH_3, SO_2, or NOx.
(4) In an environment where strong static electricity or electromagnetic waves exist.
(5) Mounting or placing heat-generating components or inflammables, such as vinyl-coated wires, near these products.
(6) Sealing or coating of these products or a printed circuit board on which these products are mounted, with resin and other material.
(7) Using resolvent, water or water-soluble cleaner for flux cleaning agent after soldering. (In particular, when using water or a water-soluble cleaning agent, be careful not to leave water residues)
(8) Using in the atmosphere where strays acid or alkaline.
(9) Using in the atmosphere where there are excessive vibration and shock.

・Please arrange circuit design for preventing impulse or transitional voltage.
Do not apply voltage, which exceeds the full rated voltage when the capacitors receive impulse voltage, instantaneous high voltage, high pulse voltage etc.
・Our products there is a product are using an electrolyte solution. Therefore, misuse can result in rapid deterioration of characteristics and functions of each product. Electrolyte leakage damages printed circuit and affects performance, characteristics, and functions of customer system.

⚠ Application Guidelines (Gold Capacitor)

1. Circuit design

1.1 Product Life

The life of an electric double layer capacitor is limited. Its capacitance will decrease and its internal resistance will increase over time.

The life of a capacitor greatly depends on the ambient temperature, humidity, applied voltage and discharging currents. Capacitor life can be extended when these parameters are set well below the ratings.

The guaranteed durability of electric double-layer capacitors is between 1000 hours at 70 °C and 6000 hours at 85 °C. depending on product series. Generally, it is 1000 hours at 70 °C. The life of the capacitor is guaranteed to be 16000 hours at a normal temperature (30 °C) by applying the acceleration double for every 10 °C. Please choose the product that is suitable for the reliability that you need.

If your application incorporates this capacitor over a long period of time, then check it periodically and replace it when necessary.

1.2 Polarity and voltage

Capacitors have polarities.

Do not apply a reverse or AC voltage. If a reversed voltage is applied to a capacitor for a long period of time, then its life will be reduced and critical failures such as electrolyte leakage might occur.

Do not apply an over-voltage (a voltage exceeding the rated voltage).

If voltage exceeding the rating is applied to the capacitor for a long time, then its life will be reduced and critical failures such as electrolyte leakage or physical damage due to gas generated by electrochemical reaction or explosion might occur.

1.3 Circuits though which ripple currents pass

When using a capacitor in a circuit through which ripple currents pass, please note following matters.

(1) The internal resistance of electric double-layer capacitors is higher than that of electrolytic capacitors. Electric double-layer capacitors may generate heat due to ripple currents.

(2) Please do not exceed the maximum operating voltage when the voltage changes from ripple.

(3) Because internal resistance is high, the gold capacitor is not basically suitable for the absorption of ripple current.

1.4 Ambient temperature and product life

Capacitor life is affected by usage temperatures. Generally speaking, capacitor life is approximately doubled when the temperature is decreased by 10 °C. Therefore, lower the usage temperature as much as possible. Using capacitors beyond the guaranteed range might cause rapid deterioration of their characteristics and cause them to break down. The temperature referred to here includes the ambient temperature within the equipment, the heat produced by heat generating devices (power transistor, resistors, etc.), self-heating due to ripple currents, etc. Take all of these factors into consideration when checking the capacitor's temperature.

Do not place any heat generating devices on the back of the capacitors. Life acceleration can be calculated with the following equation :

$$L_2 = L_1 \times 2^{\left(\frac{T_1 - T_2}{10}\right)}$$

L_1 : Life at temperature T_1 °C (h)
L_2 : Life at temperature T_2 °C (h)
T_1 : Category s upper limit temperature
T_2 : Ambient temperature to calculate the life + heat generation due to ripple current (°C)

✻ Humidity also affects the capacitor's life. When using capacitors outside the following conditions, please contact us. A temperature at +55 °C and a relative humidity of 90 % to 95% for 500 hours.

Series	Max. Discharging Current				
	0.047 F or less	0.1 F to 0.33 F	0.47 F to 1.5 F	3.3 F to 4.7 F	10 F to 100 F
SG/SD/SE/NF/F	200 µA	300 µA	1 mA	—	—
RF (–40 °C, –25 °C)	—	300 µA, 3 mA	1 mA, 20 mA	—	—
LF (–40 °C)	—	—	1 mA	—	—
RG (–40 °C, –25 °C)	—	300 µA, 1 mA	1 mA, 20 mA	—	—

✻ The result that a very long term backup can be expected in calculation might be obtained by use conditions. However, please consider checking regularly and exchanging it when using it for the set that long-term reliability is basically demanded from the Gold Capacitor.

1.5 Voltage drop

Pay particular attention to the instantaneous working current and the voltage drop due to the capacitor's internal resistance when used in backup mode. The discharging current level is different depending on the capacitor's internal resistance. Use a capacitor with a discharging current below what is specified by the corresponding capacitor.

1.6 Series connection

When connecting capacitors in series, add a bleeder resistor in parallel with each capacitor by taking the leakage current into consideration so that the balance of voltages is not disrupted.

✻ Please present use condition about HZ/HW/HL series, and please contact us.

1.7 Electrolyte is used in the products

Electrolyte is used in the capacitors. Electrolyte leakage will damage printed circuit boards and can affect their performance, characteristics, and functions.

1.8 External sleeve

The external sleeve is not electrical insulation, and thus capacitors should not be used in an environment that requires electrical insulation. The sleeve is covered only for showing ratings.

2. Mounting

2.1 Heat stress at the soldering

When soldering a capacitor to a printed circuit board, excessive heat stress could cause the deterioration of the capacitor's electrical characteristics. For example the integrity of the seal can be compromised causing the electrolyte to leak, and short circuits could occur in addition to and failure of the appearance.

Please observe the following guidelines.

(1) Manual soldering

Do not touch the capacitor body with a soldering iron. Solder the capacitor using a soldering tip temperature of 350 °C or less for 4 seconds or less. Solder a the capacitor three times or less at intervals of 15 seconds or more.

(2) Flow soldering

1) Do not dip the body of the products into a soldering bath.
2) Keep the product's surface temperature at or below 100 °C for no more than 60 seconds (the peak 105 °C) when soldering. Please refer to the chart at right to set soldering temperature and time. It is recommended to check the product temperature before you use.
3) The terminals of the NF/F/RF/LF type are designed so the bottom of the product floats from the PWB. This is to protect against heat stress during soldering. Do not touch the bottom of the product directly to the PWB.

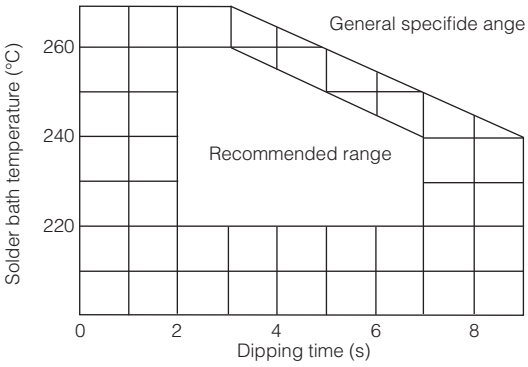

Pre-heating temperature : 110 °C or under(on the surface of circuit)
: 100 °C or under(on the surface of capacitor)
Pre-heating time : 60 seconds or under
Board thickness : 0.8 mm or more

(3) Other heat stress

1) Keep the product's surface temperature at or below 100 °C for no more than 60 seconds (the peak 105 °C) when applying heat to bake the PWB or fixing resin, etc.The capacitor voltage must be 0.3 V or less.
2) Do not use a product more than once after it has been mounted on the PWB. Excessive heat stress is applied when detaching it from the PWB. Please observe "(1) Manual soldering" when you adjusting it.
3) Be sure that excessive heat stress is not applied to the Gold capacitor when other parts in its surroundings of the Gold capacitor are detached or adjusted.

(4) Others

1) The lead wires and terminals are plated for solderability. Rasping or filing lead wires or terminals might damage the plating layer and degrade the solderability.
2) Do not apply a large mechanical force to the lead wires or terminals. Otherwise, they may break or come off or the capacitor characteristics may be damaged.
3) There is a possibility that the sealing performance of the product is deteriorated if a coating material that contains an organic solvent is used.

2.2 Circuit Design

Do not set wiring pattern directly under the mounted capacitor, and pass between terminals. If the electrolyte leaks, short circuit might occur and tracking or migrations are anticipated. If a capacitor is directly touching a PWB, then the bottom of the capacitorand the circuit pattern may short-circuit. On PWBs, blowing flux or solder may cause the capacitor's external sleeve to break or shrink, potentially affecting the internal structure. In addition, please refer to application guidelines for the aluminum electrolytic capacitor.

2.3 Residual voltage

Gold Capacitors can hold a large charge and could have residual voltage. Therefore, some electronic components with a low withstand voltage, such as semi-conductors, might be damaged.

2.4 Circuit board cleaning

Apply the following conditions for flux cleaning after soldering. (Excepted for NF/F/RF/LF series)
Please examine the SG/SD/RG series when washing is necessary.

Temperature : 60 °C or less
Duraiton : 5 minutes or less

Rinse sufficiently and dry the boards.
[Recommended cleaning solvents include]
Pine Alpha ST-100s, Sunelec B-12, DK be-clear CW-5790, Aqua Cleaner 210SEP, Cold Cleaner P3-375, Cllear-th-ru 750H, Clean-thru 750L, Clean-thru 710M, Techno Cleaner219, Techno Care FRW-17, Techno Care FRW-1, Techno Care FRV1

- Consult with us if you are using a solvent other than any of those listed above or Deionized water.
- The uses of ozone depleting cleaning agents is not recommended in the interest protecting the environment.

3. Precautions for using equipment

Avoid using mounting equipment in environments where :
(1) Capacitors are exposed to water, salt water or oil.
(2) Capacitors are exposed to direct sunlight.
(3) Capacitors are exposed to high temperature and humidity where water can condense on the capacitor surface.
(4) Capacitors are subject to various active gases.
(5) Capacitors are exposed to acidic or alkaline environments.
(6) Capacitors are subject to high-frequency induction.
(7)Capacitors are subject to excessive vibrations or mechanical impact.
A brown excretion might be caused around the sealing, depending on the conditions of use. This excretion is insulation and does not. have influence on the electrical characteristics.

4. Maintenance Precautions

Periodically check capacitors used in industrial equipment. When checking and maintaining capacitors, turn off the equipment and discharge the capacitors beforehand. Do not apply stress to the capacitor lead terminals.
Periodically check the following items.
1) Significant appearance abnormalities (deformation, electrolyte leakage, etc.)
2) Electrical characteristics (described in the catalog or delivery specifications)
If any abnormalities are found, then replace the capacitors or take appropriate actions.

5. Emergency procedures

If the capacitors generate heat, then smoke may come out of the exterior resin. Under these conditions turn off the equipment immediately and stop using it.
Do not place your face or hands close to the capacitor, burns might be caused.

6. Storage

Do not store capacitors in a high-temperature or high-humidity environment. Store capacitors at a room temperature of 5 to 35 °C and a relative humidity of 85 % or less. (Recommended storage term: 1year or less.)
Store capacitors in their packaging as long as possible. Avoid storing capacitors under the following conditions.
(1) Exposed to water, high temperatures or humidity, or when condensation can occurs.
(2) Exposed to oil or in environments filled with gaseous oil contents.
(3) Exposed to salt water or environments filled with saline substances.
(4) In environments filled with harmful gases
(hydrogen disulfide, sulfurous acid, nitrous acid, chlorine, bromine, bromomethane, etc.)
(5) In environments filled with harmful alkaline gases such as ammonia.
(6) Exposed to acid or alkaline solvents.
(7) Exposed to direct sunlight, ozone, ultraviolet or radial rays.
(8) Exposed to vibration or mechanical impact.

7. Discarding

Dispose of capacitors as industrial waste. They are comprised of various metals and resin.

The precautions for the use of Electric Double Layer Capacitors (Gold Capacitors) follow the “Precautionary guidelines for the use of fixed Electric Double Layer Capacitors for electronic equipment”, RCR-2370C issued by EIAJ in July 2008. Please refer to the above guidelines for details.