Photomicrosensor (Transmissive)
EE-SX1096

■ Dimensions

Note: All units are in millimeters unless otherwise indicated.

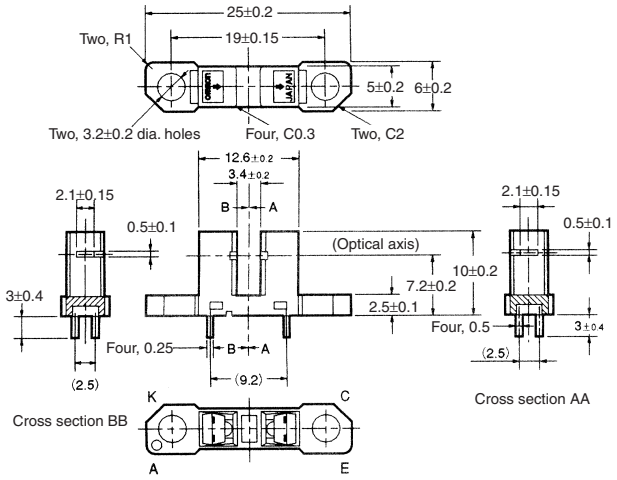

Internal Circuit

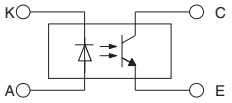

Terminal No.	Name
A	Anode
K	Cathode
C	Collector
E	Emitter

Unless otherwise specified, the tolerances are as shown below.

Dimensions	Tolerance
3 mm max.	±0.3
3 < mm ≤ 6	±0.375
6 < mm ≤ 10	±0.45
10 < mm ≤ 18	±0.55
18 < mm ≤ 30	±0.65

■ Features

- General-purpose model with a 3.4-mm-wide slot.
- Mounts to PCBs or connects to connectors.
- High resolution with a 0.5-mm-wide aperture.
- With a horizontal sensing slot.
- OMRON's XK8-series Connectors can be connected without soldering. Contact your OMRON representative for information on obtaining XK8-series Connectors.
- RoHS Compliant.

■ Absolute Maximum Ratings (Ta = 25° C)

Item		Symbol	Rated value
Emitter	**Forward current**	I_F	50 mA (see note 1)
	Pulse forward current	I_{FP}	1 A (see note 2)
	Reverse voltage	V_R	4 V
Detector	**Collector–Emitter voltage**	V_{CEO}	30 V
	Emitter–Collector voltage	V_{ECO}	---
	Collector current	I_C	20 mA
	Collector dissipation	P_C	100 mW (see note 1)
Ambient temperature	**Operating**	Topr	–25° C to 85° C
	Storage	Tstg	–30° C to 100° C
Soldering temperature		Tsol	260° C (see note 3)

Note: 1. Refer to the temperature rating chart if the ambient temperature exceeds 25° C.
2. The pulse width is 10 μs maximum with a frequency of 100 Hz.
3. Complete soldering within 10 seconds.

■ Ordering Information

Description	Model
Photomicrosensor (transmissive)	**EE-SX1096**

■ Electrical and Optical Characteristics (Ta = 25° C)

Item		Symbol	Value	Condition
Emitter	**Forward voltage**	V_F	1.2 V typ., 1.5 V max.	I_F = 30 mA
	Reverse current	I_R	0.01 μA typ., 10 μA max.	V_R = 4 V
	Peak emission wavelength	λ_P	940 nm typ.	I_F = 20 mA
Detector	**Light current**	I_L	0.5 mA min., 14 mA max.	I_F = 20 mA, V_{CE} = 10 V
	Dark current	I_D	2 nA typ., 200 nA max.	V_{CE} = 10 V, 0 ℓx
	Leakage current	I_{LEAK}	---	---
	Collector–Emitter saturated voltage	V_{CE} (sat)	0.1 V typ., 0.4 V max.	I_F = 20 mA, I_L = 0.1 mA
	Peak spectral sensitivity wavelength	λ_P	850 nm typ.	V_{CE} = 10 V
Rising time		tr	4 μs typ.	V_{CC} = 5 V, R_L = 100 Ω, I_L = 5 mA
Falling time		tf	4 μs typ.	V_{CC} = 5 V, R_L = 100 Ω, I_L = 5 mA

■ Engineering Data

Forward Current vs. Collector Dissipation Temperature Rating

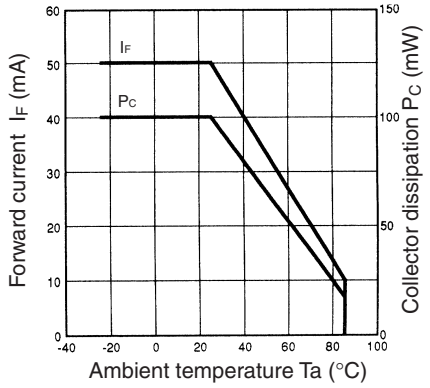

Forward Current vs. Forward Voltage Characteristics (Typical)

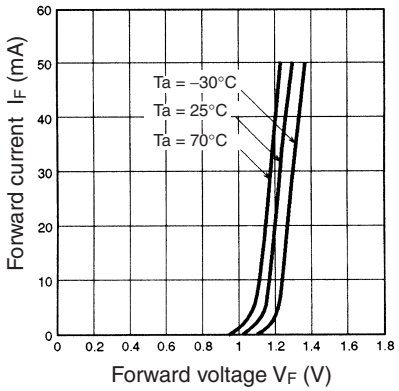

Light Current vs. Forward Current Characteristics (Typical)

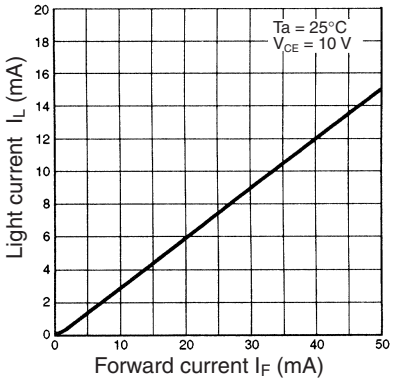

Light Current vs. Collector–Emitter Voltage Characteristics (Typical)

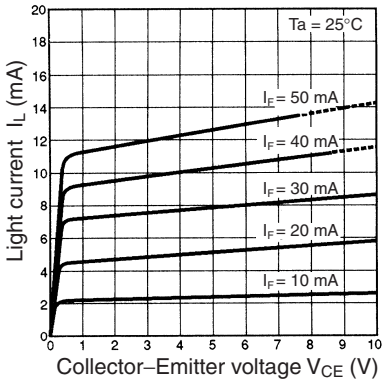

Relative Light Current vs. Ambient Temperature Characteristics (Typical)

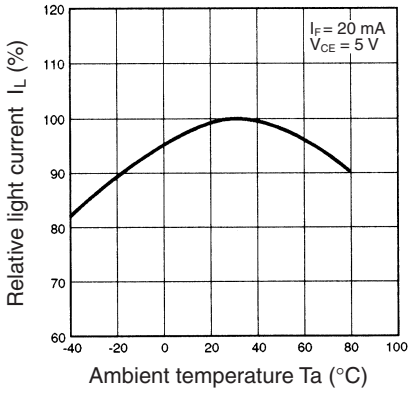

Dark Current vs. Ambient Temperature Characteristics (Typical)

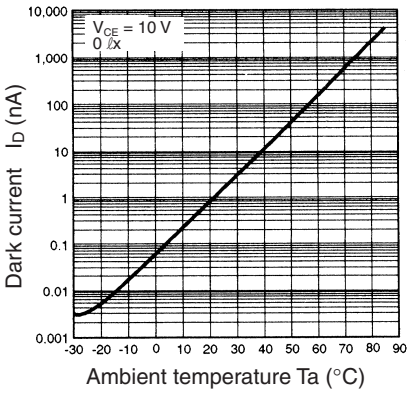

Response Time vs. Load Resistance Characteristics (Typical)

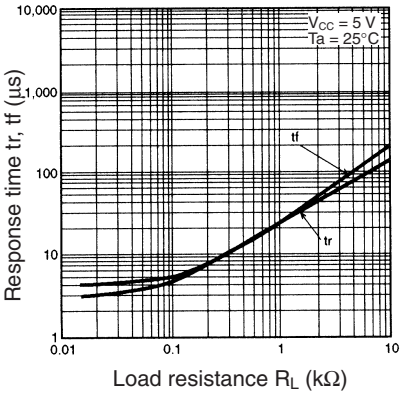

Sensing Position Characteristics (Typical)

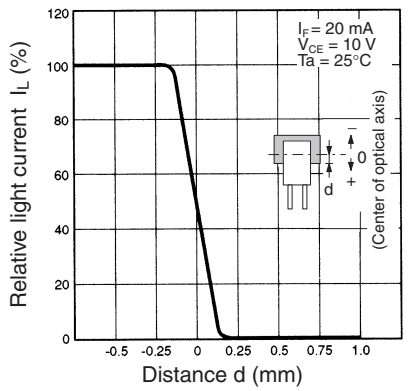

Response Time Measurement Circuit

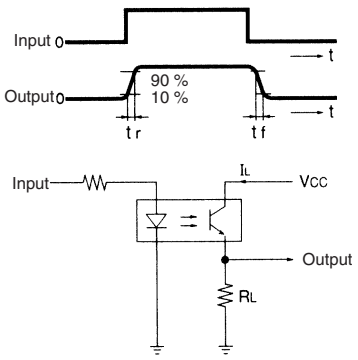

Omron Electronic Components, LLC

Terms and Conditions of Sales

I. GENERAL

1. Definitions: The words used herein are defined as follows.
   (a) Terms: These terms and conditions
   (b) Seller: Omron Electronic Components LLC and its subsidiaries
   (c) Buyer: The buyer of Products, including any end user in section III through VI
   (d) Products: Products and/or services of Seller
   (e) Including: Including without limitation
2. Offer; Acceptance: These Terms are deemed part of all quotations, acknowledgments, invoices, purchase orders and other documents, whether electronic or in writing, relating to the sale of Products by Seller. Seller hereby objects to any Terms proposed in Buyer's purchase order or other documents which are inconsistent with, or in addition to, these Terms.
3. Distributor: Any distributor shall inform its customer of the contents after and including section III of these Terms.

II. SALES

1. Prices; Payment: All prices stated are current, subject to change without notice by Seller. Buyer agrees to pay the price in effect at time of shipment. Payments for Products received are due net 30 days unless otherwise stated in the invoice. Buyer shall have no right to set off any amounts against the amount owing in respect of this invoice.
2. Discounts: Cash discounts, if any, will apply only on the net amount of invoices sent to Buyer after deducting transportation charges, taxes and duties, and will be allowed only if (a) the invoice is paid according to Seller's payment terms and (b) Buyer has no past due amounts owing to Seller.
3. Interest: Seller, at its option, may charge Buyer 1.5% interest per month or the maximum legal rate, whichever is less, on any balance not paid within the stated terms.
4. Orders: Seller will accept no order less than 200 U.S. dollars net billing.
5. Currencies: If the prices quoted herein are in a currency other than U.S. dollars, Buyer shall make remittance to Seller at the then current exchange rate most favorable to Seller; provided that if remittance is not made when due, Buyer will convert the amount to U.S. dollars at the then current exchange rate most favorable to Seller available during the period between the due date and the date remittance is actually made.
6. Governmental Approvals: Buyer shall be responsible for all costs involved in obtaining any government approvals regarding the importation or sale of the Products.
7. Taxes: All taxes, duties and other governmental charges (other than general real property and income taxes), including any interest or penalties thereon, imposed directly or indirectly on Seller or required to be collected directly or indirectly by Seller for the manufacture, production, sale, delivery, importation, consumption or use of the Products sold hereunder (including customs duties and sales, excise, use, turnover and license taxes) shall be charged to and remitted by Buyer to Seller.
8. Financial: If the financial position of Buyer at any time becomes unsatisfactory to Seller, Seller reserves the right to stop shipments or require satisfactory security or payment in advance. If Buyer fails to make payment or otherwise comply with these Terms or any related agreement, Seller may (without liability and in addition to other remedies) cancel any unshipped portion of Products sold hereunder and stop any Products in transit until Buyer pays all amounts, including amounts payable hereunder, whether or not then due, which are owing to it by Buyer. Buyer shall in any event remain liable for all unpaid accounts.
9. Cancellation; Etc: Orders are not subject to rescheduling or cancellation unless Buyer indemnifies Seller fully against all costs or expenses arising in connection therewith.
10. Force Majeure: Seller shall not be liable for any delay or failure in delivery resulting from causes beyond its control, including earthquakes, fires, floods, strikes or other labor disputes, shortage of labor or materials, accidents to machinery, acts of sabotage, riots, delay in or lack of transportation or the requirements of any government authority.
11. Shipping; Delivery: Unless otherwise expressly agreed in writing by Seller:
    (a) All sales and shipments of Products shall be FOB shipping point (unless otherwise stated in writing by Seller), at which point title to and all risk of loss of the Products shall pass from Seller to Buyer, provided that Seller shall retain a security interest in the Products until the full purchase price is paid by Buyer;
    (b) Delivery and shipping dates are estimates only; and
    (c) Seller will package Products as it deems proper for protection against normal handling and extra charges apply to special conditions.
12. Claims: Any claim by Buyer against Seller for shortage or damage to the Products occurring before delivery to the carrier must be presented in detail in writing to Seller within 30 days of receipt of shipment.

III. PRECAUTIONS

1. Suitability: IT IS THE BUYER'S SOLE RESPOINSIBILITY TO ENSURE THAT ANY OMRON PRODUCT IS FIT AND SUFFICIENT FOR USE IN A MOTORIZED VEHICLE APPLICATION. BUYER SHALL BE SOLELY RESPONSIBLE FOR DETERMINING APPROPRIATENESS OF THE PARTICULAR PRODUCT WITH RESPECT TO THE BUYER'S APPLICATION INCLUDING (A) ELECTRICAL OR ELECTRONIC COMPONENTS, (B) CIRCUITS, (C) SYSTEM ASSEMBLIES, (D) END PRODUCT, (E) SYSTEM, (F) MATERIALS OR SUBSTANCES OR (G) OPERATING ENVIRONMENT. Buyer acknowledges that it alone has determined that the Products will meet their requirements of the intended use in all cases. Buyer must know and observe all prohibitions of use applicable to the Product/s.
2. Use with Attention: The followings are some examples of applications for which particular attention must be given. This is not intended to be an exhaustive list of all possible use of any Product, nor to imply that any use listed may be suitable for any Product:
   (a) Outdoor use, use involving potential chemical contamination or electrical interference.
   (b) Use in consumer Products or any use in significant quantities.
   (c) Energy control systems, combustion systems, railroad systems, aviation systems, medical equipment, amusement machines, vehicles, safety equipment, and installations subject to separate industry or government regulations.
   (d) Systems, machines, and equipment that could present a risk to life or property.
3. Prohibited Use: NEVER USE THE PRODUCT FOR AN APPLICATION INVOLVING SERIOUS RISK TO LIFE OR PROPERTY WITHOUT ENSURING THAT THE SYSTEM AS A WHOLE HAS BEEN DESIGNED TO ADDRESS THE RISKS, AND THAT THE PRODUCT IS PROPERLY RATED AND INSTALLED FOR THE INTENDED USE WITHIN THE OVERALL EQUIPMENT OR SYSTEM.
4. Motorized Vehicle Application: USE OF ANY PRODUCT/S FOR A MOTORIZED VEHICLE APPLICATION MUST BE EXPRESSLY STATED IN THE SPECIFICATION BY SELLER.
5. Programmable Products: Seller shall not be responsible for the Buyer's programming of a programmable Product.

IV. WARRANTY AND LIMITATION

1. Warranty: Seller's exclusive warranty is that the Products will be free from defects in materials and workmanship for a period of twelve months from the date of sale by Seller (or such other period expressed in writing by Seller). SELLER MAKES NO WARRANTY OR REPRESENTATION, EXPRESS OR IMPLIED, ABOUT ALL OTHER WARRANTIES, NON-INFRINGEMENT, MERCHANTABILITY OR FITNESS FOR A PARTICULAR PURPOSE OF THE PRODUCTS.
2. Buyer Remedy: Seller's sole obligation hereunder shall be to replace (in the form originally shipped with Buyer responsible for labor charges for removal or replacement thereof) the non-complying Product or, at Seller's election, to repay or credit Buyer an amount equal to the purchase price of the Product; provided that there shall be no liability for Seller or its affiliates unless Seller's analysis confirms that the Products were handled, stored, installed and maintained and not subject to contamination, abuse, misuse or inappropriate modification. Return of any Products by Buyer must be approved in writing by Seller before shipment.
3. Limitation on Liability: SELLER AND ITS AFFILIATES SHALL NOT BE LIABLE FOR SPECIAL, INDIRECT, INCIDENTAL OR CONSEQUENTIAL DAMAGES, LOSS OF PROFITS OR PRODUCTION OR COMMERCIAL LOSS IN ANY WAY CONNECTED WITH THE PRODUCTS, WHETHER SUCH CLAIM IS BASED IN CONTRACT, WARRANTY, NEGLIGENCE OR STRICT LIABILITY. FURTHER, IN NO EVENT SHALL LIABILITY OF SELLER OR ITS AFFILITATES EXCEED THE INDIVIDUAL PRICE OF THE PRODUCT ON WHICH LIABILITY IS ASSERTED.
4. Indemnities: Buyer shall indemnify and hold harmless Seller, its affiliates and its employees from and against all liabilities, losses, claims, costs and expenses (including attorney's fees and expenses) related to any claim, investigation, litigation or proceeding (whether or not Seller is a party) which arises or is alleged to arise from Buyer's acts or omissions under these Terms or in any way with respect to the Products.

V. INFORMATION; ETC.

1. Intellectual Property: The intellectual property embodied in the Products is the exclusive property of Seller and its affiliates and Buyer shall not attempt to duplicate it in any way without the written permission of Seller. Buyer (at its own expense) shall indemnify and hold harmless Seller and defend or settle any action brought against Seller to the extent that it is based on a claim that any Product made to Buyer specifications infringed intellectual property rights of another party.
2. Property; Confidentiality: Notwithstanding any charges to Buyer for engineering or tooling, all engineering and tooling shall remain the exclusive property of Seller. All information and materials supplied by Seller to Buyer relating to the Products are confidential and proprietary, and Buyer shall limit distribution thereof to its trusted employees and strictly prevent disclosure to any third party.
3. Performance Data: Performance data is provided as a guide in determining suitability and does not constitute a warranty. It may represent the result of Seller's test conditions, and the users must correlate it to actual application requirements.
4. Change In Specifications: Product specifications and description may be changed at any time based on improvements or other reasons. It is Seller's practice to change part numbers when published ratings or features are changed, or when significant engineering changes are made. However, some specifications of the Product may be changed without any notice.
5. Errors And Omissions: The information on Seller's website or in other documentation has been carefully checked and is believed to be accurate; however, no responsibility is assumed for clerical, typographical or proofreading errors or omissions.
6. Export Controls: Buyer shall comply with all applicable laws, regulations and licenses regarding (a) export of the Products or information provided by Seller; (b) sale of Products to forbidden or other proscribed persons or organizations; (c)disclosure to non-citizens of regulated technology or information.

VI. MISCELLANEOUS

1. Waiver: No failure or delay by Seller in exercising any right and no course of dealing between Buyer and Seller shall operate as a waiver of rights by Seller.
2. Assignment: Buyer may not assign its rights hereunder without Seller's written consent.
3. Law: These Terms are governed by Illinois law (without regard to conflict of laws). Federal and state courts in Illinois have exclusive jurisdiction for any dispute hereunder.
4. Amendment: These Terms constitute the entire agreement between Buyer and Seller relating to the Products, and no provision may be changed or waived unless in writing signed by the parties.
5. Severability: If any provision hereof is rendered ineffective or invalid, such provision shall not invalidate any other provision.

Certain Precautions on Specifications and Use

1. Suitability for Use. Seller shall not be responsible for conformity with any standards, codes or regulations which apply to the combination of the Product in Buyer's application or use of the Product. At Buyer's request, Seller will provide applicable third party certification documents identifying ratings and limitations of use which apply to the Product. This information by itself is not sufficient for a complete determination of the suitability of the Product in combination with the end product, machine, system, or other application or use. Buyer shall be solely responsible for determining appropriateness of the particular Product with respect to Buyer's application, product or system. Buyer shall take application responsibility in all cases but the following is a non-exhaustive list of applications for which particular attention must be given:
   (i) Outdoor use, uses involving potential chemical contamination or electrical interference, or conditions or uses not described in this document.
   (ii) Energy control systems, combustion systems, railroad systems, aviation systems, medical equipment, amusement machines, vehicles, safety equipment, and installations subject to separate industry or government regulations.
   (iii) Use in consumer products or any use in significant quantities.
   (iv) Systems, machines and equipment that could present a risk to life or property. Please know and observe all prohibitions of use applicable to this product.

   NEVER USE THE PRODUCT FOR AN APPLICATION INVOLVING SERIOUS RISK TO LIFE OR PROPERTY WITHOUT ENSURING THAT THE SYSTEM AS A WHOLE HAS BEEN DESIGNED TO ADDRESS THE RISKS, AND THAT THE OMRON PRODUCT IS PROPERLY RATED AND INSTALLED FOR THE INTENDED USE WITHIN THE OVERALL EQUIPMENT OR SYSTEM.
2. Programmable Products. Seller shall not be responsible for the user's programming of a programmable product, or any consequence thereof.
3. Performance Data. Performance data given in this publication is provided as a guide for the user in determining suitability and does not constitute a warranty. It may represent the result of Seller's test conditions, and the users must correlate it to actual application requirements. Actual performance is subject to Seller's Warranty and Limitations of Liability.
4. Change in Specifications. Product specifications and accessories may be changed at any time based on improvements and other reasons. It is our practice to change part numbers when published ratings or features are changed, or when significant construction changes are made. However, some specifications of the Product may be changed without any notice. When in doubt, special part numbers may be assigned to fix or establish key specifications for your application. Please consult with your Seller representative at any time to confirm actual specifications of purchased Product.
5. Errors and Omissions. The information in this publication has been carefully checked and is believed to be accurate; however, no responsibility is assumed for clerical, typographical or proofreading errors, or omissions.
6. RoHS Compliance. Where indicated, our products currently comply, to the best of our knowledge as of the date of this publication, with the requirements of the European Union's Directive on the Restriction of certain Hazardous Substances ("RoHS"), although the requirements of RoHS do not take effect until July 2006. These requirements may be subject to change. Please consult our website for current information.

Complete "Terms and Conditions of Sale" for product purchase and use are on Omron's website at http://www.components.omron.com – under the "About Us" tab, in the Legal Matters section.

ALL DIMENSIONS SHOWN ARE IN MILLIMETERS.
To convert millimeters into inches, multiply by 0.03937. To convert grams into ounces, multiply by 0.03527.

OMRON

OMRON ELECTRONIC COMPONENTS LLC
55 E. Commerce Drive, Suite B
Schaumburg, IL 60173
847-882-2288

OMRON ON-LINE
Global - http://www.omron.com
USA - http://www.components.omron.com

Cat. No. J01C-E-01 01/07 Specifications subject to change without notice Printed in USA