REMOTE SEAL TYPE
DIFFERENTIAL PRESSURE TRANSMITTER

DATA SHEET

FKD···5

The FCX–AIII differential pressure transmitter accurately measures differential pressure, liquid level or gauge pressure and transmits a proportional 4 to 20mA signal. The transmitter utilizes a unique micromachined capacitance silicon sensor with state-of-the-art microprocessor technology to provide exceptional performance and functionality. Totally welded construction of the seals assures excellent reliability in high temperature and highly corrosive process conditions.



FEATURES

1. **High accuracy**
   0.2% accuracy for all calibrated spans is a standard feature for all DP models covering 0.32kPa {3.2mbar} range to 500kPa {5bar} high differential pressure range. 0.1% accuracy is available as option. Fuji's micro-capacitance silicon sensor assures this accuracy for all elevated or suppressed calibration ranges without additional adjustment.
2. **Minimum environmental influence**
   The "Advanced Floating Cell" design which protects the pressure sensor against changes in temperature, static pressure, and overpressure substantially reduces total measurement error in actual field applications.
3. **Fuji/HART® bilingual communications protocol**
   FCX–AIII series transmitter offers bilingual communications to speak both Fuji proprietary protocol and HART®. Any HART® compatible devices can communicate with FCX–AIII.
4. **Application flexibility**
   Various options that render the FCX–AIII suitable for almost any process applications include:
   - Full range of hazardous area approvals
   - Built-in RFI filter and lightning arrester
   - 5-digit LCD meter with engineering unit
   - Stainless steel electronics housing
   - Wide selection of materials
   - High temperature, high vacuum seals
5. **Programmable output Linearization Function**
   In addition to Linear and Square Root, output signal can be freely programmable.
   (Up to 14 compensated points at approximation.)
6. **Burnout current flexibility (Under Scale: 3.2 to 4.0mA, Over Scale: 20.0 to 22.5mA)**
   Burnout signal level is adjustable using Model FXW Hand Held Communicator (HHC) to comply with NAMUR NE43.
7. **Dry calibration without reference pressure**
   Thanks to the best combination of unique construction of mechanical parts (Sensor unit) and high performance electronics circuit (Electronics unit), reliability of dry calibration without reference pressure is at equal level as wet calibration.

SPECIFICATIONS

Functional specifications

Service: Liquid, gas, or vapour

Static pressure, span, and range limit:

Type	Static pressure	Span limit [kPa] {m bar}		Range limit [kPa] {m bar}
		Min.	Max.	
FKD□□3	Up to flange rating	0.32 { 3.2 }	32 { 320 }	+/– 32 {+/– 320}
FKD□□5		1.3 { 13 }	130 { 1300 }	+/– 130 {+/– 1300}
FKD□□6		5 { 50 }	500 { 5000}	+/– 500 {+/– 5000}

Remark : To minimize environmental influence, span should be greater than 1/40 of the max. span in most applications.

– Lower limit of static pressure (vacuum limit),
  Silicone fill sensor: See Fig. 1
  Fluorinated fill sensor: Atmospheric pressure
– The maximum span of each sensor can be converted to different units using factors as below.
  1MPa =10^3kPa=10bar=10.19716kgf/cm^2
  =145.0377psi
  1kPa=10mbar=101.976mmH_2O=4.01463H_2O

Overrange limit: To maximum static pressure limit

Output signal: 4 to 20mA DC (linear or square root) with digital signal superimposed on the 4 to 20mA signal

Power supply: Transmitter operates on 10.5V to 45V DC at transmitter terminals.
10.5V to 32V DC for the units with optional arrester.

Load limitations: see figure below

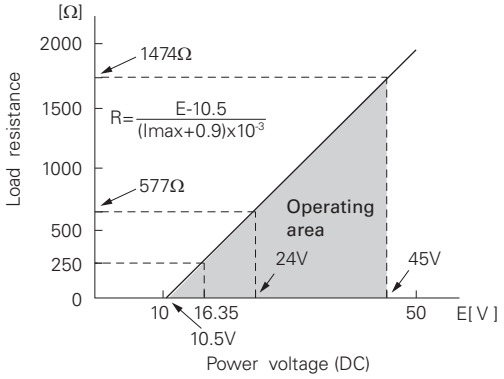

Note: For communication with HHC(1) (Model: FXW), min. of 250Ω is required.

Hazardous locations: TABLE 2

Zero/span adjustment:
Zero and span are adjustable from the HHC(1). Zero and span are also adjustable externally from the adjustment screw.

Damping: Adjustable from HHC or local configurator unit with LCD display.
The time constant is adjustable between 0.06 to 32 seconds.

Zero elevation/suppression:
−100% to +100% of URL

Normal/reverse action:
Selectable from HHC(1)

Indication: Analog indicator or 5-digit LCD meter, as specified.

Burnout direction: Selectable from HHC(1)
If self-diagnostic detect transmitter failure, the analog signal will be driven to either "Output Hold", "Output Overscale" or "Output Underscale" modes.

"Output Hold": Output signal is hold as the value just before failure happens.

"Output Overscale": Adjustable within the range 20.0mA to 22.5mA from HHC(1)

"Output Underscale": Adjustable within the range 3.2mA to 4.0mA from HHC(1)

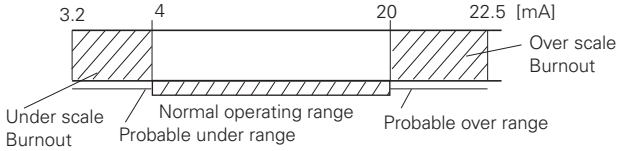

Output limits conforming to NAMUR NE43 by order.

Loop-check output:
Transmitter can be configured to provide constant signal 3.2mA through 22.5mA by HHC(1).

Temperature limit:
Ambient: −40 to + 85°C
(−20 to + 80°C for LCD indicator)
(−40 to + 60°C for arrester option)
(−10 to + 60°C for fluorinated oil fill transmitter)
(−10 to + 85°C for silicone oil "H", "S", "K") *)
(+ 20 to + 85°C for silicone oil "J", "T") *)
*) In case of capillary length is more than 7m, max temperature is +55°C.
For explosionproof units (flameproof or intrinsic safety), ambient temperature must be within the limits specified in each standard.

Process:

Fill fluid	Code in the 13th digit of "Code symbols"	Process temperature	Lower limit of static press.
Fluorinated oil	W, A and D	−20 to 120°C	Atmospheric pressure
Silicone oil	H	−15 to 250°C	
	J	20 to 300°C	
	Y and G	−40 to 180°C	2.7kPa abs {20mmHg abs}
	S	−15 to 250°C	
	T	20 to 300°C	
	K	−15 to 200°C	0.13kPa abs {1mmHg abs} or more

Storage: −40 to +90°C

Humidity limit: 0 to 100% RH

Communication: With HHC(1) (Model FXW, consult Data Sheet No. EDS8-47), following items can be remotely displayed or configured.
Note: HHC's version must be higher than 7.0 (or FXW □□□□1−□4), for FCX−AⅢ.

Local configurator with LCD display (option):
Local configurator with 3 push button and LCD display can support following items.

Items		By communication with FXW		By local configurator (with 3 push button)	
		Display	Set	Display	Set
Tag No.		v	v	v	v
Model No.		v	v	v	v
Serial No. & Software Version		v	—	v	—
Engineering unit		v	v	v	v
Range limit		v	—	v	—
Measuring range		v	v	v	v
Damping		v	v	v	v
Output mode	Linear	v	v	v	v
	Square root	v	v	v	v
Burnout direction		v	v	v	v
Calibration		v	v	v	v
Output adjust		—	v	—	v
Data		v	—	v	—
Self diagnoses		v	—	v	—
Printer (In case of FXW with printer option)		v	—	—	—
External switch lock		v	v	v	v
Transmitter display		v	v	v	v
Linearize		v	v	—	—
Rerange		v	v	v	v
Saturate current		v	v	v	v
Write protect		v	v	v	v
History – Calibration history – Ambient temperature history		 v v	 v —	 v v	 v —

Programmable output linearization function:
Output signal can be characterized with "14 points linear approximation function" from HHC(1).

EMC Conformity: EN61326-1: 2006 CE

(Note) (1) HHC: Hand Held Communicator

Performance specifications

Reference conditions, silicone oil fill, 316SS isolating diaphragms, 4 to 20mA analog output in linear mode.

Accuracy rating: (including linearity, hysteresis, and repeatability)

(Standard)

For spans greater than 1/10 of URL: 0.2% of span

For spans below 1/10 of URL:

$$\pm \left(0.1+0.1 \frac{0.1 \times \text{URL}}{\text{Span}} \right) \% \text{ of span}$$

(Option) (Code; 21th digit H,K)

For spans greater than 1/10 of URL: 0.1% of span

For spans below 1/10 of URL:

$$\pm \left(0.05+0.05 \frac{0.1 \times \text{URL}}{\text{Span}} \right) \% \text{ of span}$$

Stability: ±0.2% of upper range limit (URL) for 10 years.

Temperature effect (*):

Effects per 28°C change between the limits of –40°C and +85°C

(Standard) Zero shift: ±0.35% of URL

Total effect: ±0.5% of URL

(Option) (Code; 21th digit J,K)

Zero shift: ±0.3% of URL

Total effect: ±0.4% of URL

Note: * Excluding effect by temperature difference between the seals.

Static pressure effect:

Zero shift; 0.2% of URL / 1MPa

Span shift: –0.2% of calibrated span / 1MPa

Overrange effect: Zero shift; 0.1% of URL for flange rating pressure

Supply voltage effect:

Less than 0.005% of calibrated span per 1V

Update rate: 60 msec

Step response: (without electrical damping)

Range code	Time constant (at 23°C)	Dead time
"3"	2 s	0.12 s
"5"	1.7 s	
"6"	1.7 s	

Dielectric strength:

500V AC, 50/60Hz 1 min., between circuit and earth.

Insulation resistance:

More than 100MΩ at 500V DC.

Internal resistance for external field indicator:

12Ω or less

Physical specifications

Electrical connections:

G1/2, 1/2-14 NPT, Pg13.5, or M20 × 1.5 conduit, as specified.

Process connections:

JIS, ANSI, or DIN raised face flanges.

JIS: 10K80A, 10K100A, 30K80A, or 30K100A

ANSI: 150LB 3", 150LB 4", 300LB 3", or 300LB 4"

DIN: PN40 DN80 or PN16 DN100

See OUTLINE DIAGRAM for detailed dimensions.

Diaphragm extension:

0, 50, 100, 150, or 200mm as specified.

(See model code. Extended diaphragm is available only with 316L stainless steel or Hastelloy-C diaphragm)

Process-wetted parts material:

Diaphragm: 316L stainless steel, Hastelloy-C, Monel, Tantalum, Titanium or Zirconium

Flange face: 316 stainless steel, Hastelloy-C lining

Monel lining, or Tantalum lining

Extension: 316 stainless steel or Hastelloy-C

Non-wetted parts material:

Electronics housing: Low copper die-cast aluminum alloy finished with polyester coating (standard), or 316 stainless steel (ASTM CF8M), as specified.

Capillary: In case of 11th code "D, E, F, L, M, N, P", PE armored stainless steel.

In case of 13th code "Q, R, S, T, V, W, X", stainless steel armored stainless steel.

Mounting flange: 304 stainless steel or carbon steel

Fill fluid: Silicone oil (standard) or fluorinated oil

Mounting bracket: 304 stainless steel

Environmental protection:

IEC IP67 and NEMA 6/6P

Mounting: On 60.5mm (JIS 50A) pipe using mounting bracket, direct wall mounting

Mass {weight}: Transmitter approximately 12 to 31kg without options.

Add; 0.5kg for mounting bracket

4.5kg for stainless steel housing option

1.5kg per 50mm extension of diaphragm

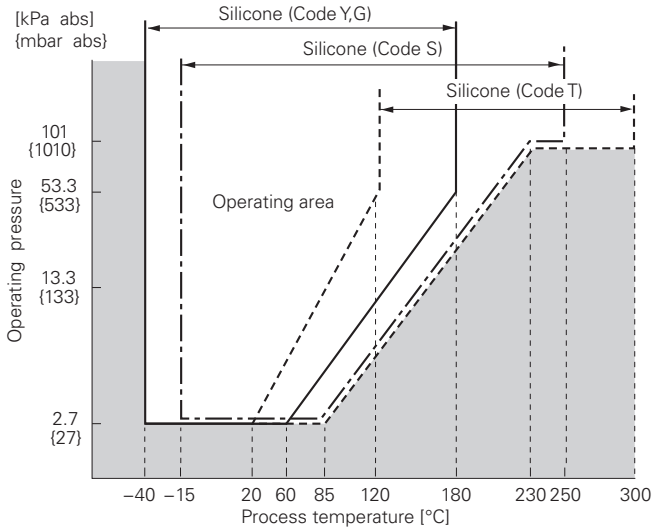

Fig. 1 Relation between process temperature and operating pressure

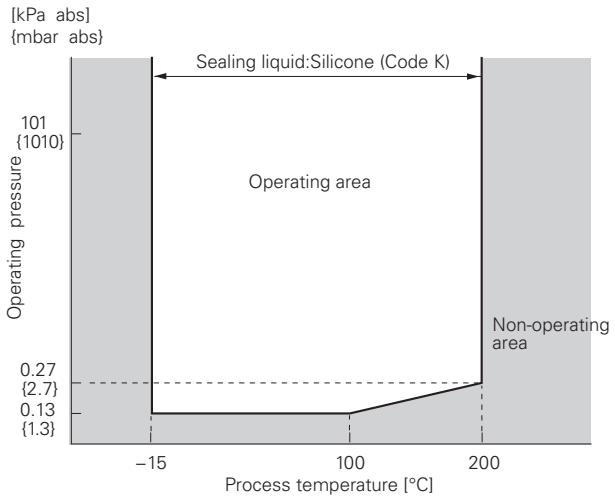

Fig. 2 Relation between process temperature and operating pressure

Optional features

Indicator: A plug-in analog indicator (2.5% accuracy). An optional 5-digit LCD meter with engineering unit is also available.

Local configurator with LCD display: An optional 5 digits LCD meter with 3 push buttons can support items as using communication with FXW.

Arrester: A built-in arrester protects the electronics from lightning surges.
Lightning surge immunity:
4kV (1.2 × 50μs)

Oxygen service: Special cleaning procedures are followed throughout the process to maintain all process wetted parts oil-free.
The fill fluid is fluorinated oil.

Chlorine service: Oil-free procedures as above. Includes fluorinated oil for fill.

Degreasing: Process-wetted parts are cleaned, but the fill fluid is standard silicone oil. Not for use on oxygen or chlorine measurement.

Vacuum service: Special silicone oil and filling procedure are applied.
See Fig. 1, Fig. 2.

Optional tag plate: An extra stainless steel tag for customer tag data is wired to the transmitter.

Coating of cell: Cell's surface is finished with epoxy/polyurethane double coating. Specify if environment is extremely corrosive.

ACCESSORIES

Hand-held communicator:
(Model FXW, refer to Data Sheet No. EDS 8-47)

CODE SYMBOLS

Digit	Description		Note	1 2 3 4 5 6 7 8 9 10 11 12 13 14 15 21 ← Digit No. of code
				F K D 5 - 0 -
4	<Connections>			
	<Conduit connection>	<Case type>		
	G1/2	T type		5
	1/2-14NPT	T type		6
	Pg 13.5	T type		7
	M20 × 1.5	T type		8
	G1/2	L type		S
	1/2-14NPT	L type		T
	Pg 13.5	L type		V
	M20 × 1.5	L type		W
5	<Flange>			
	Mounting flange	Flange size and rating		
	304 stainless steel	JIS 10K 80A		0
		JIS 10K 100A		1
		JIS 30K 80A		2
		JIS 30K 100A		3
		ANSI/JPI 150LB 3"		4
		ANSI/JPI 150LB 4"		5
		ANSI/JPI 300LB 3"		6
		ANSI/JPI 300LB 4"		7
		DIN PN16/40 DN80		8
		DIN PN16 DN100		9
		JIS 20K 80A		M
		ANSI/JPI 600LB 3B		R
	Carbon steel	JIS 10K 80A		A
		JIS 10K 100A		B
		JIS 30K 80A		C
		JIS 30K 100A		D
		ANSI/JPI 150LB 3"		E
		ANSI/JPI 150LB 4"		F
		ANSI/JPI 300LB 3"		G
		ANSI/JPI 300LB 4"		H
		DIN PN16/40 DN80		J
		DIN PN16 DN100		K
	316 stainless steel	JIS 10K 80A		S
		ANSI/JPI 150LB 3B		T
		ANSI/JPI 150LB 4B		U
		ANSI/JPI 300LB 3B		V
		ANSI/JPI 300LB 4B		W
		ANSI/JPI 600LB 3B		X
	None (wafer type)	3 inch wafer		P
		4 inch wafer		Q
6	<Span limit (*1) [kPa]{m bar}>		Note 1	
	0.32.... 32 {3.2..... 320}			3
	1.3..... 130 {13..... 1300}			5
	5..... 500 {50..... 5000}			6
7	<Material/diaphragm extension>			
	Diaphragm	Flange face	Diaph. extension [mm]	
	316L stainless steel	316 stainless steel	0	V
			50 (*2)	A
			100 (*2)	B
			150 (*2)	C
			200 (*2)	D
	Hastelloy-C	Hastelloy-C	0	H
	316L stainless +Au coating	316 stainless steel	0	J
	Hastelloy-C	316 stainless steel	0	W
	Monel	Monel	0	M
	Tantalum	Tantalum	0	T
	Titanium	Titanium	0 (*3)	P
	Zirconium	Zirconium	0 (*3)	R
				Note 2 / Note 3
8				5

Note 1: (*1) 100: 1 turn down is possible, but should be used at a span greater than 1/40 of the maximum span for better performance.

Note 2: (*2) Available for 5th digit code "1", "3", "5", "7", "B", "D", "F", "H", "K", "Q", "U", "W", when 13th digit code "S", "T", "K".

Note 3: (*3) Available for 6th code "5", "6" and 5th code "0", "2", "4", "6", "8", "A", "C", "E", "G", "J", "P", "M", "R", "S", "T", "W".

Digit	Description		Note	1 2 3 4 5 6 7 8	9 10 11 12 13	14 15	21 ← Digit No. of code
				F K D		0	
9	<Indicator and arrester>						
	Indicator	Arrester					
	None	None			A		
	Analog, 0 to 100% linear scale	None			B		
	Analog, 0 to 100% sq. root scale (*7)	None	Note 7		C		
	Analog, custom scale	None			D		
	Analog, double scale (linear and sq. root)	None			J		
	None	Yes			E		
	Analog, 0 to 100% linear scale	Yes			F		
	Analog, 0 to 100% sq. root scale (*7)	Yes	Note 7		G		
	Analog, custom scale	Yes			H		
	Analog, double scale (linear and sq. root)	Yes			K		
	Digital, 0 to 100% linear scale	None			L		
	Digital, custom scale	None			P		
	Digital, 0 to 100% square root scale	None			M		
	Digital, 0 to 100% linear scale	Yes			Q		
	Digital, custom scale	Yes			S		
	Digital, 0 to 100% square root scale	Yes			N		
	Digital, 0 to 100% linear scale (Local configurator unit with LCD display)	None			1		
	Digital, custom scale (Local configurator unit with LCD display)	None			2		
	Digital, 0 to 100% square root scale (Local configurator unit with LCD display)	None			3		
	Digital, 0 to 100% linear scale (Local configurator unit with LCD display)	Yes			4		
	Digital, custom scale (Local configurator unit with LCD display)	Yes			5		
	Digital, 0 to 100% square root scale (Local configurator unit with LCD display)	Yes			6		
10	<Approvals for hazardous locations>						
	None (for ordinary locations)				A		
	TIIS, Flameproof (Cable gland seal) (*11)		Note 11		C		
	TIIS, Intrinsic safety				G		
	FM, Flameproof (or explosionproof) (*14)		Note 14		D		
	FM, Intrinsic safety and nonincentive				H		
	FM Combined of flameproof and intrinsic safety (*14)		Note 14		V		
	ATEX Flameproof (*13)		Note 13		X		
	ATEX Intrinsic safety				K		
	ATEX Type n				P		
	ATEX Combined of flameproof and intrinsic safety (*13)		Note 13		M		
	IECEx Scheme, Flameproof (*13)		Note 13		R		
	IECEx Scheme, Intrinsic safety				T		
	CSA, Flameproof (or explosionproof) (*14)		Note 14		E		
	CSA, Intrinsic safety and nonincentive				J		
	NEPSI, Flameproof (or exprosionproof)				F		
	NEPSI, Intrinsic safety				S		
	NEPSI, Combined of flameproof and intrinsic safety				U		
11	<Capillary and mounting bracket>						
	Capillary	Mounting bracket	armor of capilary				
	1.5 m	304 Stainless steel	PE	(*4)	Note 4	D	
	3	304 Stainless steel	PE	(*4)	Note 4	E	
	5	304 Stainless steel	PE	(*4)	Note 4	L	
	6	304 Stainless steel	PE	(*4)	Note 4	F	
	7	304 Stainless steel	PE	(*4)	Note 4	M	
	8	304 Stainless steel	PE	(*4)	Note 4	N	
	10	304 Stainless steel	PE	(*4)	Note 4	P	
	1.5	304 Stainless steel	Stainless steel	(*5)	Note 5	Q	
	3	304 Stainless steel	Stainless steel	(*5)	Note 5	R	
	5	304 Stainless steel	Stainless steel	(*5)	Note 5	S	
	6	304 Stainless steel	Stainless steel	(*5)	Note 5	T	
	7	304 Stainless steel	Stainless steel	(*5)	Note 5	V	
	8	304 Stainless steel	Stainless steel	(*5)	Note 5	W	
	10	304 Stainless steel	Stainless steel	(*5)	Note 5	X	
12	<Options>						
	Extra SS tag plate	Stainless steel elec. housing	Coating of cell				
	None (*6)	None	None		Note 6	Y	
	Yes (*6)	None	None			B	
	None (*6)	None	Yes			M	
	Yes (*6)	None	Yes			N	
	None	Yes (*8)	Yes		Note 8	P	
	Yes	Yes (*8)	Yes		Note 8	Q	

Note 4: (*4) Available for 13th digit code "Y, W, G, A, D".
Inquire about in case of 13th other code.
Note 5: (*5) Available for all 13th digit code.
Note 6: (*6) Customer tag number can be engraved on standard stainless steel name plate. If extra tag plate is required, select "Yes".
Note 7: (*7) In case of squre root output mode, squre root scale is not available.
Note 8: (*8) Not available for 10th digit code "C".

Digit	Description			Note	1 2 3 4 5 6 7 8 9 10 11 12 13 14 15 21 ← Digit No. of code F K D 5 - 0 -
13	<Special applications and fill fluid>				
	Treatment	Fill fluid			
	Standard	Silicone oil			Y
	Standard	Fluorinated oil			W
	Degreasing	Silicone oil			G
	Oxygen service	Fluorinated oil (7th digit code "V", "W", "A", "B", "C" and "D")			A
	Chlorine service	Fluorinated oil (7th digit code "H", "T")			D
	High temp. 250°C	Silicone oil	7th digit code "V", "W", "A", "B", "C", "D", "H", "F", "G", "K", and "L" (*9)	Note 9	H
	High temp. 300°C	Silicone oil			J
	High temp. and vacuum (250°C)	Silicone oil	7th digit code "V", "W", "A", "B", "C", and "D"		S
	High temp. and vacuum (300°C)	Silicone oil			T
	High temp. and high vacuum	Silicone oil			K
14	<Teflon membrane>				
	None				Y
	Yes (Available for 5th digit code "0", "2", "4", "6", "8", "A", "C", "E", "G", "J", "P", "M", "R", "S", "T", "V", "X" and 7th digit code "V", "W", "J". Not available for the 13th digit code "H", "J".)				C
21	<Other options> (*10)			Note 10	
	High accuracy type	Instruction manual attached			H
	Low temperature effect type	Instruction manual attached			J
	H+J	Instruction manual attached			K
	Instruction manual unattached				L
	High accuracy type	Instruction manual unattached			T
	Low temperature effect type	Instruction manual unattached			U
	T+U	Instruction manual unattached			V

Note 9: (*9) Treatment; Standard
Note 10: (*10) If other option is not necessary, 21st digit code is blank.
In case of 21st digit code is blank, instruction manual attached.
Note 11: (*11) Available for 4th digit code "S".
Note 13: (*13) Available for 4th digit code "6", "8", "T", "W".
Note 14: (*14) Available for 4th digit code "6", "T".

ORDERING INFORMATION

When ordering this instrument, specify:

1. CODE SYMBOLS
2. Measuring range
3. Output orientation (burnout direction) when abnormality is occurred in the transmitter.
   Hold / Overscale / Underscale
   Unless otherwise specified, output hold function is supplied.
4. Output mode (linear or square root output)
   Unless otherwise specified, output mode is linear.
5. Indication method (indicated value and unit) in case of the actual scale (code D, H, P, S ,2 ,5 on 9th digit).
6. Tag No. (up to 14 alphanumerical characters), if required.

OUTLINE DIAGRAM (Unit:mm)

<AMP. case: L type>

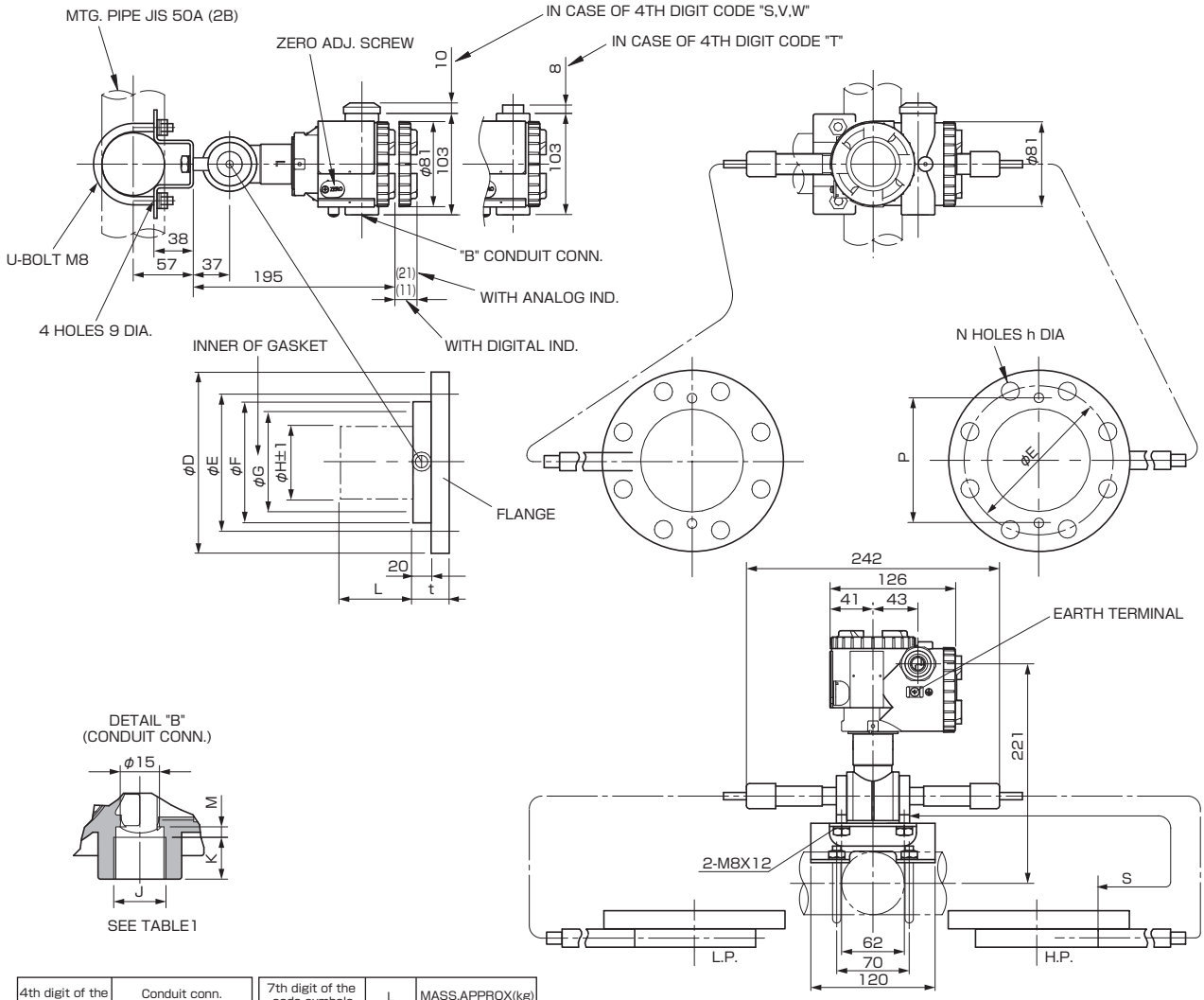

4th digit of the code symbols	Conduit conn.		
	J	K	M
S	G 1/2	18	2
T	1/2-14NPT	16	4
V	Pg13.5	10.5	4.5
W	M20×1.5	16	4

TABLE 1

7th digit of the code symbols	L	MASS.APPROX(kg)
V, W, J, H, M, T, P, R	0	12.7~18.2
A	50	13.7~29.2
B	100	14.2~29.7
C	150	14.7~30.2
D	200	15.2~30.7

5th digit of the code symbols	φD	φE	φF		φG	φH±1	t	P	N-φh	FLANGE
			Standard materials specification Note 1	Corrosion-resistant materials specification Note 2						
0, A, S	185	150	126	134	100	73	38	116	8-19	JIS-10K-80A
M	200	160	126	134	100	73	42	116	8-23	JIS-20K-80A
2, C	210	170	126	134	100	73	48	116	8-23	JIS-30K-80A
1, B	210	175	151	158	103	96	38	141	8-19	JIS-10K-100A
3, D	240	195	151	158	103	96	52	141	8-25	JIS-30K-100A
4, E, T	191	152.5	126	134	100	73	44	116	4-20	ANSI 150LB 3B
6, G, V	210	168	126	134	100	73	49	116	8-23	ANSI 300LB 3B
R, X	210	168	126	134	100	73	52	116	8-23	ANSI 600LB 3B
5, F, U	229	190.5	151	158	103	96	44	141	8-20	ANSI 150LB 4B
7, H, W	254	200	151	158	103	96	52	141	8-23	ANSI 300LB 4B
8, J	200	160	126	134	100	73	44	116	8-18	DIN PN40 DN80
9, K	220	180	151	158	103	96	40	141	8-18	DIN PN16 DN100

Note1) In case of the 7th digit of type code is V, A, B, C, D, J or W.
Note2) In case of the 7th digit of type code is H, M, T, P or R.

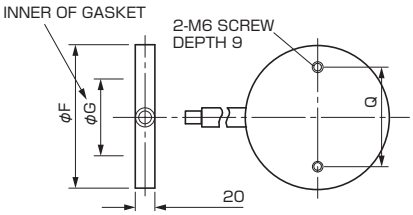

11th digit of the code symbols	S(m)
D, Q	1.5
E, R	3
L, S	5
F, T	6
M, V	7
N, W	8
P, X	10

<WAFER TYPE>

	Q
80A, 3B	116
100A, 4B	141

CONNECTION DIAGRAM

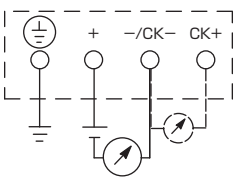

<SS TAG PLATE>

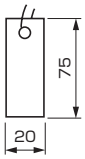

OPTION PARTS FOR FLAMEPROOF OF TIIS (JAPAN)

10th digit code C (Cable gland type)
NOTE1)

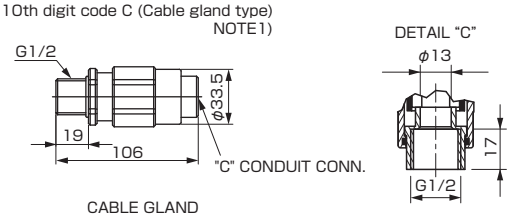

NOTE1) IN CASE OF 10TH CODE "C", φ11 CABLE IS SUITBLE.

<AMP. case: T type>

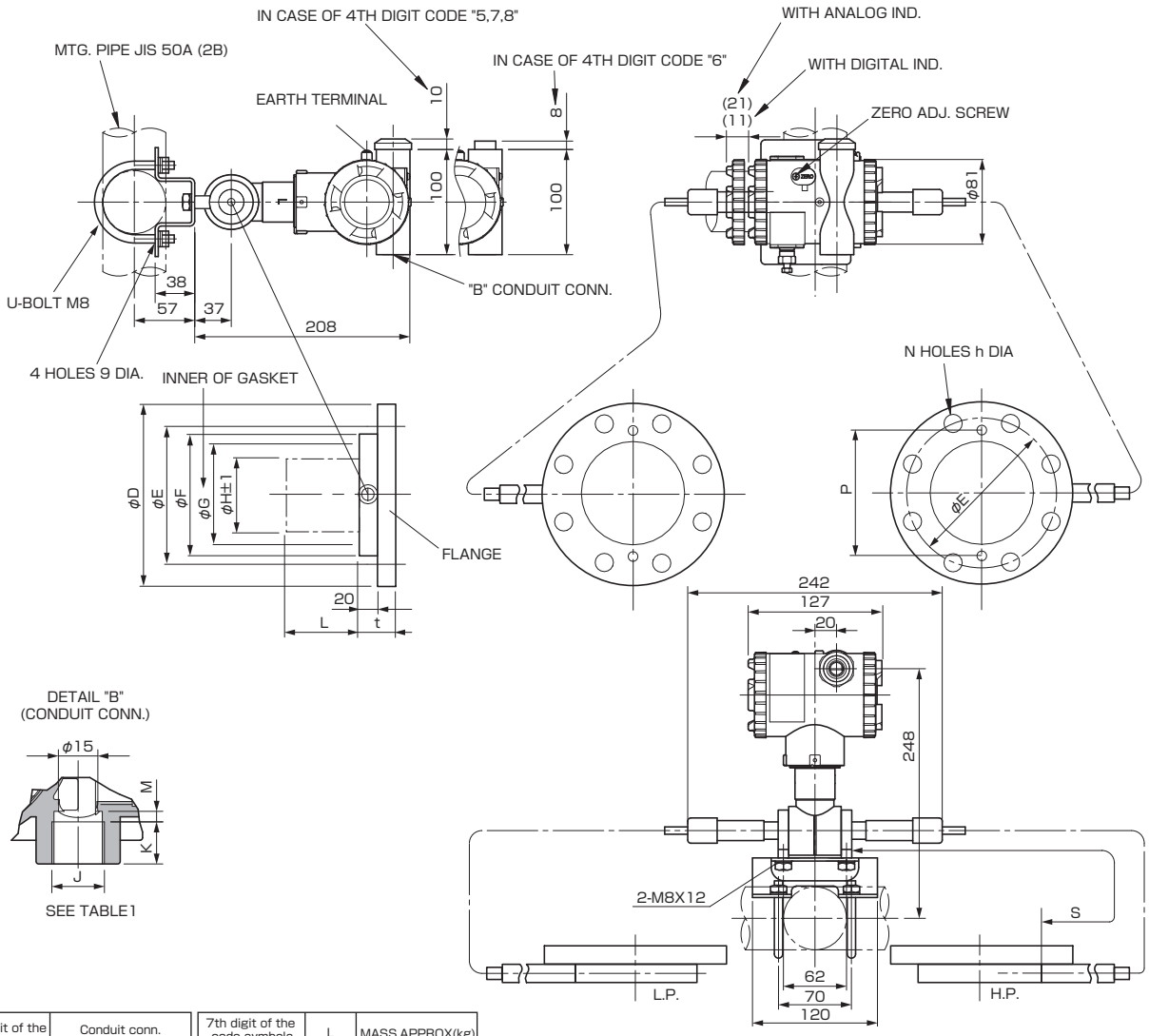

4th digit of the code symbols	Conduit conn.		
	J	K	M
5	G 1/2	18	2
6	1/2-14NPT	16	4
7	Pg13.5	10.5	4.5
8	M20×1.5	16	4

7th digit of the code symbols	L	MASS.APPROX(kg)
V, W, J, H, M, T, P, R	0	12.7~18.2
A	50	13.7~29.2
B	100	14.2~29.7
C	150	14.7~30.2
D	200	15.2~30.7

TABLE 1

5th digit of the code symbols	φD	φE	φF Standard materials specification Note 1	φF Corrosion-resistant materials specification Note 2	φG	φH±1	t	P	N-φh	FLANGE
0, A, S	185	150	126	134	100	73	38	116	8-19	JIS-10K-80A
M	200	160	126	134	100	73	42	116	8-23	JIS-20K-80A
2, C	210	170	126	134	100	73	48	116	8-23	JIS-30K-80A
1, B	210	175	151	158	103	96	38	141	8-19	JIS-10K-100A
3, D	240	195	151	158	103	96	52	141	8-25	JIS-30K-100A
4, E, T	191	152.5	126	134	100	73	44	116	4-20	ANSI 150LB 3B
6, G, V	210	168	126	134	100	73	49	116	8-23	ANSI 300LB 3B
R, X	210	168	126	134	100	73	52	116	8-23	ANSI 600LB 3B
5, F, U	229	190.5	151	158	103	96	44	141	8-20	ANSI 150LB 4B
7, H, W	254	200	151	158	103	96	52	141	8-23	ANSI 300LB 4B
8, J	200	160	126	134	100	73	44	116	8-18	DIN PN40 DN80
9, K	220	180	151	158	103	96	40	141	8-18	DIN PN16 DN100

Note1) In case of the 7th digit of type code is V, A, B, C, D, J or W.
Note2) In case of the 7th digit of type code is H, M, T, P or R.

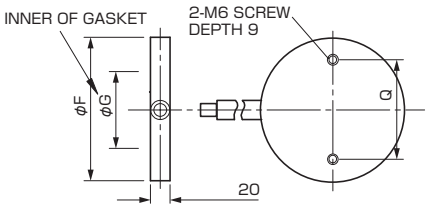

11th digit of the code symbols	S(m)
D, Q	1.5
E, R	3
L, S	5
F, T	6
M, V	7
N, W	8
P, X	10

<WAFER TYPE>

	Q
80A, 3B	116
100A, 4B	141

CONNECTION DIAGRAM

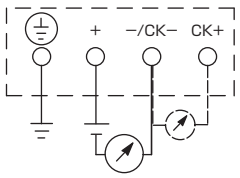

<SS TAG PLATE>

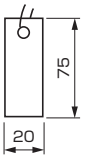

TABLE 2

<table>
<tr><th>Authorities</th><th>Intrinsic safety</th></tr>
<tr><td>ATEX</td><td>Ex II 1 G
Ex ia IIC T5 Tamb = –40°C to +50°C
Ex ia IIC T4 Tamb = –40°C to +70°C

Entity Parameters:
Ui=28V, Ii=94.3mA, Pi=0.66W,
Ci=26nF (Without Arrester), Li=0.6mH (Without analog indicator),
Ci=36nF (With Arrester), Li=0.7mH (With analog indicator)</td></tr>
<tr><td>Factory Mutual</td><td>Class I II III
Div.1 Groups A, B, C, D, E, F, G
T4 Entity Type 4X
<table>
<tr><th colspan="2">Model code</th><th rowspan="2">Tamb</th></tr>
<tr><th>9th digit</th><th>13th digit</th></tr>
<tr><td>A,B,C,D,J</td><td>Y,G,H,J,S,T,K</td><td>–40°C to +85°C</td></tr>
<tr><td>L,P,M,1,2,3</td><td>Y,G,H,J,S,T,K</td><td>–20°C to +80°C</td></tr>
<tr><td>Q,S,N,4,5,6</td><td>Y,G,H,J,S,T,K</td><td>–20°C to +60°C</td></tr>
<tr><td>E,F,G,H,K</td><td>Y,G,H,J,S,T,K</td><td>–40°C to +60°C</td></tr>
<tr><td>–</td><td>W,A,D</td><td>–10°C to +60°C</td></tr>
</table>
Entity Parameters:
Vmax=28V, Imax=94.3mA, Pi=0.66W,
Ci=35.98nF, Li=0.694mH</td></tr>
<tr><td>CSA</td><td>Class I
Div.1 Groups A, B, C, D
Class II
Div.1 Groups E, F, G
Class III
Div.1
Temp Code T5 Tamb max = +50°C
Temp Code T4 Tamb max = +70°C
Entity Parameters:
Vmax=28V, Imax=94.3mA, Ci=25nF (Without Arrester),
Ci=36nF (With Arrester),Li=0.6mH (Without analog meter),
Li=0.7mH (With analog meter)</td></tr>
<tr><td>TIIS</td><td>Ex ia IIC T4
Tamb max = +60°C
Entity Parameters:
Ui=28V, Ii=94.3mA, Pi=0.66W,
Ci=38.4nF, Li=0.694mH</td></tr>
<tr><td>IECEx Scheme</td><td>Ex ia IIC T4
Tamb = –40°C to +70°C
Ex ia IIC T5
Tamb = –40°C to +50°C
Entity Parameters:
Ui=28V, Ii=94.3mA, Pi=0.66W,
Ci=26nF (Without Arrester), Li=0.6mH (Without analog indicator),
Ci=36nF (With Arrester), Li=0.7mH (With analog indicator)</td></tr>
<tr><td>NEPSI</td><td>Ex ia IIC T4
Ex d IIB+H_2 T6 / Ex ia IIC T4
<table>
<tr><th colspan="2">Model code</th><th rowspan="2">Tamb</th></tr>
<tr><th>9th digit</th><th>13th digit</th></tr>
<tr><td>A,B,C,D,J</td><td>Y,G,H,J,S,T,K</td><td>–40°C to +85°C</td></tr>
<tr><td>L,P,M,1,2,3</td><td>Y,G,H,J,S,T,K</td><td>–20°C to +80°C</td></tr>
<tr><td>Q,S,N,4,5,6</td><td>Y,G,H,J,S,T,K</td><td>–20°C to +60°C</td></tr>
<tr><td>E,F,G,H,K</td><td>Y,G,H,J,S,T,K</td><td>–40°C to +60°C</td></tr>
<tr><td>–</td><td>W,A,D</td><td>–10°C to +60°C</td></tr>
</table>
Entity Parameters:
Ui=42.4V, Ii=113mA, Pi=1W,
Ci=35.98nF, Li=0.694mH</td></tr>
</table>

<table>
<tr><th>Authorities</th><th>Flameproof</th></tr>
<tr><td>ATEX</td><td>Ex II 2 GD
Ex d IIC T6 IP66/67 T85°C
Tamb = –40°C to +65°C
Ex d IIC T5 IP66/67 T100°C
Tamb = –40°C to +85°C</td></tr>
<tr><td>Factory Mutual</td><td>Class I
Div.1 Groups B, C, D
T6 Type 4X
Class II III
Div.1 Groups E, F, G
T6 Type 4X
Tamb max = +60°C</td></tr>
<tr><td>CSA</td><td>Class I
Div.1 Groups C, D
Class II
Div.1 Groups E, F, G
Class III
Div.1

Note) “Seal Not Required” enclosure is allowed.</td></tr>
<tr><td>TIIS</td><td>Ex do IIB+H_2 T4
Tamb max = +60°C
Maximum process temp. = +120°C</td></tr>
<tr><td>IECEx Scheme</td><td>Ex d IIC T5 IP66/67
Tamb = –40°C to +85°C
Ex d IIC T6 IP66/67
Tamb = –40°C to +65°C</td></tr>
<tr><td>NEPSI</td><td>Ex d IIB+H_2 T6
Tamb = –40°C to +60°C</td></tr>
</table>

<table>
<tr><th>Authorities</th><th>Type n
Nonincendive</th></tr>
<tr><td>ATEX</td><td>Ex II 3 GD
EEx nL IIC T5 Tamb = –40°C to +50°C
EEx nL IIC T4 Tamb = –40°C to +70°C
Specific Parameters:
Model without arrester:
Ui=42.4V, Ii=113mA, Pi=1W,
Ci=25.18nF, Li=0.694mH
Model with arrester:
Ui=32V, Ii=113mA, Pi=1W,
Ci=35.98nF, Li=0.694mH

EEx nAL IIC T5 Tamb = –40°C to +50°C
EEx nAL IIC T4 Tamb = –40°C to +70°C
Specific Parameters:
Model without arrester:
Umax=42.4V, Imax=113mA, Pmax=1W
Model with arrester:
Umax=32V, Imax=113mA, Pmax=1W</td></tr>
<tr><td>Factory Mutual (pending)</td><td>Class I II III
Div.2 Groups A, B, C, D, F, G
T4 Entity Type 4X
<table>
<tr><th colspan="2">Model code</th><th rowspan="2">Tamb</th></tr>
<tr><th>9th digit</th><th>13th digit</th></tr>
<tr><td>A,B,C,D,J</td><td>Y,G,H,J,S,T,K</td><td>–40°C to +85°C</td></tr>
<tr><td>L,P,M,1,2,3</td><td>Y,G,H,J,S,T,K</td><td>–20°C to +80°C</td></tr>
<tr><td>Q,S,N,4,5,6</td><td>Y,G,H,J,S,T,K</td><td>–20°C to +60°C</td></tr>
<tr><td>E,F,G,H,K</td><td>Y,G,H,J,S,T,K</td><td>–40°C to +60°C</td></tr>
<tr><td>–</td><td>W,A,D</td><td>–10°C to +60°C</td></tr>
</table></td></tr>
<tr><td>CSA</td><td>Class I
Div.2 Groups A, B, C, D
Class II
Div.2 Groups E, F, G
Class III
Div.2
Temp Code T5 Tamb max = +50°C
Temp Code T4 Tamb max = +70°C
Entity Parameters:
Vmax=28V, Ci=25.18nF (Without Arrester),
Ci=35.98nF (With Arrester), Li=0.694mH</td></tr>
</table>

⚠ Caution on Safety

*Before using this product, be sure to read its instruction manual in advance.

Fuji Electric Co., Ltd.

International Sales Div
Sales Group
Gate City Ohsaki, East Tower, 11-2, Osaki 1-chome,
Shinagawa-ku, Tokyo 141-0032, Japan
http://www.fujielectric.com
Phone: 81-3-5435-7280, 7281 Fax: 81-3-5435-7425
http://www.fjielectric.com/products/instruments/

Information in this catalog is subject to change without notice.

Printed in Japan