SMALL FLANGE REMOTE SEAL TYPE PRESSURE TRANSMITTER

DATA SHEET

FKW···5

The FCX–AIII small flange remote seal type pressure transmitter accurately measures gauge pressure and transmits a proportional 4 to 20mA signal.
The transmitter utilizes a unique micromachined capacitance silicon sensor with state-of-the-art microprocessor technology to provide exceptional performance and functionality.
Totally welded construction of the seals assures excellent reliability in high temperature and highly corrosive process conditions.

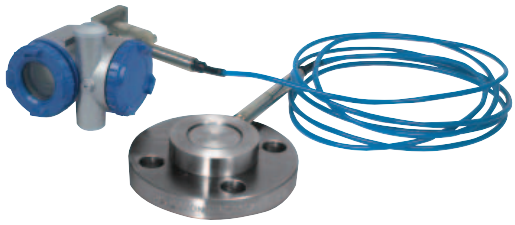

FEATURES

1. **Directly connectable to 1-1/2in and 2in flanges**
   The transmitter is connectable to 1-1/2in and 2in pipes without a reducer.
2. **Connectable to 1/2in and 3/4in pipes**
   Use of direct mounting adapter allows the transmitter to be connected to the following process.
   1/2in and 3/4in flanges
   Screw connection 1/2-14NPT, 3/4-14NPT, Rc1/2, Rc3/4
3. **Minimum environmental influence**
   The "Floating Cell" design which protects the pressure sensor against changes in temperature, and overpressure substantially reduces total measurement error in actual field applications.
4. **Fuji/HART® bilingual communications protocol**
   FCX–AIII series transmitter offers bilingual communications to speak both Fuji proprietary protocol and HART®. Any HART® compatible devices can communicate with FCX–AIII.
5. **Application flexibility**
   Various options that render the FCX–AIII suitable for almost any process applications include:
   – Full range of hazardous area approvals
   – Built-in RFI filter and lightning arrester
   – 5-digit LCD meter with engineering unit
   – Stainless steel electronics housing
   – Wide selection of materials
   – High temperature, vacuum seals
6. **Burnout current flexibility (Under Scale: 3.2 to 4.0mA, Over Scale: 20.0 to 22.5mA)**
   Burnout signal level is adjustable using Model FXW Hand Held Communicator (HHC) to comply with NAMUR NE43.
7. **Dry calibration without reference pressure**
   Thanks to the best combination of unique construction of mechanical parts (Sensor unit) and high performance electronics circuit (Electronics unit), reliability of dry calibration without reference pressure is at equal level as wet calibration.

SPECIFICATIONS

Functional specifications

Service: Liquid, gas, or vapour

Span, range, and overrange limit:

Type	Span limit [kPa]{bar}		Range limit [kPa]{bar}	Overrange limit [MPa] {bar}
	Min.	Max.		
F KW□□2	50 {0.5}	500 {5}	–100 to +500 {–1 to +5}	1.5 {15}
F KW□□3	300 {3}	3000 {30}	–100 to +3000 {–1 to +30}	4.5 {45}
F KW□□4	1000 {10}	10000 {100}	–100 to 10000 {–1 to 100}	15 {150}

– Lower range limit (vacuum limit) ;
  Silicone fill sensor: See Fig. 1
  Fluorinated fill sensor: Atmospheric pressure
– Conversion factors to different units;
  $1MPa=10^3kPa=10bar=10.19716kgf/cm^2=145.0377psi$
  $1kPa=10mbar=101.9716mmH_2O=4.01463inH_2O$

Output signal: 4 to 20mA DC with digital signal superimposed on the 4 to 20mA signal.

Power supply: Transmitter operates on 10.5V to 45V DC at transmitter terminals.
10.5V to 32V DC for the units with optional arrester.

Load limitations: see figure below

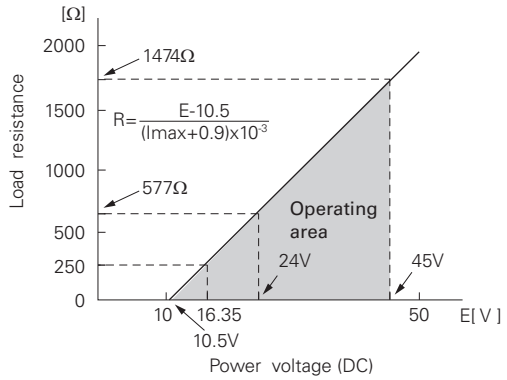

Note: For communication with HHC (Model: FXW), min. of 250Ω is required.

Hazardous locations: SEE TABLE2

Zero/span adjustment:
Zero and span are adjustable from the HHC(1). Zero and span are also adjustable externally from the adjustment screw.

Damping: Adjustable from HHC or local configurator unit with LCD display.
The time constant is adjustable between 0.06 to 32 seconds.

Zero elevation/suppression:
Zero can be elevated or suppressed within the specified range limit of each sensor model.

Normal/reverse action:
Selectable from HHC(1)

Indication: Analog indicator or 5-digit LCD meter, as specified.

Burnout direction: Selectable from HHC(1)
If self-diagnostic detect transmitter failure, the analog signal will be driven to either "Output Hold", "Output Overscale" or "Output Underscale" modes.

"Output Hold": Output signal is hold as the value just before failure happens.

"Output Overscale":
Adjustable within the range 20.0mA to 22.5mA from HHC(1)

"Output Underscale":
Adjustable within the range 3.2mA to 4.0mA from HHC(1)

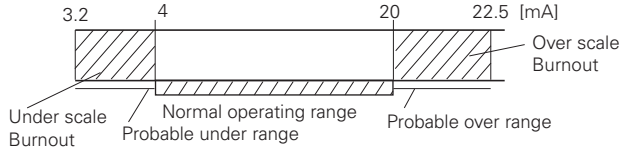

Output limits conforming to NAMUR NE43 by order.

Loop-check output:
Transmitter can be configured to provide constant signal 3.2mA through 22.5mA by HHC(1).

Temperature limit:
Ambient: –15 to +65°C
(–15 to +60°C for arrester option)
(–10 to +60°C for fluorinated oil fill transmitter)
(–10 to +60°C for silicone oil "H", "S")
(–15 to + 45°C for capillary length more than 7m)
For explosionproof units (flameproof or intrinsic safety), ambient temperature must be within the limits specified by each standard.

Process:

Fill fluid	13th digit of "Code symbols"	Process temperature	Lower limit of static press.
Fluorinated oil	W, A and D	–20 to 120°C	Atmospheric pressure
Silicone oil	H	0 to 250°C	
	Y and G	–40 to 180°C	2.7kPa abs {20mmHg abs}
	S	0 to 250°C	

Storage: –40 to +70°C

Humidity limit: 0 to 100% RH

Communication: With HHC(1) (Model FXW, consult Data Sheet No. EDS8-47), following items can be remotely displayed or configured.
Note: HHC's version must be higher than 7.0 (or FXW □□□□1–□4), for FCX-AⅢ.

Local configurator with LCD display (option):
Local configurator with 3 push button and LCD display can support following items.

Items	By communication with FXW		By local configurator (with 3 push button)	
	Display	Set	Display	Set
Tag No.	v	v	v	v
Model No.	v	v	v	v
Serial No. & Software Version	v	—	v	—
Engineering unit	v	v	v	v
Range limit	v	—	v	—
Measuring range	v	v	v	v
Damping	v	v	v	v
Output mode	v	—	v	—
Burnout direction	v	v	v	v
Calibration	v	v	v	v
Output adjust	—	v	—	v
Data	v	—	v	—
Self diagnoses	v	—	v	—
Printer (In case of FXW with printer option)	v	—	—	—
External switch lock	v	v	v	v
Transmitter display	v	v	v	v
Linearize	v	v	—	—
Rerange	v	v	v	v
Saturate current	v	v	v	v
Write protect	v	v	v	v
History – Calibration history – Ambient temperature history	 v v	 v —	 v v	 v —

EMC Conformity: EN61326-1: 2006 CE

(Note) (1) HHC: Hand Held Communicator

Performance specifications

Reference conditions, silicone oil fill, SS316 isolating diaphragms, 4 to 20mA analog output in linear mode and capillary length 3m.

Accuracy rating: (including linearity, hysteresis, and repeatability)

(Standard)

For spans greater than 1/10 of URL: ±0.25% of span

For spans below 1/10 of URL:

$$\pm\left(0.17+0.08\ \frac{0.1 \times \text{URL}}{\text{Span}}\right)\%\ \text{of span}$$

(Option) (Code; 21th digit H)

For spans greater than 1/10 of URL: ±0.1% of span

For spans below 1/10 of URL:

$$\pm\left(0.05+0.05\ \frac{0.1 \times \text{URL}}{\text{Span}}\right)\%\ \text{of span}$$

Stability: ±0.2% of upper range limit (URL) for 10 years.

Temperature effect:

Effect per 28°C change between the limits of −15°C and +65°C

Zero shift: ±0.5%/28°C
(x equal to 1/6.5 URL or more)

Zero shift; $\pm\ (0.5\ \frac{\text{URL}}{6.5 \times x})$%/28°C
(x less than 1/6.5 URL)

Total shift; ±0.75%/28°C
(x less than 1/6.5 URL or more)

Total shift; $\pm(0.25 + 0.5\ \frac{\text{URL}}{6.5 \times x})$%/28°C
(x less than 1/6.5 URL)

Where, x: Calibrated span
URL: Maximum span (Upper Range Limit)

Note : Above specifications are based on the conditions that flange and sensor unit are at the same temperature and in the same level. If temperature is different at flange, capillary or sensor unit, output variation may increase.

Overrange effect: Zero shift; 0.2% of URL/(1.5 x URL)

Supply voltage effect:

Less than 0.005% of calibrated span per 1V

Update rate: 60 msec

Step response: Time constant: 0.3s (at 23°C)
Dead time: 0.12s
(without electrical damping)

Dielectric strength:

500V AC, 50/60Hz 1 min., between circuit and earth.

Insulation resistance:

More than 100MΩ/500V DC.

Internal resistance for external field indicator:

12Ω or less

Physical specifications

Electrical connections:

G1/2, 1/2-14 NPT, Pg13.5, or M20 x 1.5 conduit, as specified.

Process connections:

JIS;
10K, 20K, 30K, 63K −40, 50A
10K, 20K, 30K, 63K −15, 20A (with Adapter)
ANSI/JPI;
150LB, 300LB, 600LB, −1 1/2", 2"
150LB, 300LB, 600LB, −1/2", 3/4" (with Adapter)
Screw connection (with Adapter) ;
Rc1/2, Rc3/4, 1/2-14NPT, 3/4-14NPT

Diaphragm extension:

0, 50, 100, 150, or 200mm as specified.
(See model code. Extended diaphragm is available only with 316L stainless steel diaphragm)

Process-wetted parts material:

Diaphragm: 316L stainless steel, Hastelloy-C Monel or Tantalum
Flange face: 316 stainless steel, Hastelloy-C lining, Monel lining or Tantalum lining
Extension: 316 stainless steel
(Refer to "Code symbols")

Non-wetted parts material:

Electronics housing: Low copper die-cast aluminum alloy finished with polyester coating (standard), or 316 stainless steel (ASTM CF8M), as specified.
Capillary: In case of 11th code "D. E. L", PE armored stainless steel.
In case of 11th code "Q. R. S", stainless steel armored stainless steel.
Mounting flange: 304 stainless steel or carbon steel, as specified.
Fill fluid: Silicone oil (standard) or fluorinated oil
Mounting bracket: 304 stainless steel.

Environmental protection:

IEC IP67 and NEMA 6/6P

Mounting: On 60.5mm (JIS 50A) pipe using mounting bracket, direct wall mounting

Mass {weight}: Transmitter approximately 8.2 to 11.2kg without options.
Add; 0.5kg for mounting bracket
4.5kg for stainless steel housing option
1.5kg per 50mm extension of diaphragm

Optional features

Indicator: A plug-in analog indicator (2.5% accuracy)
An optional 5-digit LCD meter with engineering unit is also available.

Local configurator with LCD display:
An optional 5 digits LCD meter with 3 push buttons can support items as using communication with FXW.

Arrester: A built-in arrester protects the electronics from lightning surges.
Lightning surge immunity: 4kV (1.2 × 50μs).

Oxygen service: Special cleaning procedures are followed throughout the process to maintain all process wetted parts oil-free.
The fill fluid is fluorinated oil.

Chlorine service: Oil-free procedures as above. Includes fluorinated oil for fill.

Degreasing: Process-wetted parts are cleaned, but the fill fluid is standard silicone oil. Not for use on oxygen or chlorine measurement.

Vacuum and high temperature service:
Special silicone oil and filling procedure are applied.
See Fig.1.

Optional tag plate:
An extra stainless steel tag for customer tag data is wired to the transmitter.

Coating of cell: Cell's surface is finished with epoxy/polyurethane double coating. Specify if environment is extremely corrosive.

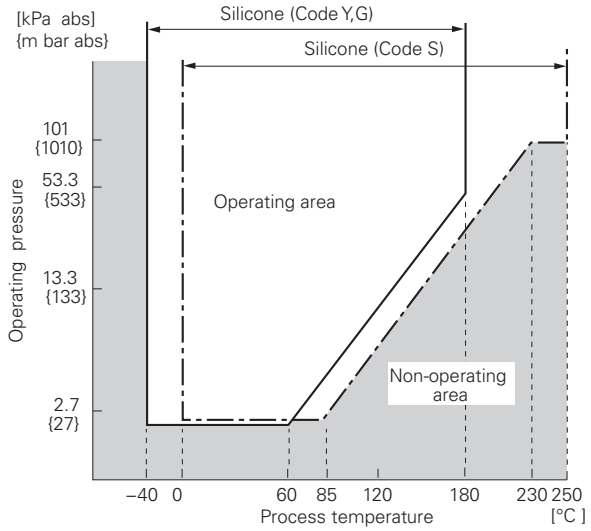

Fig. 1 Relation between process temperature and operating pressure

ACCESSORIES

Hand-held communicator:
(Model FXW, refer to Data Sheet No. EDS8-47)

CODE SYMBOLS

Digit	Description			Note	1 2 3 4 5 6 7 8 9 10 11 12 13 14 15 16 17 18 19 20 21 ← Digit No. of code
					F K W [ ] [ ] [ ] 5 - [ ] [ ] [ ] [ ] [ ] - [ ] 0 [ ] [ ] [ ] [ ] [ ] - [ ]
4	<Conduit connection>				
	Conduit connection	Case type			
	G1/2	T type			5
	1/2-14NPT	T type			6
	Pg13.5	T type			7
	M20×1.5	T type			8
	G1/2	L type			S
	1/2-14NPT	L type			T
	Pg13.5	L type			V
	M20×1.5	L type			W
5	<Flange>				
	Material	Size and rating			
	304 stainless steel	JIS 10K 40A			0
		JIS 10K 50A			1
		JIS 20K 40A			2
		JIS 20K 50A			3
		JIS 30K 40A			4
		JIS 30K 50A			5
		JIS 63K 40A			6
		JIS 63K 50A			7
		ANSI/JPI 150LB 1 1/2"			A
		ANSI/JPI 150LB 2"			B
		ANSI/JPI 300LB 1 1/2"			C
		ANSI/JPI 300LB 2"			D
		ANSI/JPI 600LB 1 1/2"			E
		ANSI/JPI 600LB 2"			F
	Carbon steel	JIS 10K 40A			G
		JIS 10K 50A			H
		JIS 20K 40A			J
		JIS 20K 50A			K
		JIS 30K 40A			L
		JIS 30K 50A			M
		JIS 63K 40A			N
		JIS 63K 50A			P
		ANSI/JPI 150LB 1 1/2"			Q
		ANSI/JPI 150LB 2"			R
		ANSI/JPI 300LB 1 1/2"			S
		ANSI/JPI 300LB 2"			T
		ANSI/JPI 600LB 1 1/2"			U
		ANSI/JPI 600LB 2"			V
	None (Wafer type)	40A, 1 1/2B			W
		50A, 2B			X
	——	Direct mounting adapter connection (* 1)		Note 1	Y
6	<Span limit [kPa] {bar} >				
	50.....500 (0.5...5)				2
	300.....3000 (3...30)				3
	1000...10000 (10...100)				4
7	<Material/diapharagm extension>				
	Diaphragm	Flange face	Diaphragm extension (mm)		
	316L stainless steel	316 stainless steel	0		V
	316L stainless steel	316 stainless steel	50	Note 2	A
	316L stainless steel	316 stainless steel	100	(* 2)	B
	316L stainless steel	316 stainless steel	150		C
	316L stainless steel	316 stainless steel	200		D
	316L stainless steel +Au coating	316 stainless steel	0		J
	Hastelloy-C	Hastelloy-C	0		H
	Hastelloy-C	316 stainless steel	0		W
	Monel	Monel	0		M
	Tantalum	Tantalum	0		T

Note1: (*1) Direct mounting adapter type is specified at 16th to 20th digit.
Direct mounting adapter is available only for 7th digit code "V".

Note2: (*2) Diaphragm extension is available only for 2" (50A) flanges.

Digit	Description			Note	1 2 3 4 5 6 7 8 9 10 11 12 13 14 15 16 17 18 19 20 21 ← Digit No. of code
					F K W 5 - - -
9	<Indicator and arrester>				
	Indicator		Arrester		
	None		None		A
	Analog, 0 to 100% linear scale		None		B
	Analog, custom scale		None		D
	None		Yes		E
	Analog, 0 to 100% linear scale		Yes		F
	Analog, custom scale		Yes		H
	Digital, 0 to 100% linear scale		None		L
	Digital, custom scale		None		P
	Digital, 0 to 100% linear scale		Yes		Q
	Digital, custom scale		Yes		S
	Digital, 0 to 100% linear scale (Local configurator unit with LCD display)		None		1
	Digital, custom scale (Local configurator unit with LCD display)		None		2
	Digital, 0 to 100% linear scale (Local configurator unit with LCD display)		Yes		4
	Digital, custom scale (Local configurator unit with LCD display)		Yes		5
10	<Approvals for hazardous locations>				
	None (for ordinary locations)				A
	TIIS, Flameproof (Cable gland seal) (*7)			Note 7	C
	TIIS, Intrinsic safety				G
	FM, Flameproof (or explosionproof) (*10)			Note 10	D
	FM, Intrinsic safety and nonincentive				H
	FM Combined of flameproof and intrinsic safety (*10)			Note 10	V
	ATEX Flameproof (*9)			Note 9	X
	ATEX Intrinsic safety				K
	ATEX Type n				P
	ATEX Combined of flameproof and intrinsic safety (*9)			Note 9	M
	IECEx Scheme, Flameproof (*9)			Note 9	R
	IECEx Scheme, Intrinsic safety				T
	CSA, Flameproof (or explosionproof) (*10)			Note 10	E
	CSA, Intrinsic safety and nonincentive				J
	NEPSI, Flameproof (or exprosionproof)				F
	NEPSI, Intrinsic safety				S
	NEPSI, Combined of flameproof and intrinsic safety				U
11	<Capillary and mounting bracket>				
	Mounting bracket	Capillary	Armor of Capillary		
	Stainless steel	1.5m	PE	Note 5	D
	Stainless steel	3m	PE		E
	Stainless steel	5m	PE		L
	Stainless steel	6m	PE	(*5)	F
	Stainless steel	7m	PE		M
	Stainless steel	8m	PE		N
	Stainless steel	10m	PE		P
	Stainless steel	1.5m	Stainless steel		Q
	Stainless steel	3m	Stainless steel		R
	Stainless steel	5m	Stainless steel		S
	Stainless steel	6m	Stainless steel		T
	Stainless steel	7m	Stainless steel		V
	Stainless steel	8m	Stainless steel		W
	Stainless steel	10m	Stainless steel		X
12	<Options>				
	Extra SS tag plate	Stainless steel elec. housing	Coating of cell		
	None	None	None		Y
	Yes	None	None	Note 3	B
	None (*3)	None	Yes		M
	Yes	None	Yes		N
	None	Yes (*6)	Yes	Note 6	P
	Yes	Yes	Yes	Note 6	Q
13	<Special applications and fill fluid>				
	Treatment	Fill fluid			
	Standard	Silicone oil			Y
	Standard	Fluorinated oil			W
	Degreasing	Silicone oil			G
	Oxygen service	Fluorinated oil (7th digit code "V", "W", "A", "B", "C" and "D")			A
	Chlorine service	Fluorinated oil (7th digit code "H" and "T")			D
	High temp. 250°C	Silicone oil (7th digit code "V", "W", "A", "B", "C", "D" and "H")		Note 11	H
	High temp. and vacuum (250°C)	Silicone oil (7th digit code "V", "W", "A", "B", "C" and "D")		Note 11	S
14	<Teflon membrane>				
	None				Y
	Yes (Available for 7th digit code "V", "J", "W. Not available for 5th digit code "Y" and 13th digit code "H", "S".)				C
15	<Bolt/nut> (*4)			Note 4	
	None		6th digit code "2", "3"		Y
	Cr-Mo alloy hexagon socket head cap bolt/carbon steel nut		6th digit code "4"		A
	Cr-Mo alloy hexagon bolt/carbon steel nut				B
	304 stainless steel bolt/304 stainless steel nut				E
	316 stainless steel bolt/316 stainless steel nut				U

Note3: (*3) Customer tag number can be engraved on standard stainless steel name plate. If extra tag plate is required, select "Yes".
Note4: (*4) In case of tropical use, select stainless bolts and nuts.
Note5: (*5) Available for 13th digit code "Y, W, G, A, D".
Note6: (*6) Not available for 10th digit code "C".
Note7: (*7) Available for 4th digit code "S".
Note9: (*9) Available for 4th digit code "6", "8", "T", "W".
Note10: (*10) Available for 4th digit code "6", "T".
Note11: (*11) Treatment: Standard.

Specifications of connecting pipeless adapter {for 15, 20A (1/2, 3/4") connection} and others

Note 1. When odering the instrument with connecting pipeless adapter, specify "Y" in the 5th digit of Code Symbol, and specify 16th digit to 20th digit.
When odering the instrument without connecting pipeless adapter, nothing should be filled in the 16th to 20th digit.
2. Unless otherwise described in the specifications, leave the 21st digit blank.

Digit	Description	Note	1 2 3 4 5 6 7 8	9 10 11 12 13	14 15 16 17 18 19 20	21 ← Digit No. of code
			F K W			
16, 17	<Process connection (connecting pipeless adapter)>					
	JIS 10K 15A				1 1	
	JIS 10K 20A				1 2	
	JIS 20K 15A				2 1	
	JIS 20K 20A				2 2	
	JIS 30K 15A				3 1	
	JIS 30K 20A				3 2	
	JIS 63K 15A				6 1	
	JIS 63K 20A				6 2	
	ANSI/JPI 150LB 1/2"				1 H	
	ANSI/JPI 150LB 3/4"				1 T	
	ANSI/JPI 300LB 1/2"				2 H	
	ANSI/JPI 300LB 3/4"				2 T	
	ANSI/JPI 600LB 1/2"				4 H	
	ANSI/JPI 600LB 3/4"				4 T	
	Screw connection Rc1/2				S R	
	Screw connection Rc3/4				S 2	
	Screw connection Rc1/2 - 14NPT				S N	
	Screw connection Rc3/4 - 14NPT				S T	
18	<Material (connecting pipeless adapter)> Adapter Bolts/nuts (* 12) 316 Stainless Steel Cr-Mo steel/carbon steel	Note 12			W	
19	<Vent/drain (for connecting pipeless adapter)> Standard Long type				A N	
20	<Gasket (for connecting pipeless adapter)> Standard (Teflon)(Only Y, W, G, A and D can be specified on 13th digit).				1	
	For high temperature (spiral gasket) (Only H and S can be specified on 13th digit).				2	
21	<Other options> (* 13) High accuracy type Instruction manual attached Instruction manual unattached High accuracy type Instruction manual unattached	Note 13				H L T

Note12: (* 12) For connection of transmitter receiving pressure unit and connecting pipeless adapter
Note13: (* 13) In other option is not necessary, 21st digit code is blank.
In case of 21st digit code is blank, instruction manual attached.

ORDERING INFOMATION

When ordering this instrument, specify.

1. CODE SYMBOLS
2. Measuring range.
3. Output orientation (burnout direction) when abnormality is occurred in the transmitter.
   Hold / Overscale / Underscale
   Unless otherwise specified, output hold function is supplied.
4. Indication method (indicated value and unit) in case of the actual scale (code D, H, P, S 2,5 on 9th digit).
5. Tag No. (up to 14 alphanumerical characters), if required.

OUTLINE DIAGRAM (Unit:mm)

<AMP. case: L type>

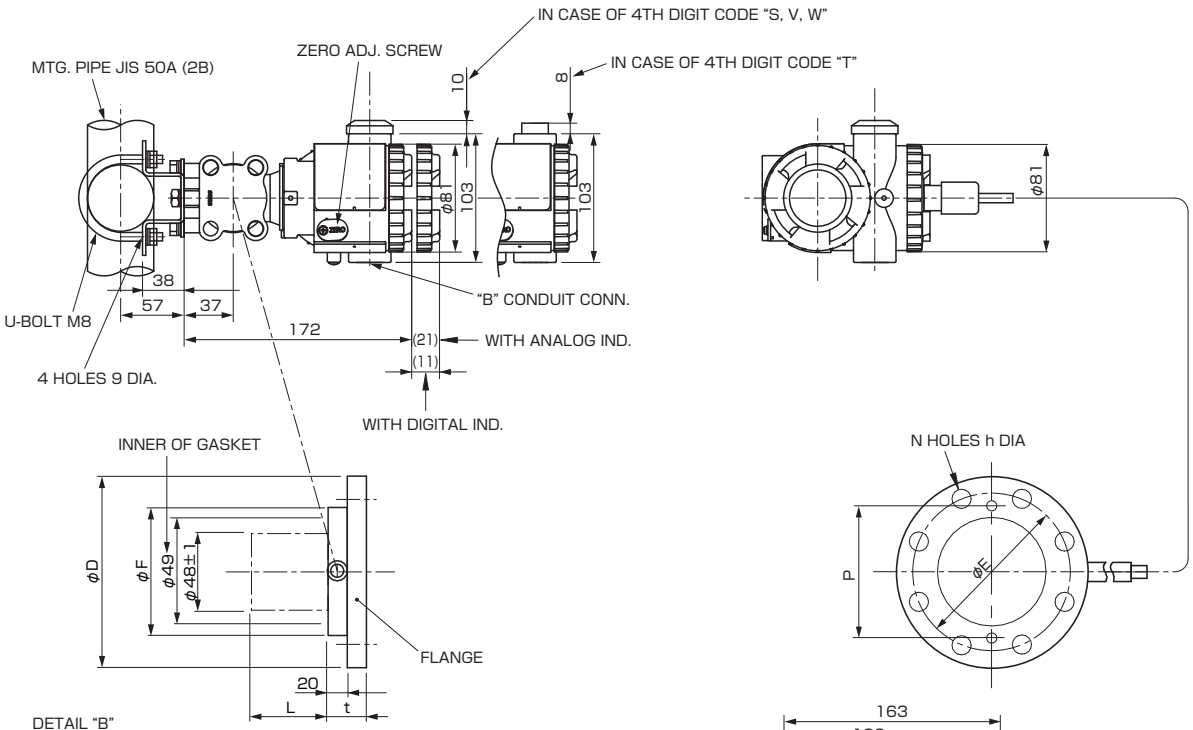

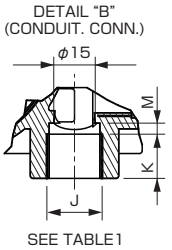

SEE TABLE1

11th digit of the code symbols	S (m)
D, Q	1.5
E, R	3
L, S	5
F, T	6
M, V	7
N, W	8
P, X	10

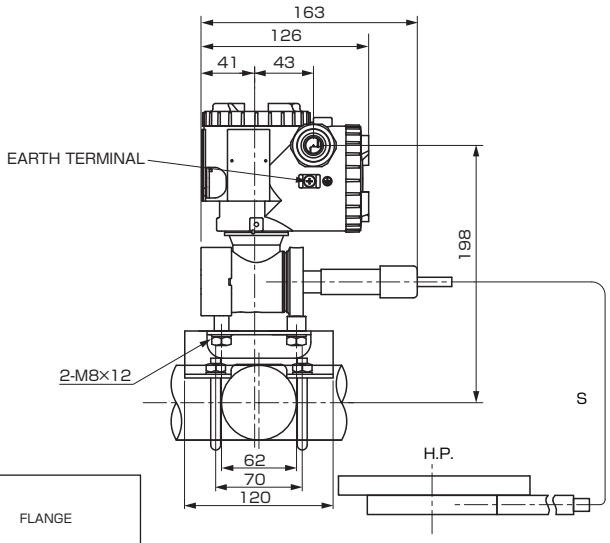

4th digit of the code symbols	conduit conn.		
	J	K	M
S	G1/2	18	2
T	1/2-14NPT	16	4
V	Pg13.5	10.5	4.5
W	M20×1.5	16	4

TABLE 1

7th digit of the code symbols	L	MASS. APPROX. (kg)
V, W, J, H, M, T	0	8.2
A	50	9.2
B	100	10.2
C	150	10.7
D	200	11.2

5th digit of the code symbols	ϕD	ϕE	ϕF		t	P	N-ϕh	FLANGE
			Standard materials specification Note 1	Corrosion-resistant materials specification Note 2				
0, G	140	105	84	73	36	60	4-19	JIS-10K-40A
1, H	155	120	84	100	36	71	4-19	JIS-10K-50A
2, J	140	105	84	73	38	60	4-19	JIS-20K-40A
3, K	155	120	84	100	38	71	8-19	JIS-20K-50A
4, L	160	120	84	73	42	60	4-23	JIS-30K-40A
5, M	165	130	84	100	42	71	8-19	JIS-30K-50A
6, N	175	130	84	73	52	60	4-25	JIS-63K-40A
7, P	185	145	84	100	54	71	8-23	JIS-63K-50A
A, Q	127	95.4	84	73	37.5	60	4-16	ANSI/JPI-150LB-1 1/2B
B, R	152	120.6	84	100	39.5	71	4-20	ANSI/JPI-150LB-2B
C, S	156	114.3	84	73	41	60	4-23	ANSI/JPI-300LB-1 1/2B
D, T	165	127	84	100	42.5	71	8-20	ANSI/JPI-300LB-2B
E, U	156	114.3	84	73	42.5	60	4-23	ANSI/JPI-600LB-1 1/2B
F, V	165	127	84	100	45.5	71	8-20	ANSI/JPI-600LB-2B

Note1) In case of the 7th digit of type code is V, A, B, C, D, J or W.
Note2) In case of the 7th digit of type code is H, M, T.

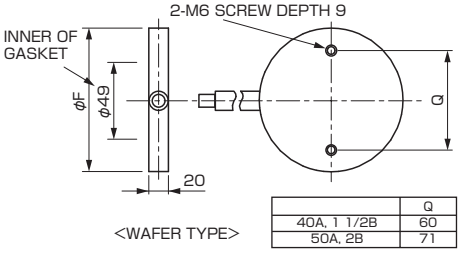

<WAFER TYPE>

	Q
40A, 1 1/2B	60
50A, 2B	71

CONNECTION DIAGRAM

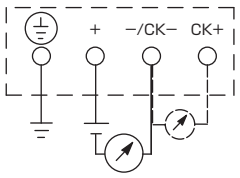

<SS TAG PLATE>

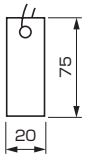

OPTION PARTS FOR FLAMEPROOF OF TIIS (JAPAN)

10th digit code C (Cable gland type)
NOTE1)

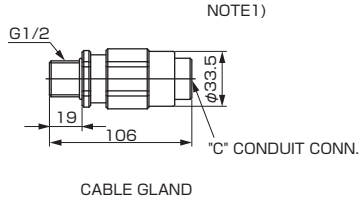

CABLE GLAND

NOTE1) IN CASE OF 10TH CODE "C", ϕ11 CABLE IS SUITBLE.

<AMP. case: T type>

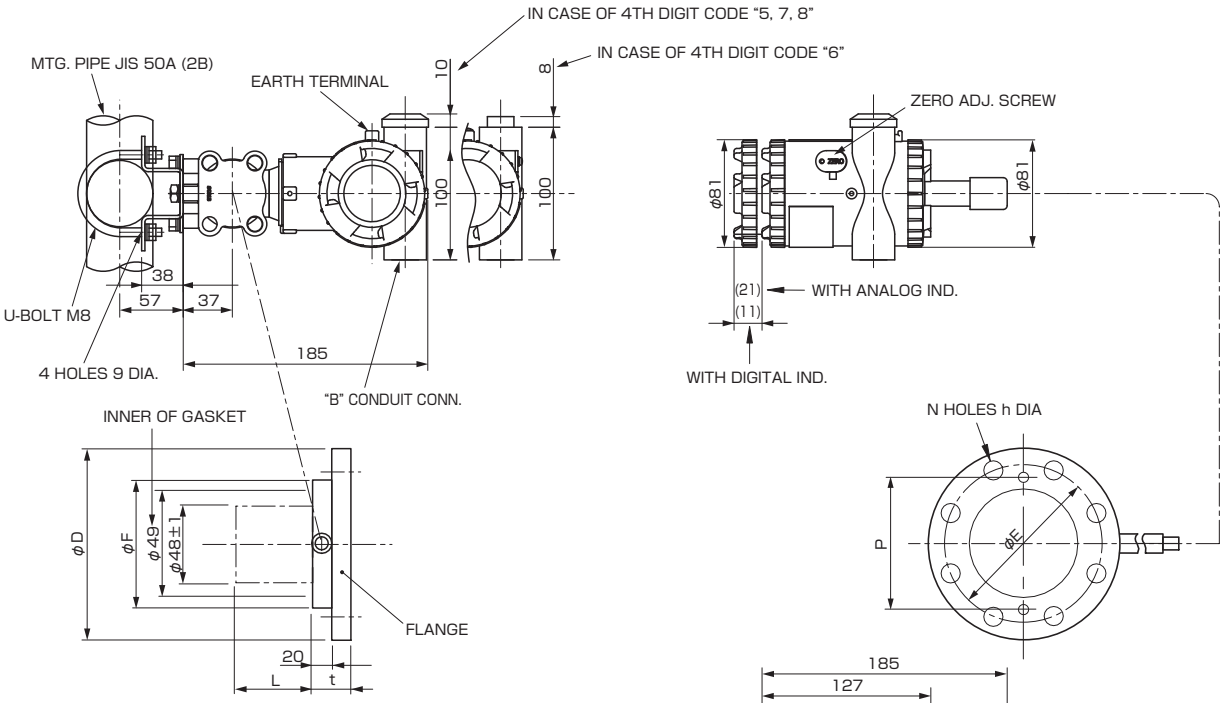

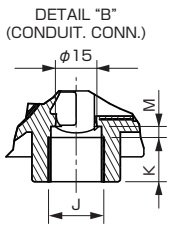

SEE TABLE1

11th digit of the code symbols	S (m)
D, Q	1.5
E, R	3
L, S	5
F, T	6
M, V	7
N, W	8
P, X	10

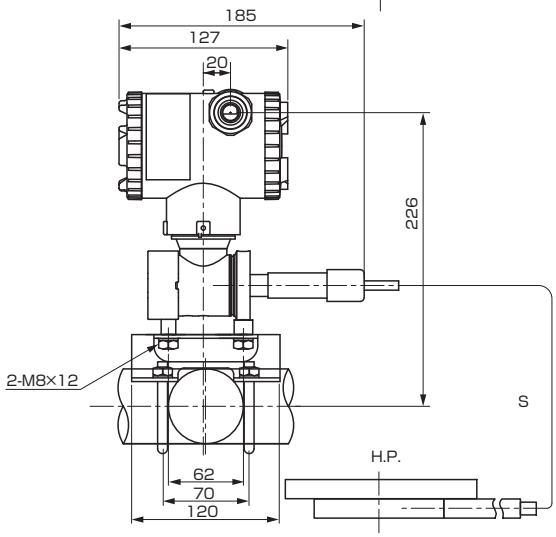

4th digit of the code symbols	conduit conn.		
	J	K	M
5	G1/2	18	2
6	1/2-14NPT	16	4
7	Pg13.5	10.5	4.5
8	M20×1.5	16	4

TABLE 1

7th digit of the code symbols	L	MASS. APPROX. (kg)
V, W, J, H, M, T	0	8.2
A	50	9.2
B	100	10.2
C	150	10.7
D	200	11.2

5th digit of the code symbols	ϕD	ϕE	ϕF		t	P	N-ϕh	FLANGE
			Standard materials specification Note 1	Corrosion-resistant materials specification Note 2				
0, G	140	105	84	73	36	60	4-19	JIS-10K-40A
1, H	155	120	84	100	36	71	4-19	JIS-10K-50A
2, J	140	105	84	73	38	60	4-19	JIS-20K-40A
3, K	155	120	84	100	38	71	8-19	JIS-20K-50A
4, L	160	120	84	73	42	60	4-23	JIS-30K-40A
5, M	165	130	84	100	42	71	8-19	JIS-30K-50A
6, N	175	130	84	73	52	60	4-25	JIS-63K-40A
7, P	185	145	84	100	54	71	8-23	JIS-63K-50A
A, Q	127	95.4	84	73	37.5	60	4-16	ANSI/JPI-150LB-1 1/2B
B, R	152	120.6	84	100	39.5	71	4-20	ANSI/JPI-150LB-2B
C, S	156	114.3	84	73	41	60	4-23	ANSI/JPI-300LB-1 1/2B
D, T	165	127	84	100	42.5	71	8-20	ANSI/JPI-300LB-2B
E, U	156	114.3	84	73	42.5	60	4-23	ANSI/JPI-600LB-1 1/2B
F, V	165	127	84	100	45.5	71	8-20	ANSI/JPI-600LB-2B

Note1) In case of the 7th digit of type code is V, A, B, C, D, J or W.
Note2) In case of the 7th digit of type code is H, M, T.

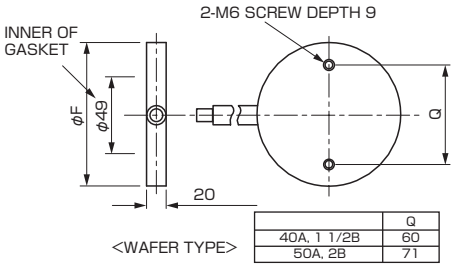

<WAFER TYPE>

	Q
40A, 1 1/2B	60
50A, 2B	71

CONNECTION DIAGRAM

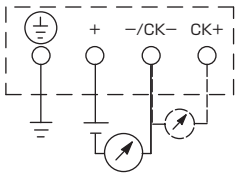

<SS TAG PLATE>

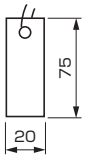

<AMP. case: L type> (with direct mount adaptor) screw connection type

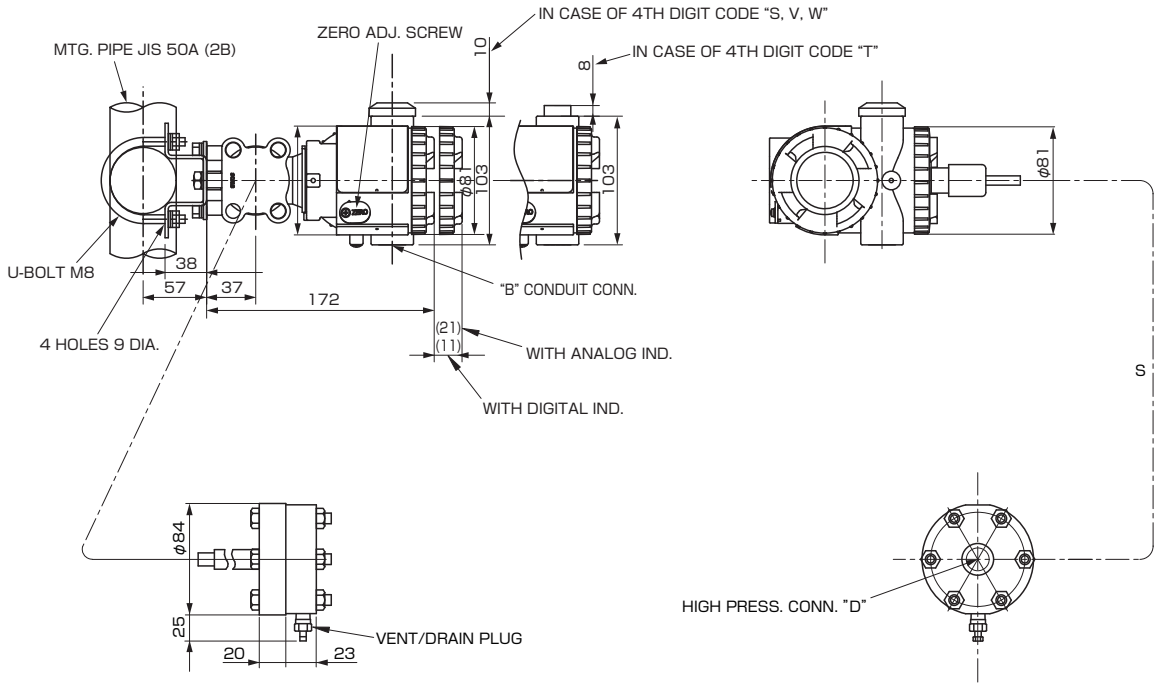

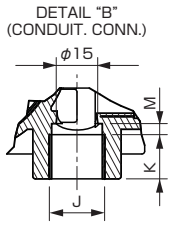

SEE TABLE1

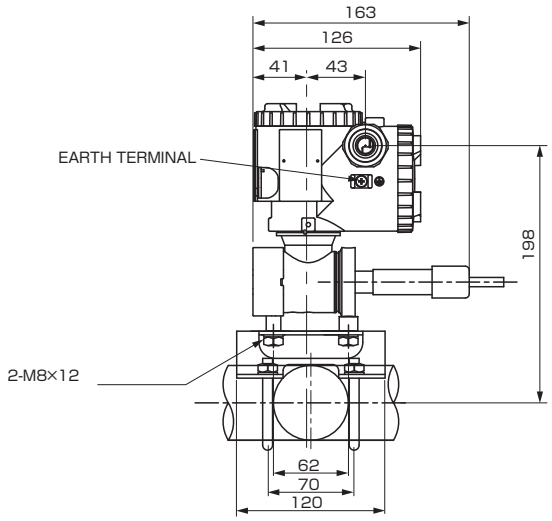

4th digit of the code symbols	conduit conn.		
	J	K	M
S	G1/2	18	2
T	1/2-14NPT	16	4
V	Pg13.5	10.5	4.5
W	M20×1.5	16	4

TABLE 1

11th digit of the code symbols	S (m)
D, Q	1.5
E, R	3
L, S	5
F, T	6
M, V	7
N, W	8
P, X	10

16th digit of the code symbols	17th digit of the code symbols	Press. conn. "D"
S	R	Rc 1/2
S	N	1/2-14NPT
S	2	Rc 3/4
S	T	3/4-14NPT

CONNECTION DIAGRAM

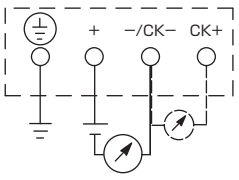

<SS TAG PLATE>

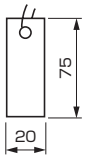

OPTION PARTS FOR FLAMEPROOF OF TIIS (JAPAN)

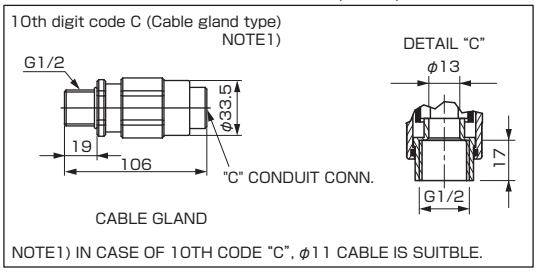

<AMP. case: T type> (with direct mount adaptor) screw connection type

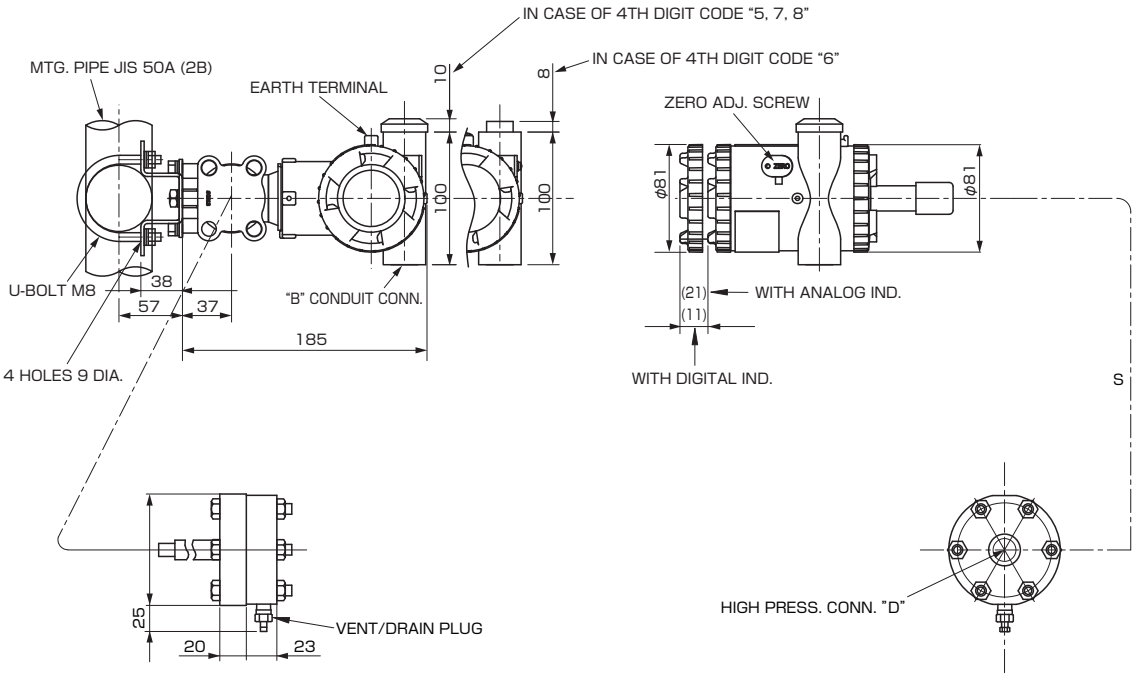

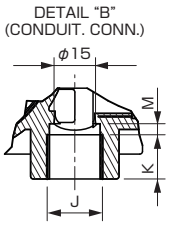

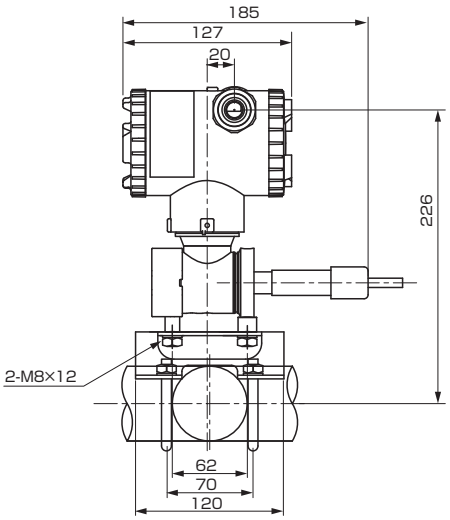

4th digit of the code symbols	conduit conn.		
	J	K	M
5	G1/2	18	2
6	1/2-14NPT	16	4
7	Pg13.5	10.5	4.5
8	M20×1.5	16	4

TABLE 1

11th digit of the code symbols	S (m)
D, Q	1.5
E, R	3
L, S	5
F, T	6
M, V	7
N, W	8
P, X	10

16th digit of the code symbols	17th digit of the code symbols	Press. conn. "D"
S	R	Rc 1/2
S	N	1/2-14NPT
S	2	Rc 3/4
S	T	3/4-14NPT

CONNECTION DIAGRAM

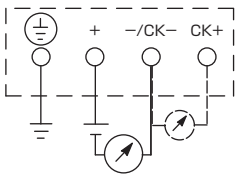

<SS TAG PLATE>

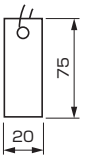

<AMP. case: L type> (with direct mount adaptor)

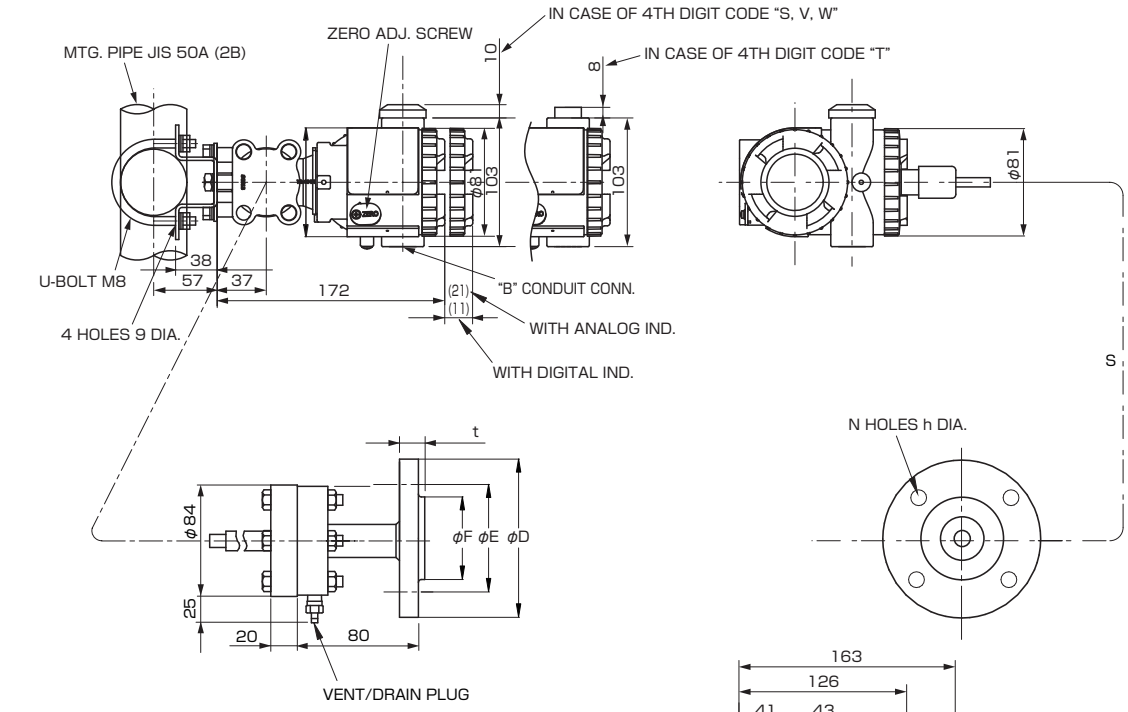

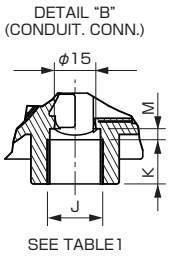

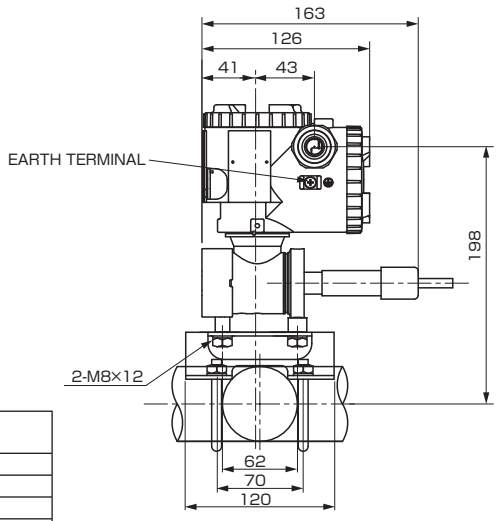

16th digit of the code symbols	17th digit of the code symbols	ϕD	ϕE	ϕF	t	N-ϕh	FLANGE
1	1	95	70	51	12	4-15	JIS-10K-15A
1	2	100	75	56	14	4-15	JIS-10K-20A
2	1	95	70	51	14	4-15	JIS-20K-15A
2	2	100	75	56	16	4-15	JIS-20K-20A
3	1	115	80	55	18	4-19	JIS-30K-15A
3	2	120	85	60	18	4-19	JIS-30K-20A
6	1	120	85	55	23	4-19	JIS-63K-15A
6	2	135	95	60	25	4-23	JIS-63K-20A
1	H	89	60.3	34.9	11.5	4-16	ANSI/JPI-150LB 1/2B
1	T	98	69.9	42.9	13	4-16	ANSI/JPI-150LB 3/4B
2	H	95	66.7	34.9	14.5	4-16	ANSI/JPI-300LB 1/2B
2	T	117	82.5	42.9	16	4-20	ANSI/JPI-300LB 3/4B
4	H	95	66.7	34.9	14.5	4-16	ANSI/JPI-600LB 1/2B
4	T	117	82.5	42.9	16	4-20	ANSI/JPI-600LB 3/4B

4th digit of the code symbols	conduit conn.		
	J	K	M
S	G1/2	18	2
T	1/2-14NPT	16	4
V	Pg13.5	10.5	4.5
W	M20×1.5	16	4

11th digit of the code symbols	S (m)
D, Q	1.5
E, R	3
L, S	5
F, T	6
M, V	7
N, W	8
P, X	10

TABLE 1

CONNECTION DIAGRAM

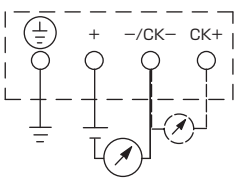

<SS TAG PLATE>

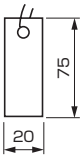

OPTION PARTS FOR FLAMEPROOF OF TIIS (JAPAN)

10th digit code C (Cable gland type) NOTE1)

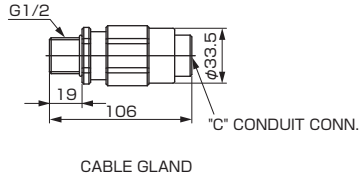

NOTE1) IN CASE OF 10TH CODE "C", ϕ11 CABLE IS SUITBLE.

<AMP. case: T type> (with direct mount adaptor)

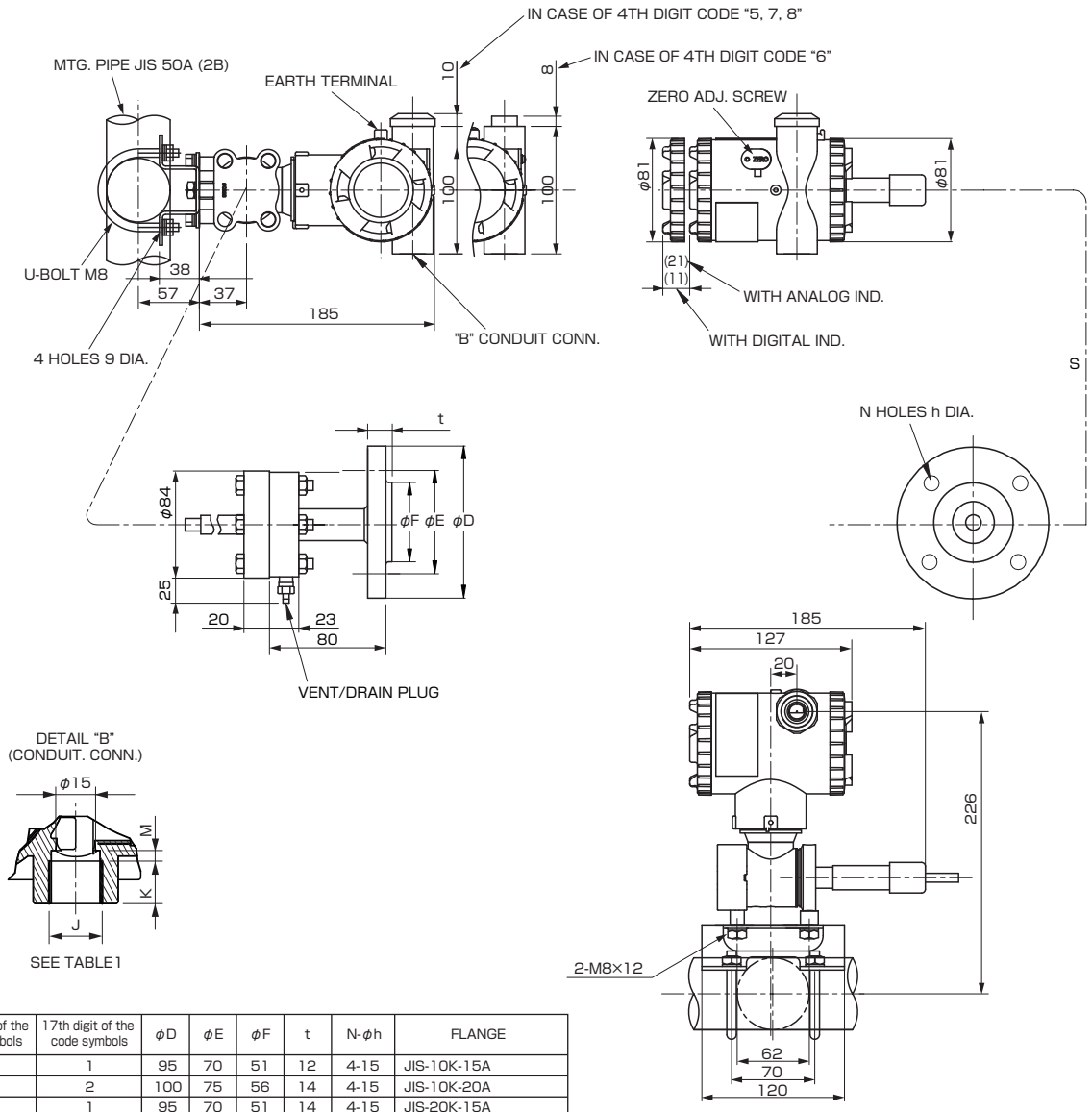

16th digit of the code symbols	17th digit of the code symbols	φD	φE	φF	t	N-φh	FLANGE
1	1	95	70	51	12	4-15	JIS-10K-15A
1	2	100	75	56	14	4-15	JIS-10K-20A
2	1	95	70	51	14	4-15	JIS-20K-15A
2	2	100	75	56	16	4-15	JIS-20K-20A
3	1	115	80	55	18	4-19	JIS-30K-15A
3	2	120	85	60	18	4-19	JIS-30K-20A
6	1	120	85	55	23	4-19	JIS-63K-15A
6	2	135	95	60	25	4-23	JIS-63K-20A
1	H	89	60.3	34.9	11.5	4-16	ANSI/JPI-150LB 1/2B
1	T	98	69.9	42.9	13	4-16	ANSI/JPI-150LB 3/4B
2	H	95	66.7	34.9	14.5	4-16	ANSI/JPI-300LB 1/2B
2	T	117	82.5	42.9	16	4-20	ANSI/JPI-300LB 3/4B
4	H	95	66.7	34.9	14.5	4-16	ANSI/JPI-600LB 1/2B
4	T	117	82.5	42.9	16	4-20	ANSI/JPI-600LB 3/4B

4th digit of the code symbols	conduit conn.		
	J	K	M
5	G1/2	18	2
6	1/2-14NPT	16	4
7	Pg13.5	10.5	4.5
8	M20×1.5	16	4

TABLE 1

11th digit of the code symbols	S (m)
D, Q	1.5
E, R	3
L, S	5
F, T	6
M, V	7
N, W	8
P, X	10

CONNECTION DIAGRAM

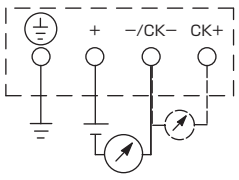

<SS TAG PLATE>

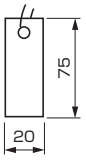

TABLE 2

<table>
<tr><th>Authorities</th><th>Intrinsic safety</th></tr>
<tr><td>ATEX</td><td>Ex II 1 G
Ex ia IIC T5 Tamb = –40°C to +50°C
Ex ia IIC T4 Tamb = –40°C to +70°C

Entity Parameters:
Ui=28V, Ii=94.3mA, Pi=0.66W,
Ci=26nF (Without Arrester), Li=0.6mH (Without analog indicator),
Ci=36nF (With Arrester), Li=0.7mH (With analog indicator)</td></tr>
<tr><td>Factory Mutual</td><td>Class I II III
Div.1 Groups A, B, C, D, E, F, G
T4 Entity Type 4X
<table>
<tr><th colspan="2">Model code</th><th rowspan="2">Tamb</th></tr>
<tr><th>9th digit</th><th>13th digit</th></tr>
<tr><td>A,B,D</td><td>Y,G,H,S</td><td>–40°C to +85°C</td></tr>
<tr><td>L,P,1,2</td><td>Y,G,H,S</td><td>–20°C to +80°C</td></tr>
<tr><td>Q,S,4,5</td><td>Y,G,H,S</td><td>–20°C to +60°C</td></tr>
<tr><td>E,F,H</td><td>Y,G,H,S</td><td>–40°C to +60°C</td></tr>
<tr><td>–</td><td>W,A,D</td><td>–10°C to +60°C</td></tr>
</table>
Entity Parameters:
Vmax=78V, Imax=94.3mA, Pi=0.66W,
Ci=35.98nF, Li=0.694mH</td></tr>
<tr><td>CSA</td><td>Class I
Div.1 Groups A, B, C, D
Class II
Div.1 Groups E, F, G
Class III
Div.1
Temp Code T5 Tamb max = +50°C
Temp Code T4 Tamb max = +70°C
Entity Parameters:
Vmax=28V, Imax=94.3mA, Ci=25nF (Without Arrester),
Ci=36nF (With Arrester),Li=0.6mH (Without analog meter),
Li=0.7mH (With analog meter)</td></tr>
<tr><td>TIIS</td><td>Ex ia IIC T4
Tamb max = +60°C
Entity Parameters:
Ui=28V, Ii=94.3mA, Pi=0.66W,
Ci=38.4nF, Li=0.694mH</td></tr>
<tr><td>IECEx Scheme</td><td>Ex ia IIC T4
Tamb = –40°C to +70°C
Ex ia IIC T5
Tamb = –40°C to +50°C
Entity Parameters:
Ui=28V, Ii=94.3mA, Pi=0.66W,
Ci=26nF (Without Arrester), Li=0.6mH (Without analog indicator),
Ci=36nF (With Arrester), Li=0.7mH (With analog indicator)</td></tr>
<tr><td>NEPSI</td><td>Ex ia IIC T4
Ex d IIB+H_2 T6 / Ex ia IIC T4
<table>
<tr><th colspan="2">Model code</th><th rowspan="2">Tamb</th></tr>
<tr><th>9th digit</th><th>13th digit</th></tr>
<tr><td>A,B,D</td><td>Y,G,H,S</td><td>–40°C to +85°C</td></tr>
<tr><td>L,P,1,2</td><td>Y,G,H,S</td><td>–20°C to +80°C</td></tr>
<tr><td>Q,S,4,5</td><td>Y,G,H,S</td><td>–20°C to +60°C</td></tr>
<tr><td>E,F,H</td><td>Y,G,H,S</td><td>–40°C to +60°C</td></tr>
<tr><td>–</td><td>A,W,D</td><td>–10°C to +60°C</td></tr>
</table>
Entity Parameters:
Ui=42.4V, Ii=113mA, Pi=1W,
Ci=35.98nF, Li=0.694mH</td></tr>
</table>

<table>
<tr><th>Authorities</th><th>Flameproof</th></tr>
<tr><td>ATEX</td><td>Ex II 2 GD
Ex d IIC T6 IP66/67 T85°C
Tamb = –40°C to +65°C
Ex d IIC T5 IP66/67 T100°C
Tamb = –40°C to +85°C</td></tr>
<tr><td>Factory Mutual</td><td>Class I
Div.1 Groups B, C, D
T6 Type 4X
Class II III
Div.1 Groups E, F, G
T6 Type 4X
Tamb max = +60°C</td></tr>
<tr><td>CSA</td><td>Class I
Div.1 Groups C, D
Class II
Div.1 Groups E, F, G
Class III
Div.1

Note) “Seal Not Required” enclosure is allowed.</td></tr>
<tr><td>TIIS</td><td>Ex do IIB+H_2 T4
Tamb max = +55°C
Maximum process temp. = +120°C</td></tr>
<tr><td>IECEx Scheme</td><td>Ex d IIC T5 IP66/67
Tamb = –40°C to +85°C
Ex d IIC T6 IP66/67
Tamb = –40°C to +65°C</td></tr>
<tr><td>NEPSI</td><td>Ex d IIB+H_2 T6
Tamb = –40°C to +60°C</td></tr>
</table>

<table>
<tr><th>Authorities</th><th>Type n
Nonincendive</th></tr>
<tr><td>ATEX</td><td>Ex II 3 GD
EEx nL IIC T5 Tamb = –40°C to +50°C
EEx nL IIC T4 Tamb = –40°C to +70°C
Specific Parameters:
Model without arrester:
Ui=42.4V, Ii=113mA, Pi=1W,
Ci=25.18nF, Li=0.694mH
Model with arrester:
Ui=32V, Ii=113mA, Pi=1W,
Ci=35.98nF, Li=0.694mH

EEx nAL IIC T5 Tamb = –40°C to +50°C
EEx nAL IIC T4 Tamb = –40°C to +70°C
Specific Parameters:
Model without arrester:
Umax=42.4V, Imax=113mA, Pmax=1W,
Model with arrester:
Umax=32V, Imax=113mA, Pmax=1W</td></tr>
<tr><td>Factory Mutual (pending)</td><td>Class I II III
Div.2 Groups A, B, C, D, F, G
T4 Entity Type 4X
<table>
<tr><th colspan="2">Model code</th><th rowspan="2">Tamb</th></tr>
<tr><th>9th digit</th><th>13th digit</th></tr>
<tr><td>A,B,D</td><td>Y,G,H,S</td><td>–40°C to +85°C</td></tr>
<tr><td>L,P,1,2</td><td>Y,G,H,S</td><td>–20°C to +80°C</td></tr>
<tr><td>Q,S,4,5</td><td>Y,G,H,S</td><td>–20°C to +60°C</td></tr>
<tr><td>E,F,H</td><td>Y,G,H,S</td><td>–40°C to +60°C</td></tr>
<tr><td>–</td><td>W,A,D</td><td>–10°C to +60°C</td></tr>
</table></td></tr>
<tr><td>CSA</td><td>Class I
Div.2 Groups A, B, C, D
Class II
Div.2 Groups E, F, G
Class III
Div.2
Temp Code T5 Tamb max = +50°C
Temp Code T4 Tamb max = +70°C
Entity Parameters:
Vmax=28V, Ci=25.18nF (Without Arrester),
Ci=35.98nF (With Arrester), Li=0.694mH</td></tr>
</table>

⚠ Caution on Safety

*Before using this product, be sure to read its instruction manual in advance.

Fuji Electric Co., Ltd.

International Sales Div
Sales Group
Gate City Ohsaki, East Tower, 11-2, Osaki 1-chome,
Shinagawa-ku, Tokyo 141-0032, Japan
http://www.fujielectric.com
Phone: 81-3-5435-7280, 7281 Fax: 81-3-5435-7425
http://www.fjielectric.com/products/instruments/

Information in this catalog is subject to change without notice.

Printed in Japan