FC SERIES PT TYPE DISTRIBUTOR (48mm width)

DATA SHEET

PTL

The FC series PT type distributor converts a current signal (4 to 20mA DC) from the transmitter into a voltage signal (1 to 5V DC) then distributes the voltage signal to each receiver. In addition, the distributor is provided with built-in transmitter power supply.

Its structure is plug-in style.



SPECIFICATIONS

INPUT SPECIFICATION

Input signal: 1 point

Input type	Current
Input signal	4 to 20mA DC
Input resistance	250Ω

OUTPUT SPECIFICATION

Output signal: 2 points

Output type	Voltage
Output signal	1 to 5 V DC
Allowable load resistance	500kΩ or over (reception, non-insulation) 15kΩ or over (with output buffer)

POWER SUPPLY

Power supply: 24V DC (20 to 30V DC)
24V AC, +13%, –10%,(47 to 63Hz)
100V AC (85 to 132V AC / 47 to 63Hz)
200V AC (187 to 264V AC / 47 to 63Hz)
as specified.

Power consumption:
Approx. 2W (at DC power)
Approx. 6VA (at AC power)

OPERATION CONDITION

Ambient temperature:
0 to 50°C

Ambient humidity:
Less than 90%RH (no condensation)

Outline dimension (HxWxD):
96 x 52 x130mm

Mass: Appox. 300g

Housing: Plastic housing (color: black)

Mounting method:
Panel mounting or DIN rail mounting

CHARACTERISTICS

Accuracy: Less than ±0.1% of full span

Response time: Less than 0.1 sec. (90% response)

Dielectric strengh: 1500V AC, 1 min. (indicated below)

Insolation resistance:
500V DC, 100MΩ or over (indicated below)

Reception only: Input/Output - Ground

Non-insulation type:
Input/Output•Power - Ground

Non-insulation with buffer:
Input/Output•Power - Ground

Power insulation with buffer:
Input/Output - Power - Ground

Power I/O insulation with buffer:
Input - Output - Power - Ground

Ambient temperature effect:
Less than ±0.15% of full span/10°C

Power regulation effect:
Less than ±0.1% of full span

CODE SYMBOLS

1	2	3	4	5	6	7	8	Description	
P	L	T	2	V			1		
			2					**Input signal** 4 to 20mA DC	
				V				**Output signal** 1 to 5V DC	
					A	0		**Output system** Reception only	**Power supply** None
					B	1		Non-insulation type	24V DC
					C	1		Non-insulation with buffer	24V DC
					D	1		Power insulation with buffer	24V DC/ 24V AC (50/60Hz)
					E	1		Power I/O insulation with buffer	24V DC/24V AC (50/60Hz)
					D	2		Power insulation with buffer	100V AC (50/60Hz)
					E	2		Power I/O insulation with buffer	100V AC (50/60Hz)
					D	3		Power insulation with buffer	200V AC (50/60Hz)
					E	3		Power I/O insulation with buffer	200 V AC (50/60Hz)

FUNCTIONAL DIAGRAM

1. Reception only type

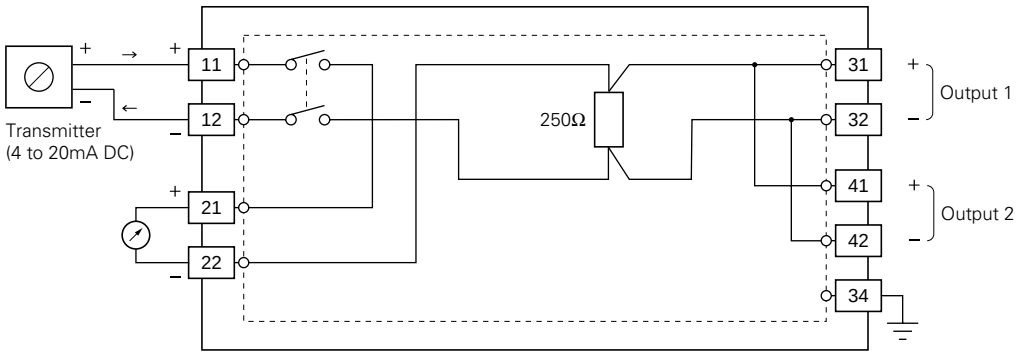

2. Non-insulation type

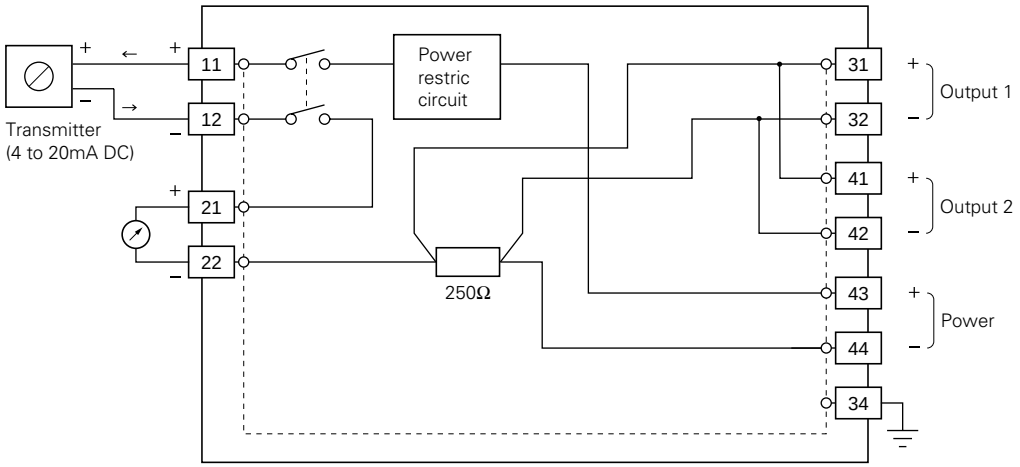

3. Power insulation with buffer

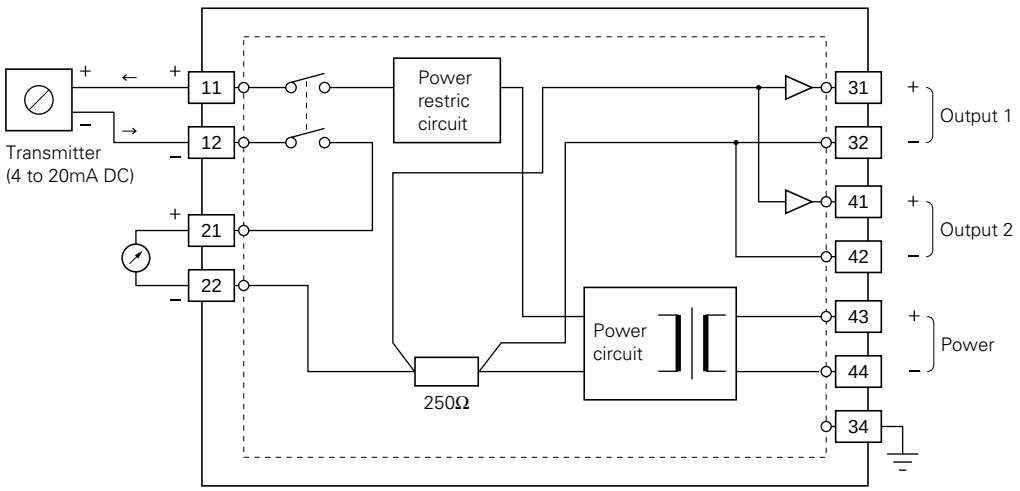

4. Power input/output insulation with buffer

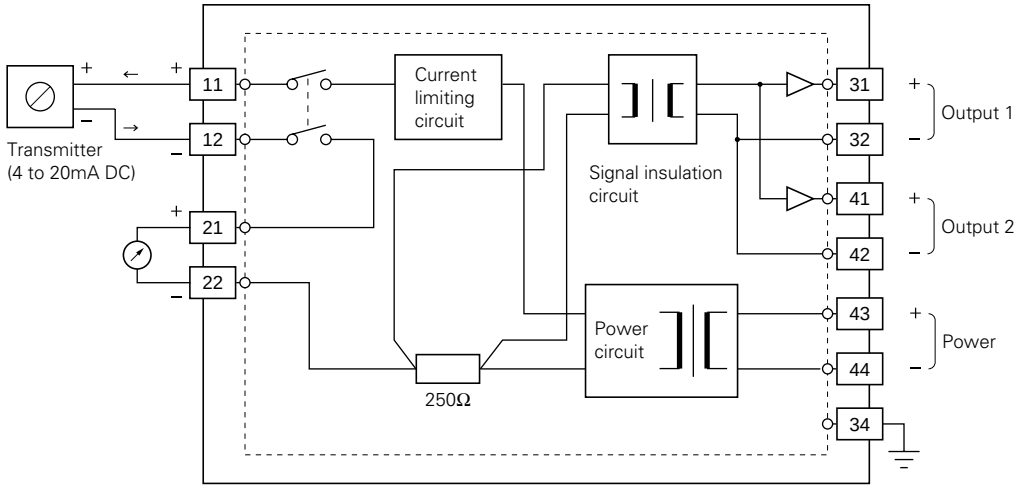

OUTLINE DIAGRAM (Unit: mm)

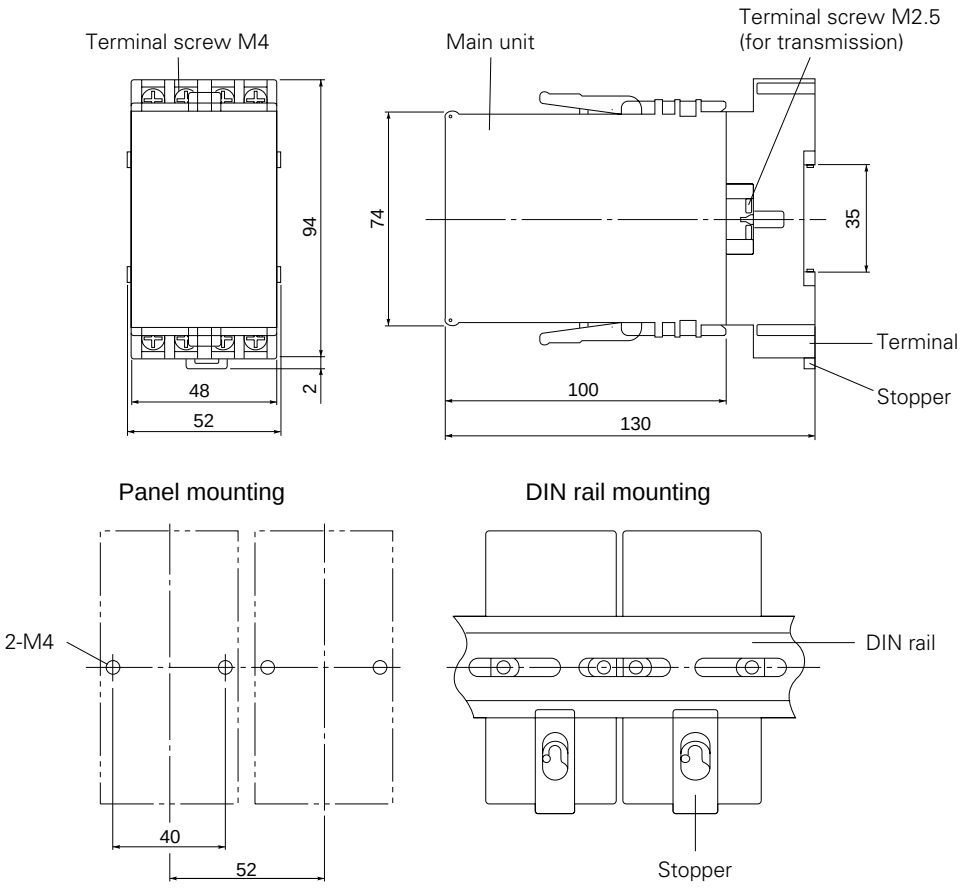

EXTERNAL CONNECTION DIAGRAM

General
(non-insulation type, power insulation type, power I/O insulation type)

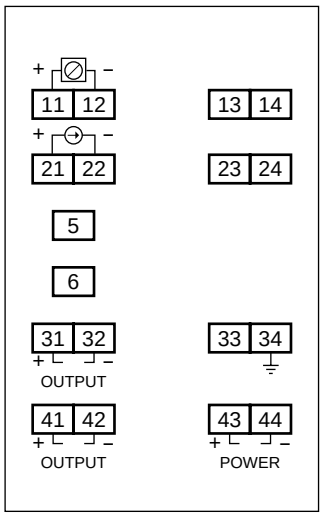

Reception only type

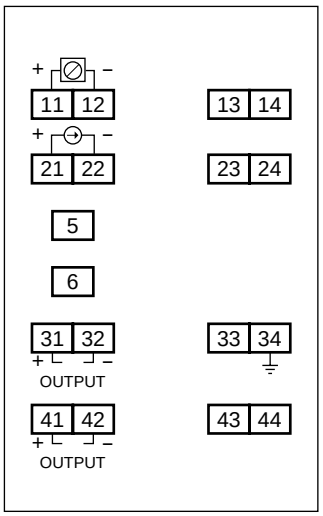

RANGE OF DELIVERY

Main unit and socket

⚠ Caution on Safety

*Before using this product, be sure to read its instruction manual in advance.

Fuji Electric Systems Co., Ltd.

Head Office
Gate City Ohsaki, East Tower, 11-2, Osaki 1-chome,
Shinagawa-ku, Tokyo 141-0032, Japan
http://www.fesys.co.jp/eng

Instrumentation Div.
International Sales Dept.
No.1, Fuji-machi, Hino-city, Tokyo, 191-8502 Japan
Phone: 81-42-585-6201, 6202 Fax: 81-42-585-6187
http://www.fic-net.jp/eng

Information in this catalog is subject to change without notice.

Printed in Japan