WATER LEVEL TRANSMITTER

DATA SHEET FQK

This water level transmitter is used for measuring the level of clean water, sewage water, well, river, etc.
The detector is placed on the bottom of the water, and the water head pressure acting on the pressure receiving diaphragm is detected, converted into a current signal and then transmitted to a receiving instrument via the connector terminal.

FEATURES

1. Accuracy as high as ±0.2 %
   Excellent performance has been realized with a highly evaluated capacitance type silicon sensor and a microprocessor.
2. Powerful arrester built-in
   Both detector and connector terminal are equipped with a lightning arrester to secure reliable lightning protection.
3. Remotely adjustable
   This transmitter is remotely adjustable with a hand-held communicator.



DETECTOR



CONNECTOR TERMINSL

SPECIFICATIONS

<Functional specifications>

Measurement item :
Water level of clean water, sewage water, well, river, etc.
(Note: Avoid a vicinity of chemical injection site.)

Measuring range:
0 to 1.5 ... 13 m
0 to 10 ... 50 m

Output: 4 to 20 mA DC

Power supply: 24 V DC (10.5 to 32 V)

Wiring system: 2-wire system

Allowable load resistance:
0 to 600 Ω (at power supply of 24 V DC)
Note: A load resistance of at least 250 Ω is required for communications with a hand-held communicator.

Remote setting: Zero/span adjustments, range setting and damping setting
(Settable with a hand-held communicator.)

Communication line conditions (when using hand-held communicator):
Line length; Max. 2 km
Load resistance; 250 to 600 Ω
Load capacity; 0.22 μF or less
Load inductance; 3.3 mH or less

Saturation output:
Upper limit: 20.8 mA, lower limit: 3.8 mA

Damping: Time constant variable within 0 to 32 sec
(Settable with a hand-held communicator.)

Zero and span adjustments:
Adjustable from connector terminal or remotely adjustable with hand-held communicator.

Zero point shift: ±35% of maximum measuring range

Span adjustable range:
10 to 100% of maximum measuring range
(Measuring range must not be exceeded.)

Liquid contacting temperature (detector):
0 to 50˚C

Ambient temperature (connector terminal):
-20 to +60˚C

Storage temperature:
-30 to +70˚C

<Performance specifications>

Accuracy rating: ±0.2% of measuring span

Allowable overpressure:
Up to 2 times of maximum measuring range

Temperature effect:
±(0.3 + 0.2 × URL / X) % /30˚C
URL; Upper range limit (13 or 50 m)
X; Actual measuring span

<Physical specifications>

Material (detector):
Pressure receiving diaphragm; SUS 316L
Outer tube; SUS 316
Hollow cable; PVC or PE covering

Enclosure: Detector: IP68
The pressure detector of the type for sewage water is provided with a sludge protector.
Connector terminal: JIS C0920 immersion-proof type

Mass (weight) approx:
Detector; 2 kg
Connector terminal; 3.5 kg (excluding cable)
Cable; 3 kg /10 m

Mounting method:
Detector; Suspended in water or placed at water bottom.
Repeater; Mounted on 2B pipe or wall.

Arrester: Built in both detector and connector terminal.
Lightning resistance
Detector: 10 kA, Repeater: 2500 A (8/20 μs)

<Optional specifications>

Indicator (repeater):
Analog indicator
% scale or actual-value scale

Detector stand: For installing detector at water bottom
SUS 304 (ϕ267, ϕ180, ϕ95 ··· by order)

Chain: SUS 316 (for hoisting the detector)

SCOPE OF DELIVERY

Transmitter (detector + connector terminal, with hollow cable and pipe mounting bracket)
Detector stand and chain when specified at option,

RELATED DEVICE

Hand-held communicator (type FXW. Refer to EDS8-47.)

OPERATING PRINCIPLE OF DETECTOR

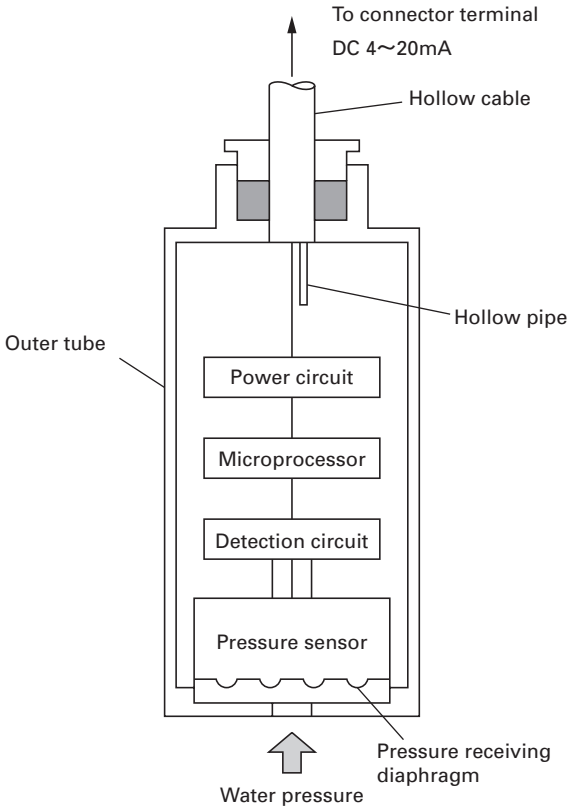

SYSTEM CONFIGURATION (EXAMPLE)

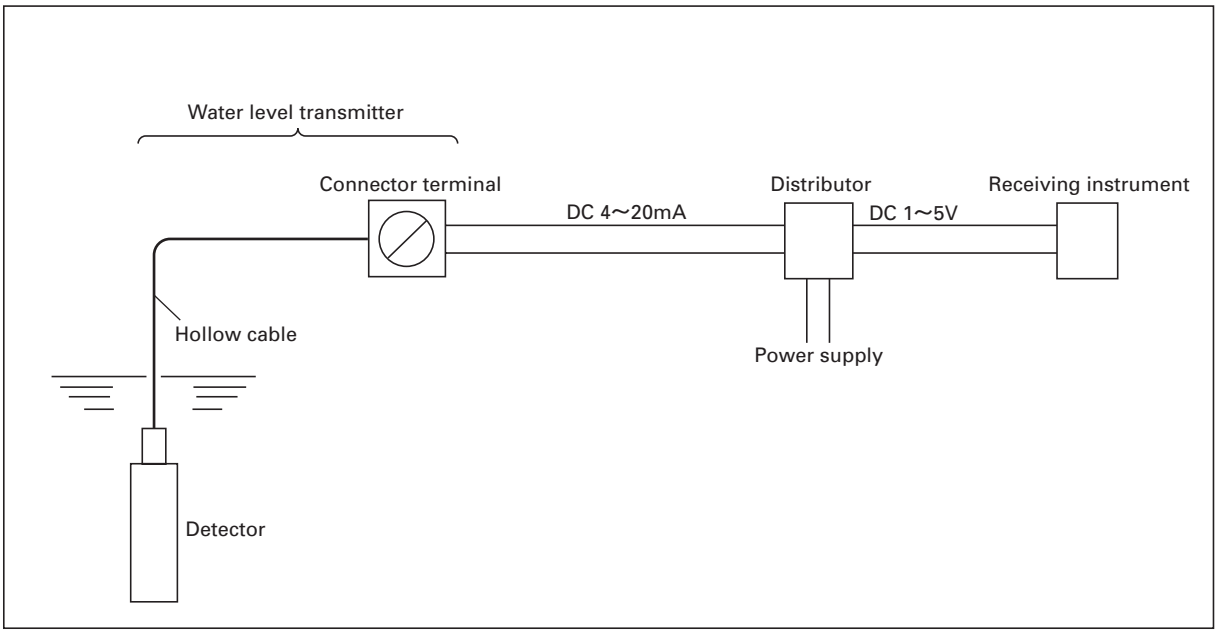

CODE SYMBOLS

1	2	3	4	5	6	7	8		9	10	11	Description
F	Q	K					3	-				
			1									**Measuring range** 0~1.5·····13m
			2									0~10·····50m
				1								**Hollow cable length (m)** 10
				2								20
				3								30
				4								40
				5								50
				6								60
				7								70
				8								80
				9								90
				A								100
					A							**Hollow cable material** PVC (for general application)
					B							PE (for preventing corrosion)
						Y						**Indicator (repeater)** None
						A						Analog indicator (% scale)
						B						Analog indicator (actual-value scale)
									0			**Detector stand** Without
									1			With (ø267)
									2			With (ø180)
									3			With (ø95)
										0		**Application** General
										1		Sewage water (Sludge protection) - - - - Select B for the 6th digit as hollow cable material
											0	**Chain (Detector)** Without
											1	With 10m
											2	With 20m
											3	With 30m
											4	With 40m
											5	With 50m

EXTERNAL CONNECTION DIAGRAM

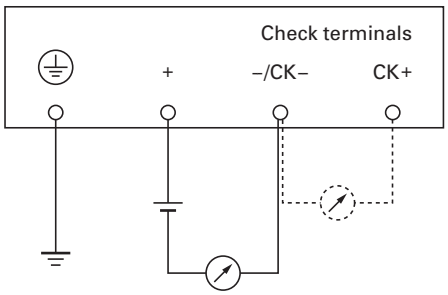

ORDERING INFORMATION

1. Product name
2. Type
3. Measuring range

OUTLINE DIAGRAM (Unit: mm)

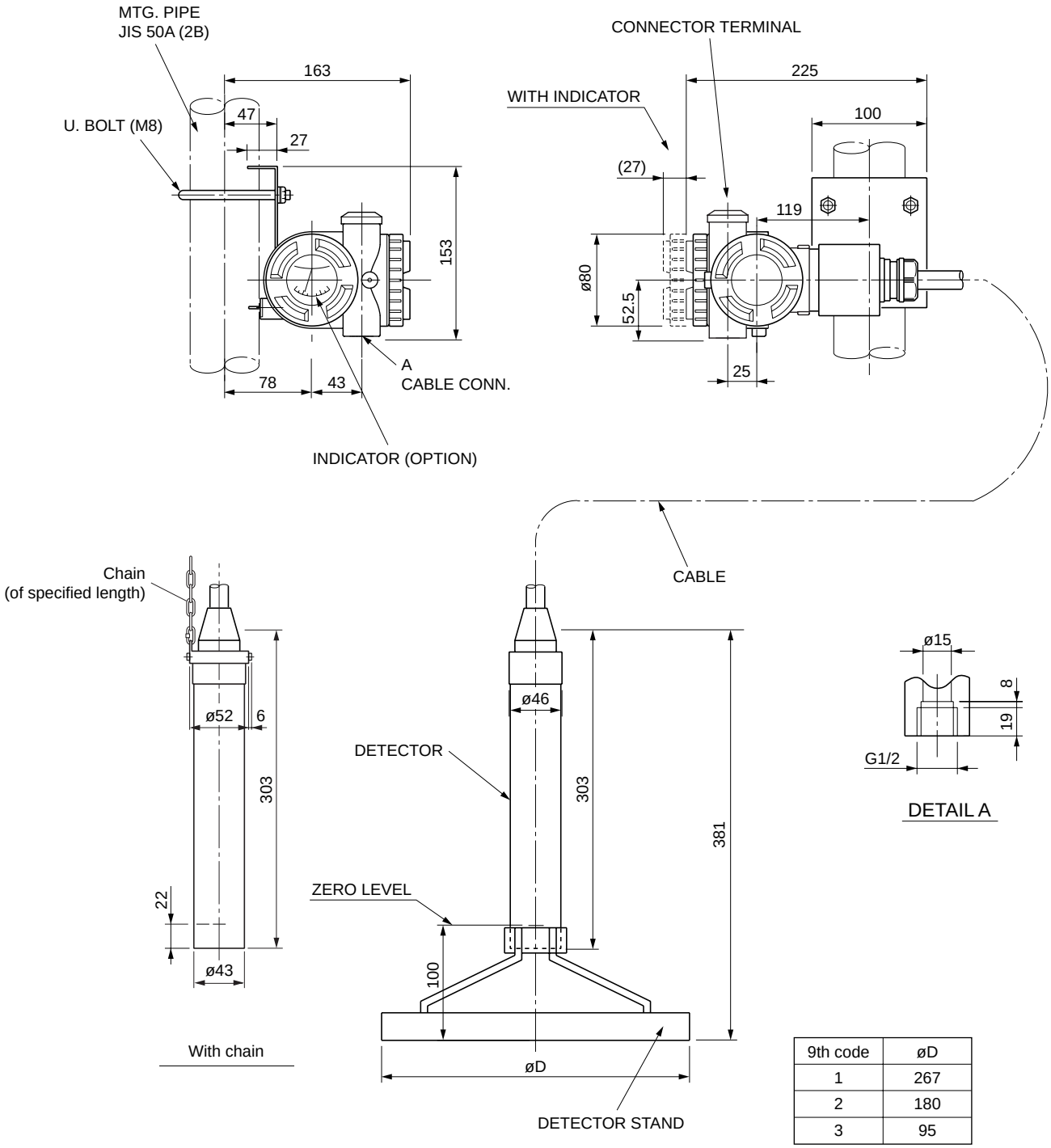

9th code	øD
1	267
2	180
3	95

⚠ Caution on Safety

*Before using this product, be sure to read its instruction manual in advance.

Fuji Electric Co., Ltd.

International Sales Div
Sales Group
Gate City Ohsaki, East Tower, 11-2, Osaki 1-chome,
Shinagawa-ku, Tokyo 141-0032, Japan
http://www.fujielectric.com
Phone: 81-3-5435-7280, 7281 Fax: 81-3-5435-7425
http://www.fjielectric.com/products/instruments/

Information in this catalog is subject to change without notice.

Printed in Japan