ELPIDA

DATA SHEET

128M bits DDR SDRAM

EDD1216AATA-5 (8M words × 16 bits, DDR400)

Description

The EDD1216AATA is a 128M bits Double Data Rate (DDR) SDRAM organized as 2,097,154 words × 16 bits × 4 banks. Read and write operations are performed at the cross points of the CK and the /CK. This high-speed data transfer is realized by the 2 bits prefetch-pipelined architecture. Data strobe (DQS) both for read and write are available for high speed and reliable data bus design. By setting extended mode register, the on-chip Delay Locked Loop (DLL) can be set enable or disable. It is packaged in 66-pin plastic TSOP (II).

Features

- Power supply: VDD ,VDDQ = 2.6V ± 0.1V
- Data rate: 400Mbps (max.)
- Double Data Rate architecture; two data transfers per clock cycle
- Bi-directional, data strobe (DQS) is transmitted /received with data, to be used in capturing data at the receiver
- Data inputs, outputs, and DM are synchronized with DQS
- 4 internal banks for concurrent operation
- DQS is edge aligned with data for READs; center aligned with data for WRITEs
- Differential clock inputs (CK and /CK)
- DLL aligns DQ and DQS transitions with CK transitions
- Commands entered on each positive CK edge; data and data mask referenced to both edges of DQS
- Data mask (DM) for write data
- Auto precharge option for each burst access
- SSTL_2 compatible I/O
- Programmable burst length (BL): 2, 4, 8
- Programmable /CAS latency (CL): 3
- Programmable output driver strength: normal/weak
- Refresh cycles: 4096 refresh cycles/64ms
  - 15.6μs maximum average periodic refresh interval
- 2 variations of refresh
  - Auto refresh
  - Self refresh
- TSOP (II) package with lead free solder (Sn-Bi)
  - RoHS compliant

Pin Configurations

/xxx indicates active low signal.

66-pin Plastic TSOP(II)

VDD	1	66	VSS
DQ0	2	65	DQ15
VDDQ	3	64	VSSQ
DQ1	4	63	DQ14
DQ2	5	62	DQ13
VSSQ	6	61	VDDQ
DQ3	7	60	DQ12
DQ4	8	59	DQ11
VDDQ	9	58	VSSQ
DQ5	10	57	DQ10
DQ6	11	56	DQ9
VSSQ	12	55	VDDQ
DQ7	13	54	DQ8
NC	14	53	NC
VDDQ	15	52	VSSQ
LDQS	16	51	UDQS
NC	17	50	NC
VDD	18	49	VREF
NC	19	48	VSS
LDM	20	47	UDM
/WE	21	46	/CK
/CAS	22	45	CK
/RAS	23	44	CKE
/CS	24	43	NC
NC	25	42	NC
BA0	26	41	A11
BA1	27	40	A9
A10(AP)	28	39	A8
A0	29	38	A7
A1	30	37	A6
A2	31	36	A5
A3	32	35	A4
VDD	33	34	VSS

(Top view)

A0 to A11	Address input
BA0, BA1	Bank select address
DQ0 to DQ15	Data-input/output
UDQS/LDQS	Input and output data strobe
/CS	Chip select
/RAS	Row address strobe command
/CAS	Column address strobe command
/WE	Write enable
UDM/LDM	Input mask
CK	Clock input
/CK	Differential clock input
CKE	Clock enable
VREF	Input reference voltage
VDD	Power for internal circuit
VSS	Ground for internal circuit
VDDQ	Power for DQ circuit
VSSQ	Ground for DQ circuit
NC	No connection

Document No. E0443E40 (Ver. 4.0)
Date Published October 2005 (K) Japan
Printed in Japan
URL: http://www.elpida.com

©Elpida Memory, Inc. 2003-2005

Ordering Information

Part number	Mask version	Organization (words × bits)	Internal banks	Data rate Mbps (max.)	JEDEC speed bin (CL-tRCD-tRP)	Package
EDD1216AATA-5B-E EDD1216AATA-5C-E	A	8M × 16	4	400	DDR400B (3-3-3) DDR400C (3-4-4)	66-pin Plastic TSOP (II)

Part Number

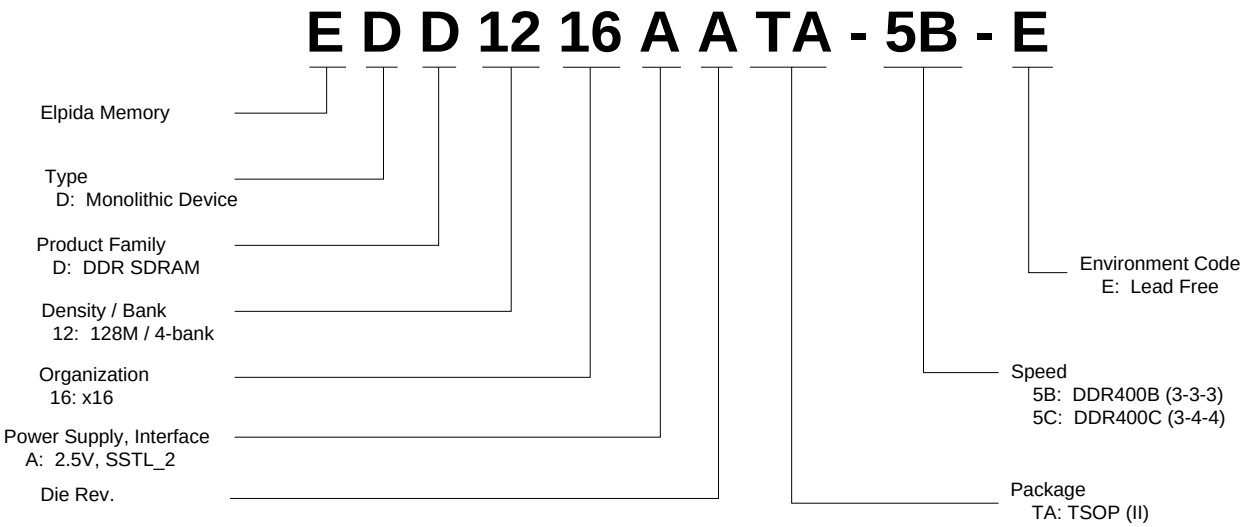

CONTENTS

Description....1
Features....1
Pin Configurations....1
Ordering Information....2
Part Number....2
Electrical Specifications....4
Block Diagram....10
Pin Function....11
Command Operation....13
Simplified State Diagram....20
Operation of the DDR SDRAM....21
Timing Waveforms....39
Package Drawing....45
Recommended Soldering Conditions....46

Electrical Specifications

- All voltages are referenced to VSS (GND).
- After power up, wait more than 200 µs and then, execute power on sequence and CBR (Auto) refresh before proper device operation is achieved.

Absolute Maximum Ratings

Parameter	Symbol	Rating	Unit	Note
Voltage on any pin relative to VSS	VT	–1.0 to +3.6	V	
Supply voltage relative to VSS	VDD	–1.0 to +3.6	V	
Short circuit output current	IOS	50	mA	
Power dissipation	PD	1.0	W	
Operating ambient temperature	TA	0 to +70	°C	
Storage temperature	Tstg	–55 to +125	°C	

Caution

Exposing the device to stress above those listed in Absolute Maximum Ratings could cause permanent damage. The device is not meant to be operated under conditions outside the limits described in the operational section of this specification. Exposure to Absolute Maximum Rating conditions for extended periods may affect device reliability.

Recommended Operating Conditions (TA = 0°C to +70°C)

Parameter	Symbol	min.	typ.	max.	Unit	Notes
Supply voltage	VDD, VDDQ	2.5	2.6	2.7	V	1
	VSS, VSSQ	0	0	0	V	
Input reference voltage	VREF	0.49 × VDDQ	0.50 × VDDQ	0.51 × VDDQ	V	
Termination voltage	VTT	VREF – 0.04	VREF	VREF + 0.04	V	
Input high voltage	VIH (DC)	VREF + 0.15	—	VDDQ + 0.3	V	2
Input low voltage	VIL (DC)	–0.3	—	VREF – 0.15	V	3
Input voltage level, CK and /CK inputs	VIN (DC)	–0.3	—	VDDQ + 0.3	V	4
Input differential cross point voltage, CK and /CK inputs	VIX (DC)	0.5 × VDDQ – 0.2V	0.5 × VDDQ	0.5 × VDDQ + 0.2V	V	
Input differential voltage, CK and /CK inputs	VID (DC)	0.36	—	VDDQ + 0.6	V	5, 6

Notes: 1. VDDQ must be lower than or equal to VDD.
2. VIH is allowed to exceed VDD up to 3.6V for the period shorter than or equal to 5ns.
3. VIL is allowed to outreach below VSS down to –1.0V for the period shorter than or equal to 5ns.
4. VIN (DC) specifies the allowable DC execution of each differential input.
5. VID (DC) specifies the input differential voltage required for switching.
6. VIH (CK) min assumed over VREF + 0.18V, VIL (CK) max assumed under VREF – 0.18V if measurement.

DC Characteristics 1 (TA = 0°C to +70°C, VDD, VDDQ = 2.6V ± 0.1V, VSS, VSSQ = 0V)

Parameter	Symbol	Grade	max.	Unit	Test condition	Notes
Operating current (ACT-PRE)	IDD0		110	mA	CKE ≥ VIH, tRC = tRC (min.)	1, 2, 9
Operating current (ACT-READ-PRE)	IDD1		140	mA	CKE ≥ VIH, BL = 4, CL = 3, tRC = tRC (min.)	1, 2, 5
Idle power down standby current	IDD2P		3	mA	CKE ≤ VIL	4
Floating idle standby current	IDD2F		35	mA	CKE ≥ VIH, /CS ≥ VIH DQ, DQS, DM = VREF	4, 5
Quiet idle standby current	IDD2Q		30	mA	CKE ≥ VIH, /CS ≥ VIH DQ, DQS, DM = VREF	4, 10
Active power down standby current	IDD3P		20	mA	CKE ≤ VIL	3
Active standby current	IDD3N		55	mA	CKE ≥ VIH, /CS ≥ VIH tRAS = tRAS (max.)	3, 5, 6
Operating current (Burst read operation)	IDD4R		205	mA	CKE ≥ VIH, BL = 2, CL = 3	1, 2, 5, 6
Operating current (Burst write operation)	IDD4W		205	mA	CKE ≥ VIH, BL = 2, CL = 3	1, 2, 5, 6
Auto Refresh current	IDD5		200	mA	tRFC = tRFC (min.), Input ≤ VIL or ≥ VIH	
Self refresh current	IDD6		3	mA	Input ≥ VDD – 0.2 V Input ≤ 0.2 V	
Operating current (4 banks interleaving)	IDD7A		350	mA	BL = 4	1, 5, 6, 7

Notes: 1. These IDD data are measured under condition that DQ pins are not connected.
2. One bank operation.
3. One bank active.
4. All banks idle.
5. Command/Address transition once per one clock cycle.
6. DQ, DM and DQS transition twice per one clock cycle.
7. 4 banks active. Only one bank is running at tRC = tRC (min.)
8. The IDD data on this table are measured with regard to tCK = tCK (min.) in general.
9. Command/Address transition once every two clock cycle.
10. Command/Address stable at ≥ VIH or ≤ VIL.

DC Characteristics 2 (TA = 0°C to +70°C, VDD, VDDQ = 2.6V ± 0.1V, VSS, VSSQ = 0V)

Parameter	Symbol	min.	max.	Unit	Test condition	Note
Input leakage current	ILI	–2	2	µA	VDD ≥ VIN ≥ VSS	
Output leakage current	ILO	–5	5	µA	VDDQ ≥ VOUT ≥ VSS	
Output high current	IOH	–15.2	—	mA	VOUT = 1.95V	
Output low current	IOL	15.2	—	mA	VOUT = 0.35V	

Pin Capacitance (TA = +25°C, VDD, VDDQ = 2.6V ± 0.1V)

Parameter	Symbol	Pins	min.	typ.	max.	Unit	Notes
Input capacitance	CI1	CK, /CK	2.0	—	3.0	pF	1
	CI2	All other input pins	2.0	—	3.0	pF	1
Delta input capacitance	Cdi1	CK, /CK	—	—	0.25	pF	1
	Cdi2	All other input-only pins	—	—	0.5	pF	1
Data input/output capacitance	CI/O	DQ, DM, DQS	3.8	—	4.8	pF	1, 2,
Delta input/output capacitance	Cdio	DQ, DM, DQS	—	—	0.6	pF	1

Notes: 1. These parameters are measured on conditions: f = 100MHz, VOUT = VDDQ/2, ΔVOUT = 0.2V, TA = +25°C.

2. DOUT circuits are disabled.

AC Characteristics (TA = 0°C to +70°C, VDD, VDDQ = 2.6V ± 0.1V, VSS, VSSQ = 0V)

		-5B		-5C			
Parameter	Symbol	min.	max.	min.	max.	Unit	Notes
Clock cycle time	tCK	5	8	5	8	ns	10
CK high-level width	tCH	0.45	0.55	0.45	0.55	tCK	
CK low-level width	tCL	0.45	0.55	0.45	0.55	tCK	
CK half period	tHP	min (tCH, tCL)	—	min (tCH, tCL)	—	tCK	
DQ output access time from CK, /CK	tAC	–0.7	0.7	–0.7	0.7	ns	2, 11
DQS output access time from CK, /CK	tDQSCK	–0.55	0.55	–0.55	0.55	ns	2, 11
DQS to DQ skew	tDQSQ	—	0.4	—	0.4	ns	3
DQ/DQS output hold time from DQS	tQH	tHP – tQHS	—	tHP – tQHS	—	ns	
Data hold skew factor	tQHS	—	0.5	—	0.5	ns	
Data-out high-impedance time from CK, /CK	tHZ	—	0.7	—	0.7	ns	5, 11
Data-out low-impedance time from CK, /CK	tLZ	–0.7	0.7	–0.7	0.7	ns	6, 11
Read preamble	tRPRE	0.9	1.1	0.9	1.1	tCK	
Read postamble	tRPST	0.4	0.6	0.4	0.6	tCK	
DQ and DM input setup time	tDS	0.4	—	0.4	—	ns	8
DQ and DM input hold time	tDH	0.4	—	0.4	—	ns	8
DQ and DM input pulse width	tDIPW	1.75	—	1.75	—	ns	7
Write preamble setup time	tWPRES	0	—	0	—	ns	
Write preamble	tWPRE	0.25	—	0.25	—	tCK	
Write postamble	tWPST	0.4	0.6	0.4	0.6	tCK	9
Write command to first DQS latching transition	tDQSS	0.72	1.28	0.72	1.28	tCK	
DQS falling edge to CK setup time	tDSS	0.2	—	0.2	—	tCK	
DQS falling edge hold time from CK	tDSH	0.2	—	0.2	—	tCK	
DQS input high pulse width	tDQSH	0.35	—	0.35	—	tCK	
DQS input low pulse width	tDQSL	0.35	—	0.35	—	tCK	
Address and control input setup time	tIS	0.6	—	0.6	—	ns	8
Address and control input hold time	tIH	0.6	—	0.6	—	ns	8
Address and control input pulse width	tIPW	2.2	—	2.2	—	ns	7

		-5B		-5C			
Parameter	Symbol	min.	max.	min.	max.	Unit	Notes
Mode register set command cycle time	tMRD	2	—	2	—	tCK	
Active to Precharge command period	tRAS	40	120000	40	120000	ns	
Active to Active/Auto refresh command period	tRC	55	—	60	—	ns	
Auto refresh to Active/Auto refresh command period	tRFC	70	—	70	—	ns	
Active to Read/Write delay	tRCD	15	—	18	—	ns	
Precharge to active command period	tRP	15	—	18	—	ns	
Active to Autoprecharge delay	tRAP	tRCD min.	—	tRCD min.	—	ns	
Active to active command period	tRRD	10	—	10	—	ns	
Write recovery time	tWR	15	—	15	—	ns	
Auto precharge write recovery and precharge time	tDAL	(tWR/tCK)+ (tRP/tCK)	—	(tWR/tCK)+ (tRP/tCK)	—	tCK	13
Internal write to Read command delay	tWTR	2	—	2	—	tCK	
Average periodic refresh interval	tREF	—	15.6	—	15.6	µs	

Notes: 1. On all AC measurements, we assume the test conditions shown in the next page. For timing parameter definitions, see 'Timing Waveforms' section.

2. This parameter defines the signal transition delay from the cross point of CK and /CK. The signal transition is defined to occur when the signal level crossing VTT.
3. The timing reference level is VTT.
4. Output valid window is defined to be the period between two successive transition of data out or DQS (read) signals. The signal transition is defined to occur when the signal level crossing VTT.
5. tHZ is defined as DOUT transition delay from Low-Z to High-Z at the end of read burst operation. The timing reference is cross point of CK and /CK. This parameter is not referred to a specific DOUT voltage level, but specify when the device output stops driving.
6. tLZ is defined as DOUT transition delay from High-Z to Low-Z at the beginning of read operation. This parameter is not referred to a specific DOUT voltage level, but specify when the device output begins driving.
7. Input valid windows is defined to be the period between two successive transition of data input or DQS (write) signals. The signal transition is defined to occur when the signal level crossing VREF.
8. The timing reference level is VREF.
9. The transition from Low-Z to High-Z is defined to occur when the device output stops driving. A specific reference voltage to judge this transition is not given.
10. tCK (max.) is determined by the lock range of the DLL. Beyond this lock range, the DLL operation is not assured.
11. tCK = tCK (min) when these parameters are measured. Otherwise, absolute minimum values of these values are 10% of tCK.
12. VDD is assumed to be 2.6V ± 0.1V. VDD power supply variation per cycle expected to be less than 0.4V/400 cycle.
13. tDAL = (tWR/tCK)+(tRP/tCK)

    For each of the terms above, if not already an integer, round to the next highest integer.

    Example: For –5C Speed at CL = 3, tCK = 5ns, tWR = 15ns and tRP= 18ns,

    tDAL = (15ns/5ns) + (18ns/5ns) = (3) + (4)

    tDAL = 7 clocks

Test Conditions

Parameter	Symbol	Value	Unit
Input reference voltage	VREF	VDDQ/2	V
Termination voltage	VTT	VREF	V
Input high voltage	VIH (AC)	VREF + 0.31	V
Input low voltage	VIL (AC)	VREF – 0.31	V
Input differential voltage, CK and /CK inputs	VID (AC)	0.62	V
Input differential cross point voltage, CK and /CK inputs	VIX (AC)	VREF	V
Input signal slew rate	SLEW	1	V/ns

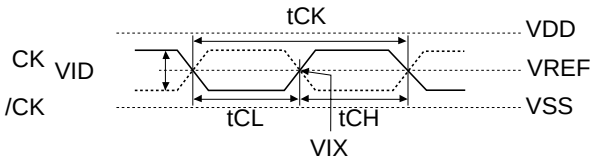

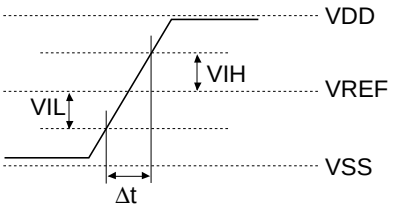

SLEW = (VIH (AC) – VIL (AC))/Δt

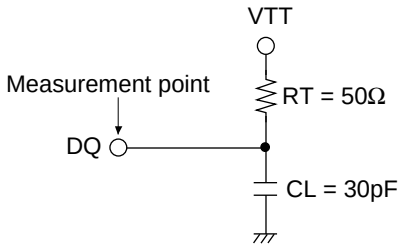

Input Waveforms and Output Load

Timing Parameter Measured in Clock Cycle

		Number of clock cycle		
tCK		5ns		
Parameter	Symbol	min.	max.	Unit
Write to pre-charge command delay (same bank)	tWPD	4 + BL/2	—	tCK
Read to pre-charge command delay (same bank)	tRPD	BL/2	—	tCK
Write to read command delay (to input all data)	tWRD	2 + BL/2	—	tCK
Burst stop command to write command delay	tBSTW	3	—	tCK
Burst stop command to DQ High-Z	tBSTZ	3	3	tCK
Read command to write command delay (to output all data)	tRWD	3 + BL/2	—	tCK
Pre-charge command to High-Z	tHZP	3	3	tCK
Write command to data in latency	tWCD	1	1	tCK
Write recovery	tWR	3	—	tCK
DM to data in latency	tDMD	0	0	tCK
Mode register set command cycle time	tMRD	2	—	tCK
Self refresh exit to non-read command	tSNR	15	—	tCK
Self refresh exit to read command	tSRD	200	—	tCK
Power down entry	tPDEN	1	1	tCK
Power down exit to command input	tPDEX	1	—	tCK

Block Diagram

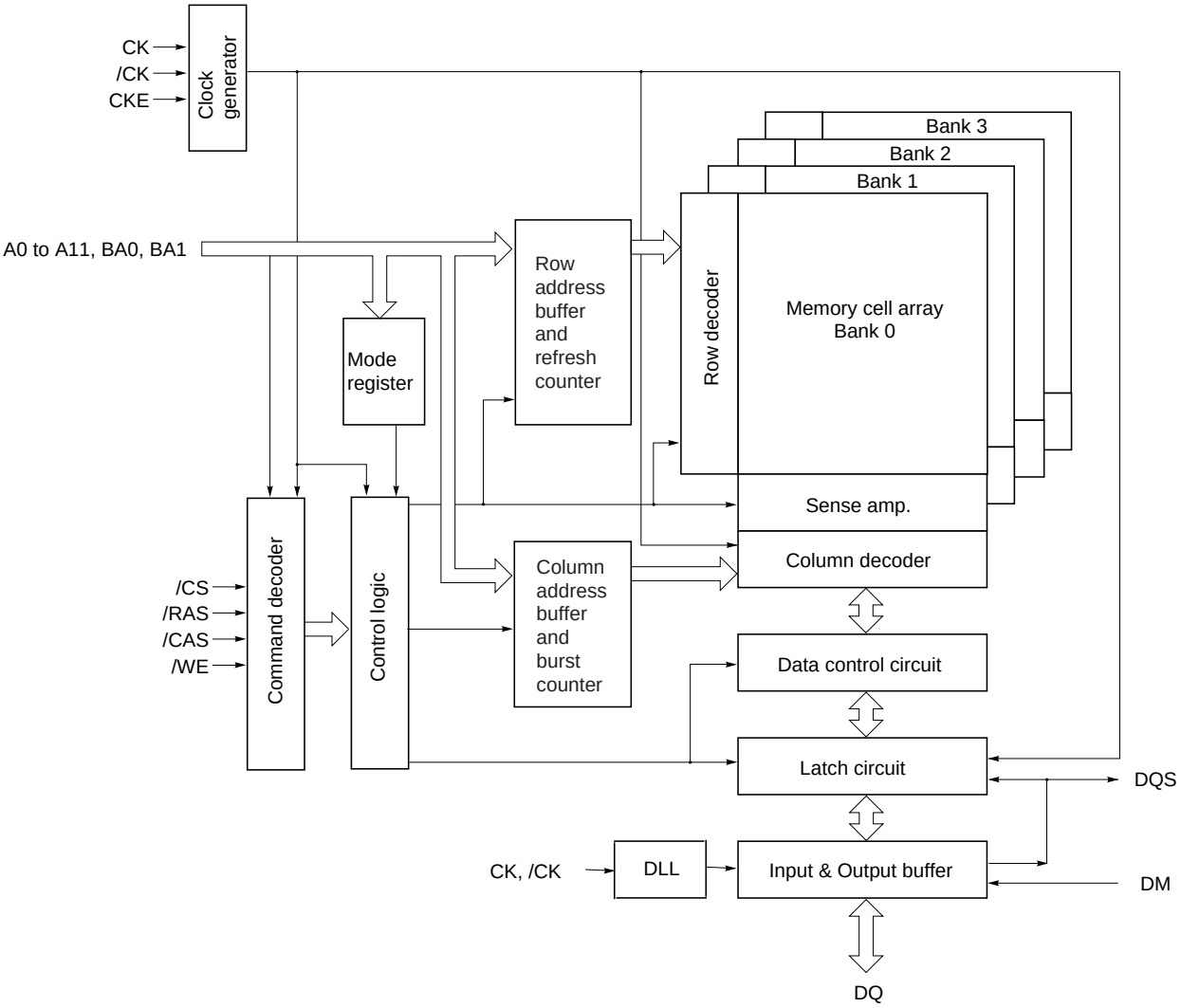

Pin Function

CK, /CK (input pins)

The CK and the /CK are the master clock inputs. All inputs except DM, DQS and DQs are referred to the cross point of the CK rising edge and the /CK falling edge. When a read operation, DQS and DQs are referred to the cross point of the CK and the /CK. When a write operation, DQS and DQs are referred to the cross point of the DQS and the VREF level. DQS for write operation is referred to the cross point of the CK and the /CK. CK is the master clock input to this pin. The other input signals are referred at CK rising edge.

/CS (input pin)

When /CS is Low, commands and data can be input. When /CS is High, all inputs are ignored. However, internal operations (bank active, burst operations, etc.) are held.

/RAS, /CAS, and /WE (input pins)

These pins define operating commands (read, write, etc.) depending on the combinations of their voltage levels. See "Command operation".

A0 toA11 (input pins)

Row address (AX0 to AX11) is determined by the A0 to the A11 level at the cross point of the CK rising edge and the /CK falling edge in a bank active command cycle. Column address (See “Address Pins Table”) is loaded via the A0 to the A8 at the cross point of the CK rising edge and the /CK falling edge in a read or a write command cycle. This column address becomes the starting address of a burst operation.

[Address Pins Table]

	Address (A0 to A11)	
Part number	Row address	Column address
EDD1216AATA	AX0 to AX11	AY0 to AY8

A10 (AP) (input pin)

A10 defines the precharge mode when a precharge command, a read command or a write command is issued. If A10 = High when a precharge command is issued, all banks are precharged. If A10 = Low when a precharge command is issued, only the bank that is selected by BA1/BA0 is precharged. If A10 = High when read or write command, auto-precharge function is enabled. While A10 = Low, auto-precharge function is disabled.

BA0 and BA1 (input pins)

BA0, BA1 are bank select signals (BA). The memory array is divided into bank 0, bank 1, bank 2 and bank 3. (See Bank Select Signal Table)

[Bank Select Signal Table]

	BA0	BA1
Bank 0	L	L
Bank 1	H	L
Bank 2	L	H
Bank 3	H	H

Remark: H: VIH. L: VIL.

CKE (input pin)

This pin determines whether or not the next CK is valid. If CKE is High, the next CK rising edge is valid. If CKE is Low. CKE controls power down and self-refresh. The power down and the self-refresh commands are entered when the CKE is driven Low and exited when it resumes to High. CKE must be maintained high throughout read or write access.

The CKE level must be kept for 1 CK cycle at least, that is, if CKE changes at the cross point of the CK rising edge and the /CK falling edge with proper setup time tIS, by the next CK rising edge CKE level must be kept with proper hold time tIH.

UDM, LDM (input pin)

DMs are the reference signals of the data input mask function. DMs are sampled at the cross point of DQS and V_{REF}. DMs provide the byte mask function. In × 16 products, LDM controls the lower byte (DQ0 to DQ7) and UDM controls the upper byte (DQ8 to DQ15) of write data. When DM = High, the data input at the same timing are masked while the internal burst counter will be count up.

DQ0 toDQ15 (input/output pins)

Data is input to and output from these pins.

UDQS, LDQS (input and output pin)

DQS provide the read data strobes (as output) and the write data strobes (as input). In ×16 products, LDQS is the lower byte (DQ0 to DQ7) data strobe signal, UDQS is the upper byte (DQ8 to DQ15) data strobe signal.

VDD, VSS, VDDQ, VSSQ (Power supply)

VDD and VSS are power supply pins for internal circuits. VDDQ and VSSQ are power supply pins for the output buffers.

Command Operation

Command Truth Table

DDR SDRAM recognize the following commands specified by the /CS, /RAS, /CAS, /WE and address pins. All other combinations than those in the table below are illegal.

		CKE									
Command	Symbol	n – 1	n	/CS	/RAS	/CAS	/WE	BA1	BA0	AP	Address
Ignore command	DESL	H	H	H	×	×	×	×	×	×	×
No operation	NOP	H	H	L	H	H	H	×	×	×	×
Burst stop in read command	BST	H	H	L	H	H	L	×	×	×	×
Column address and read command	READ	H	H	L	H	L	H	V	V	L	V
Read with auto-precharge	READA	H	H	L	H	L	H	V	V	H	V
Column address and write command	WRIT	H	H	L	H	L	L	V	V	L	V
Write with auto-precharge	WRITA	H	H	L	H	L	L	V	V	H	V
Row address strobe and bank active	ACT	H	H	L	L	H	H	V	V	V	V
Precharge select bank	PRE	H	H	L	L	H	L	V	V	L	×
Precharge all bank	PALL	H	H	L	L	H	L	×	×	H	×
Refresh	REF	H	H	L	L	L	H	×	×	×	×
	SELF	H	L	L	L	L	H	×	×	×	×
Mode register set	MRS	H	H	L	L	L	L	L	L	L	V
	EMRS	H	H	L	L	L	L	L	H	L	V

Remark: H: VIH. L: VIL. ×: VIH or VIL V: Valid address input

Note: The CKE level must be kept for 1 CK cycle at least.

Ignore command [DESL]

When /CS is High at the cross point of the CK rising edge and the VREF level, every input are neglected and internal status is held.

No operation [NOP]

As long as this command is input at the cross point of the CK rising edge and the VREF level, address and data input are neglected and internal status is held.

Burst stop in read operation [BST]

This command stops a burst read operation, which is not applicable for a burst write operation.

Column address strobe and read command [READ]

This command starts a read operation. The start address of the burst read is determined by the column address (See “Address Pins Table” in Pin Function) and the bank select address. After the completion of the read operation, the output buffer becomes High-Z.

Read with auto-precharge [READA]

This command starts a read operation. After completion of the read operation, precharge is automatically executed.

Column address strobe and write command [WRIT]

This command starts a write operation. The start address of the burst write is determined by the column address (See “Address Pins Table” in Pin Function) and the bank select address.

Write with auto-precharge [WRITA]

This command starts a write operation. After completion of the write operation, precharge is automatically executed.

Row address strobe and bank activate [ACT]

This command activates the bank that is selected by BA0, BA1 and determines the row address (AX0 to AX11). (See Bank Select Signal Table)

Precharge selected bank [PRE]

This command starts precharge operation for the bank selected by BA0, BA1. (See Bank Select Signal Table)

[Bank Select Signal Table]

	BA0	BA1
Bank 0	L	L
Bank 1	H	L
Bank 2	L	H
Bank 3	H	H

Remark: H: VIH. L: VIL.

Precharge all banks [PALL]

This command starts a precharge operation for all banks.

Refresh [REF/SELF]

This command starts a refresh operation. There are two types of refresh operation, one is auto-refresh, and another is self-refresh. For details, refer to the CKE truth table section.

Mode register set/Extended mode register set [MRS/EMRS]

The DDR SDRAM has the two mode registers, the mode register and the extended mode register, to defines how it works. The both mode registers are set through the address pins (the A0 to the A11, BA0 to BA1) in the mode register set cycle. For details, refer to "Mode register and extended mode register set".

CKE Truth Table

		CKE							
Current state	Command	n – 1	n	/CS	/RAS	/CAS	/WE	Address	Notes
Idle	Auto-refresh command (REF)	H	H	L	L	L	H	×	2
Idle	Self-refresh entry (SELF)	H	L	L	L	L	H	×	2
Idle	Power down entry (PDEN)	H	L	L	H	H	H	×	
		H	L	H	×	×	×	×	
Self refresh	Self refresh exit (SELFX)	L	H	L	H	H	H	×	
		L	H	H	×	×	×	×	
Power down	Power down exit (PDEX)	L	H	L	H	H	H	×	
		L	H	H	×	×	×	×	

Remark: H: VIH. L: VIL. ×: VIH or VIL.

Notes: 1. All the banks must be in IDLE before executing this command.

2. The CKE level must be kept for 1 CK cycle at least.

Function Truth Table

The following tables show the operations that are performed when each command is issued in each state of the DDR SDRAM.

Current state	/CS	/RAS	/CAS	/WE	Address	Command	Operation	Next state
Precharging*[1]	H	×	×	×	×	DESL	NOP	Idle
	L	H	H	H	×	NOP	NOP	Idle
	L	H	H	L	×	BST	ILLEGAL*[11]	—
	L	H	L	H	BA, CA, A10	READ/READA	ILLEGAL*[11]	—
	L	H	L	L	BA, CA, A10	WRIT/WRITA	ILLEGAL*[11]	—
	L	L	H	H	BA, RA	ACT	ILLEGAL*[11]	—
	L	L	H	L	BA, A10	PRE, PALL	NOP	Idle
	L	L	L	×	×		ILLEGAL	—
Idle*[2]	H	×	×	×	×	DESL	NOP	Idle
	L	H	H	H	×	NOP	NOP	Idle
	L	H	H	L	×	BST	ILLEGAL*[11]	—
	L	H	L	H	BA, CA, A10	READ/READA	ILLEGAL*[11]	—
	L	H	L	L	BA, CA, A10	WRIT/WRITA	ILLEGAL*[11]	—
	L	L	H	H	BA, RA	ACT	Activating	Active
	L	L	H	L	BA, A10	PRE, PALL	NOP	Idle
	L	L	L	H	×	REF, SELF	Refresh/ Self refresh*[12]	Idle/ Self refresh
	L	L	L	L	MODE	MRS	Mode register set*[12]	Idle
Refresh (auto-refresh)*[3]	H	×	×	×	×	DESL	NOP	Idle
	L	H	H	H	×	NOP	NOP	Idle
	L	H	H	L	×	BST	ILLEGAL	—
	L	H	L	×	×		ILLEGAL	—
	L	L	×	×	×		ILLEGAL	—
Activating*[4]	H	×	×	×	×	DESL	NOP	Active
	L	H	H	H	×	NOP	NOP	Active
	L	H	H	L	×	BST	ILLEGAL*[11]	—
	L	H	L	H	BA, CA, A10	READ/READA	ILLEGAL*[11]	—
	L	H	L	L	BA, CA, A10	WRIT/WRITA	ILLEGAL*[11]	—
	L	L	H	H	BA, RA	ACT	ILLEGAL*[11]	—
	L	L	H	L	BA, A10	PRE, PALL	ILLEGAL*[11]	—
	L	L	L	×	×		ILLEGAL	—
Active*[5]	H	×	×	×	×	DESL	NOP	Active
	L	H	H	H	×	NOP	NOP	Active
	L	H	H	L	×	BST	ILLEGAL	Active
	L	H	L	H	BA, CA, A10	READ/READA	Starting read operation	Read/READA
	L	H	L	L	BA, CA, A10	WRIT/WRITA	Starting write operation	Write recovering/ precharging
	L	L	H	H	BA, RA	ACT	ILLEGAL*[11]	—
	L	L	H	L	BA, A10	PRE, PALL	Pre-charge	Idle
	L	L	L	×	×		ILLEGAL	—

Current state	/CS	/RAS	/CAS	/WE	Address	Command	Operation	Next state
Read*[6]	H	×	×	×	×	DESL	NOP	Active
	L	H	H	H	×	NOP	NOP	Active
	L	H	H	L	×	BST	BST	Active
	L	H	L	H	BA, CA, A10	READ/READA	Interrupting burst read operation to start new read	Active
	L	H	L	L	BA, CA, A10	WRIT/WRITA	ILLEGAL*[13]	—
	L	L	H	H	BA, RA	ACT	ILLEGAL*[11]	—
	L	L	H	L	BA, A10	PRE, PALL	Interrupting burst read operation to start pre-charge	Precharging
	L	L	L	×	×		ILLEGAL	—
Read with auto-pre-charge*[7]	H	×	×	×	×	DESL	NOP	Precharging
	L	H	H	H	×	NOP	NOP	Precharging
	L	H	H	L	×	BST	ILLEGAL	—
	L	H	L	H	BA, CA, A10	READ/READA	ILLEGAL*[14]	—
	L	H	L	L	BA, CA, A10	WRIT/WRITA	ILLEGAL*[14]	—
	L	L	H	H	BA, RA	ACT	ILLEGAL*[11, 14]	—
	L	L	H	L	BA, A10	PRE, PALL	ILLEGAL*[11, 14]	—
	L	L	L	×	×		ILLEGAL	—
Write*[8]	H	×	×	×	×	DESL	NOP	Write recovering
	L	H	H	H	×	NOP	NOP	Write recovering
	L	H	H	L	×	BST	ILLEGAL	—
	L	H	L	H	BA, CA, A10	READ/READA	Interrupting burst write operation to start read operation.	Read/ReadA
	L	H	L	L	BA, CA, A10	WRIT/WRITA	Interrupting burst write operation to start new write operation.	Write/WriteA
	L	L	H	H	BA, RA	ACT	ILLEGAL*[11]	—
	L	L	H	L	BA, A10	PRE, PALL	Interrupting write operation to start pre-charge.	Idle
	L	L	L	×	×		ILLEGAL	—
Write recovering*[9]	H	×	×	×	×	DESL	NOP	Active
	L	H	H	H	×	NOP	NOP	Active
	L	H	H	L	×	BST	ILLEGAL	—
	L	H	L	H	BA, CA, A10	READ/READA	Starting read operation.	Read/ReadA
	L	H	L	L	BA, CA, A10	WRIT/WRITA	Starting new write operation.	Write/WriteA
	L	L	H	H	BA, RA	ACT	ILLEGAL*[11]	—
	L	L	H	L	BA, A10	PRE/PALL	ILLEGAL*[11]	—
	L	L	L	×	×		ILLEGAL	—

Current state	/CS	/RAS	/CAS	/WE	Address	Command	Operation	Next state
Write with auto-pre-charge*10	H	×	×	×	×	DESL	NOP	Precharging
	L	H	H	H	×	NOP	NOP	Precharging
	L	H	H	L	×	BST	ILLEGAL	—
	L	H	L	H	BA, CA, A10	READ/READA	ILLEGAL*14	—
	L	H	L	L	BA, CA, A10	WRIT/WRIT A	ILLEGAL*14	—
	L	L	H	H	BA, RA	ACT	ILLEGAL*11, 14	—
	L	L	H	L	BA, A10	PRE, PALL	ILLEGAL*11, 14	—
	L	L	L	×	×		ILLEGAL	—

Remark: H: VIH. L: VIL. ×: VIH or VIL

Notes: 1. The DDR SDRAM is in "Precharging" state for tRP after precharge command is issued.
2. The DDR SDRAM reaches "IDLE" state tRP after precharge command is issued.
3. The DDR SDRAM is in "Refresh" state for tRFC after auto-refresh command is issued.
4. The DDR SDRAM is in "Activating" state for tRCD after ACT command is issued.
5. The DDR SDRAM is in "Active" state after "Activating" is completed.
6. The DDR SDRAM is in "READ" state until burst data have been output and DQ output circuits are turned off.
7. The DDR SDRAM is in "READ with auto-precharge" from READA command until burst data has been output and DQ output circuits are turned off.
8. The DDR SDRAM is in "WRITE" state from WRIT command to the last burst data are input.
9. The DDR SDRAM is in "Write recovering" for tWR after the last data are input.
10. The DDR SDRAM is in "Write with auto-precharge" until tWR after the last data has been input.
11. This command may be issued for other banks, depending on the state of the banks.
12. All banks must be in "IDLE".
13. Before executing a write command to stop the preceding burst read operation, BST command must be issued.
14. The DDR SDRAM supports the concurrent auto-precharge feature, a read with auto-precharge enabled,or a write with auto-precharge enabled, may be followed by any column command to other banks, as long as that command does not interrupt the read or write data transfer, and all other related limitations apply. (E.g. Conflict between READ data and WRITE data must be avoided.)

The minimum delay from a read or write command with auto precharge enabled, to a command to a different bank, is summarized below.

From command	To command (different bank, non-interrupting command)	Minimum delay (Concurrent AP supported)	Units
Read w/AP	Read or Read w/AP	BL/2	tCK
	Write or Write w/AP	CL(rounded up)+ (BL/2)	tCK
	Precharge or Activate	1	tCK
Write w/AP	Read or Read w/AP	1 + (BL/2) + tWTR	tCK
	Write or Write w/AP	BL/2	tCK
	Precharge or Activate	1	tCK

Command Truth Table for CKE

Current State	CKE								
	n – 1	n	/CS	/RAS	/CAS	/WE	Address	Operation	Notes
Self refresh	H	×	×	×	×	×	×	INVALID, CK (n-1) would exit self refresh	
	L	H	H	×	×	×	×	Self refresh recovery	
	L	H	L	H	H	×	×	Self refresh recovery	
	L	H	L	H	L	×	×	ILLEGAL	
	L	H	L	L	×	×	×	ILLEGAL	
	L	L	×	×	×	×	×	Maintain self refresh	
Self refresh recovery	H	H	H	×	×	×	×	Idle after tRC	
	H	H	L	H	H	×	×	Idle after tRC	
	H	H	L	H	L	×	×	ILLEGAL	
	H	H	L	L	×	×	×	ILLEGAL	
	H	L	H	×	×	×	×	ILLEGAL	
	H	L	L	H	H	×	×	ILLEGAL	
	H	L	L	H	L	×	×	ILLEGAL	
	H	L	L	L	×	×	×	ILLEGAL	
Power down	H	×	×	×	×	×		INVALID, CK (n – 1) would exit power down	
	L	H	H	×	×	×	×	EXIT power down → Idle	
	L	H	L	H	H	H	×		
	L	L	×	×	×	×	×	Maintain power down mode	
All banks idle	H	H	H	×	×	×		Refer to operations in Function Truth Table	
	H	H	L	H	×	×		Refer to operations in Function Truth Table	
	H	H	L	L	H	×		Refer to operations in Function Truth Table	
	H	H	L	L	L	H	×	CBR (auto) refresh	
	H	H	L	L	L	L	OPCODE	Refer to operations in Function Truth Table	
	H	L	H	×	×	×		Refer to operations in Function Truth Table	
	H	L	L	H	×	×		Refer to operations in Function Truth Table	
	H	L	L	L	H	×		Refer to operations in Function Truth Table	
	H	L	L	L	L	H	×	Self refresh	1
	H	L	L	L	L	L	OPCODE	Refer to operations in Function Truth Table	
	L	×	×	×	×	×	×	Power down	1
Row active	H	×	×	×	×	×	×	Refer to operations in Function Truth Table	
	L	×	×	×	×	×	×	Power down	1

Remark: H: VIH. L: VIL. ×: VIH or VIL

Note: Self refresh can be entered only from the all banks idle state. Power down can be entered only from all banks idle or row active state.

Auto-refresh command [REF]

This command executes auto-refresh. The banks and the ROW addresses to be refreshed are internally determined by the internal refresh controller. The average refresh cycle is 15.6 μs. The output buffer becomes High-Z after auto-refresh start. Precharge has been completed automatically after the auto-refresh. The ACT or MRS command can be issued tRFC after the last auto-refresh command.

Self-refresh entry [SELF]

This command starts self-refresh. The self-refresh operation continues as long as CKE is held Low. During the self-refresh operation, all ROW addresses are repeated refreshing by the internal refresh controller. A self-refresh is terminated by a self-refresh exit command.

Power down mode entry [PDEN]

tPDEN (= 1 cycle) after the cycle when [PDEN] is issued. The DDR SDRAM enters into power-down mode. In power down mode, power consumption is suppressed by deactivating the input initial circuit. Power down mode continues while CKE is held Low. No internal refresh operation occurs during the power down mode. [PDEN] do not disable DLL.

Self-refresh exit [SELFX]

This command is executed to exit from self-refresh mode. To issue non-read commands, tSNR has to be satisfied. ((tSNR =)15 cycles for tCK = 5.0 ns after [SELFX]) To issue read command, tSRD has to be satisfied to adjust DOUT timing by DLL. (200 cycles after [SELFX]) After the exit, input auto-refresh command within 15.6 μs.

Power down exit [PDEX]

The DDR SDRAM can exit from power down mode tPDEX (1 cycle min.) after the cycle when [PDEX] is issued.

Simplified State Diagram

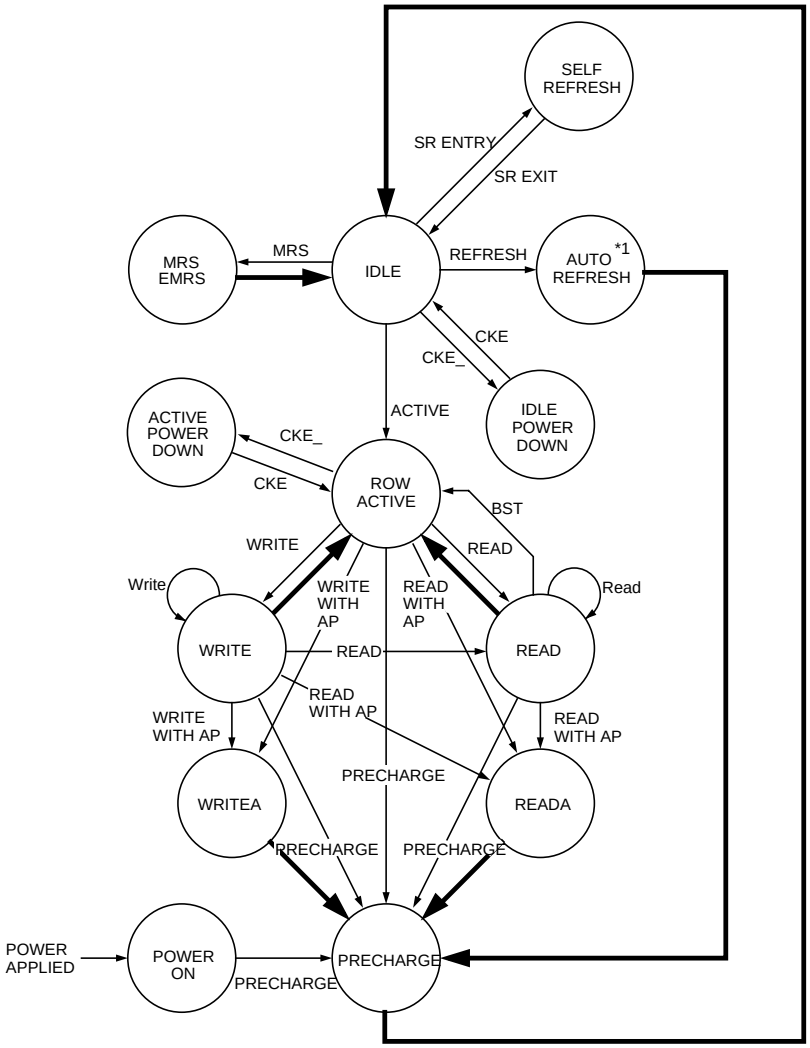

Automatic transition after completion of command.
Transition resulting from command input.

Note: 1. After the auto-refresh operation, precharge operation is performed automatically and enter the IDLE state.

Operation of the DDR SDRAM

Power-up Sequence

(1)Apply power and maintain CKE at an LVCMOS low state (all other inputs are undefined).
Apply VDD before or at the same time as VDDQ.
Apply VDDQ before or at the same time as VTT and VREF.
(2) Start clock and maintain stable condition for a minimum of 200 µs.
(3) After the minimum 200 µs of stable power and clock (CK, /CK), apply NOP and take CKE high.
(4) Issue precharge all command for the device.
(5) Issue EMRS to enable DLL.
(6) Issue a mode register set command (MRS) for "DLL reset" with bit A8 set to high (An additional 200 cycles of clock input is required to lock the DLL after every DLL reset).
(7) Issue precharge all command for the device.
(8) Issue 2 or more auto-refresh commands.
(9) Issue a mode register set command to initialize device operation with bit A8 set to low in order to avoid resetting the DLL.

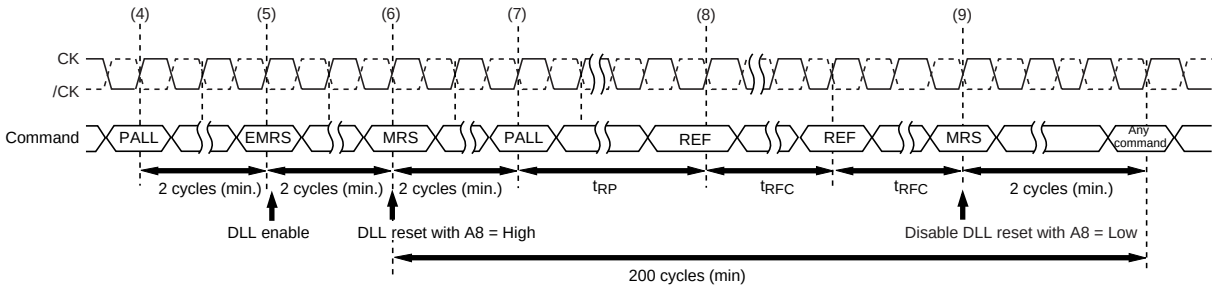

Power-up Sequence after CKE Goes High

Mode Register and Extended Mode Register Set

There are two mode registers, the mode register and the extended mode register so as to define the operating mode. Parameters are set to both through the A0 to the A11 and BA0, BA1 pins by the mode register set command [MRS] or the extended mode register set command [EMRS]. The mode register and the extended mode register are set by inputting signal via the A0 to the A11 and BA0, BA1 during mode register set cycles. BA0 and BA1 determine which one of the mode register or the extended mode register are set. Prior to a read or a write operation, the mode register must be set.
Remind that no other parameters shown in the table bellow are allowed to input to the registers.

BA0	BA1	A11	A10	A9	A8	A7	A6	A5	A4	A3	A2	A1	A0
0	0	0	0	0	DR	0	LMODE			BT	BL		

MRS

A8	DLL Reset
0	No
1	Yes

A6	A5	A4	CAS Latency
0	1	1	3

A3	Burst Type
0	Sequential
1	Interleave

A2	A1	A0	Burst Length	
			BT=0	BT=1
0	0	1	2	2
0	1	0	4	4
0	1	1	8	8

Mode Register Set [MRS] (BA0 = 0, BA1 = 0)

BA0	BA1	A11	A10	A9	A8	A7	A6	A5	A4	A3	A2	A1	A0
1	0	0	0	0	0	0	0	0	0	0	0	DS	DLL

EMRS

A1	Driver Strength
0	Normal
1	Weak

A0	DLL Control
0	DLL Enable
1	DLL Disable

Extended Mode Register Set [EMRS] (BA0 = 1, BA1 = 0)

Burst Operation

The burst type (BT) and the first three bits of the column address determine the order of a data out.

Burst length = 2

Starting Ad.	Addressing(decimal)	
A0	Sequence	Interleave
0	0, 1,	0, 1,
1	1, 0,	1, 0,

Burst length = 4

Starting Ad.		Addressing(decimal)	
A1	A0	Sequence	Interleave
0	0	0, 1, 2, 3,	0, 1, 2, 3,
0	1	1, 2, 3, 0,	1, 0, 3, 2,
1	0	2, 3, 0, 1,	2, 3, 0, 1,
1	1	3, 0, 1, 2,	3, 2, 1, 0,

Burst length = 8

Starting Ad.			Addressing(decimal)	
A2	A1	A0	Sequence	Interleave
0	0	0	0, 1, 2, 3, 4, 5, 6, 7,	0, 1, 2, 3, 4, 5, 6, 7,
0	0	1	1, 2, 3, 4, 5, 6, 7, 0,	1, 0, 3, 2, 5, 4, 7, 6,
0	1	0	2, 3, 4, 5, 6, 7, 0, 1,	2, 3, 0, 1, 6, 7, 4, 5,
0	1	1	3, 4, 5, 6, 7, 0, 1, 2,	3, 2, 1, 0, 7, 6, 5, 4,
1	0	0	4, 5, 6, 7, 0, 1, 2, 3,	4, 5, 6, 7, 0, 1, 2, 3,
1	0	1	5, 6, 7, 0, 1, 2, 3, 4,	5, 4, 7, 6, 1, 0, 3, 2,
1	1	0	6, 7, 0, 1, 2, 3, 4, 5,	6, 7, 4, 5, 2, 3, 0, 1,
1	1	1	7, 0, 1, 2, 3, 4, 5, 6,	7, 6, 5, 4, 3, 2, 1, 0,

Read/Write Operations

Bank active

A read or a write operation begins with the bank active command [ACT]. The bank active command determines a bank address and a row address. For the bank and the row, a read or a write command can be issued tRCD after the ACT is issued.

Read operation

The burst length (BL), the /CAS latency (CL) and the burst type (BT) of the mode register are referred when a read command is issued. The burst length (BL) determines the length of a sequential output data by the read command that can be set to 2, 4, or 8. The starting address of the burst read is defined by the column address, the bank select address which are loaded via the A0 to A11 and BA0, BA1 pins in the cycle when the read command is issued. The data output timing are characterized by CL and tAC. The read burst start CL • tCK + tAC (ns) after the clock rising edge where the read command are latched. The DDR SDRAM output the data strobe through DQS simultaneously with data. tRPRE prior to the first rising edge of the data strobe, the DQS are driven Low from VTT level. This low period of DQS is referred as read preamble. The burst data are output coincidentally at both the rising and falling edge of the data strobe. The DQ pins become High-Z in the next cycle after the burst read operation completed. tRPST from the last falling edge of the data strobe, the DQS pins become High-Z. This low period of DQS is referred as read postamble.

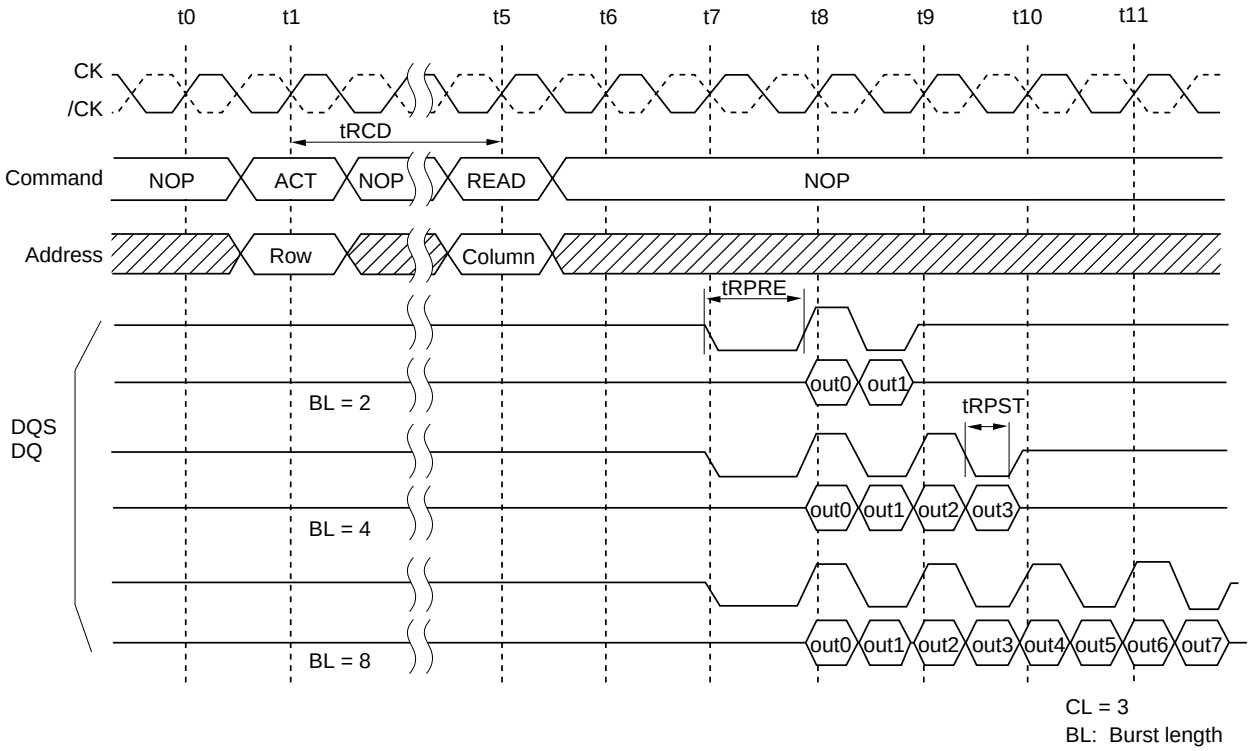

Read Operation (Burst Length)

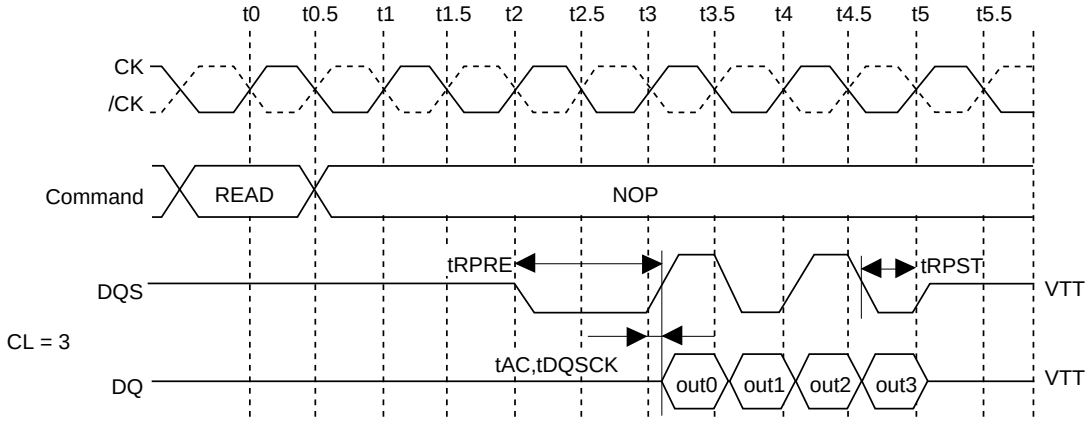

Read Operation (/CAS Latency)

Write operation

The burst length (BL) and the burst type (BT) of the mode register are referred when a write command is issued. The burst length (BL) determines the length of a sequential data input by the write command that can be set to 2, 4, or 8. The latency from write command to data input is fixed to 1. The starting address of the burst read is defined by the column address, the bank select address which are loaded via the A0 to A11, BA0 to BA1 pins in the cycle when the write command is issued. DQS should be input as the strobe for the input-data and DM as well during burst operation. tWPRE prior to the first rising edge of the DQS should be set to Low and tWPST after the last falling edge of the data strobe can be set to High-Z. The leading low period of DQS is referred as write preamble. The last low period of DQS is referred as write postamble.

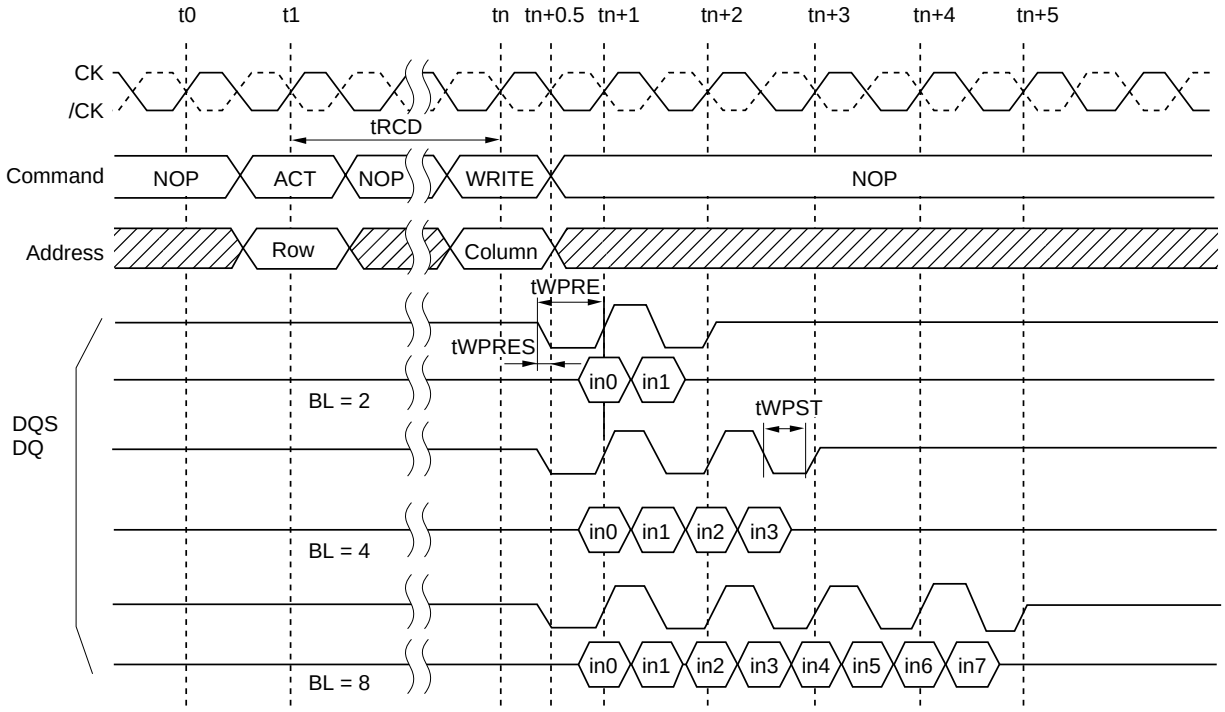

BL: Burst length

Write Operation

Burst Stop

Burst stop command during burst read

The burst stop (BST) command is used to stop data output during a burst read. The BST command stops the burst read and sets the output buffer to High-Z. tBSTZ (= CL) cycles after a BST command issued, the DQ pins become High-Z. The BST command is not supported for the burst write operation. Note that bank address is not referred when this command is executed.

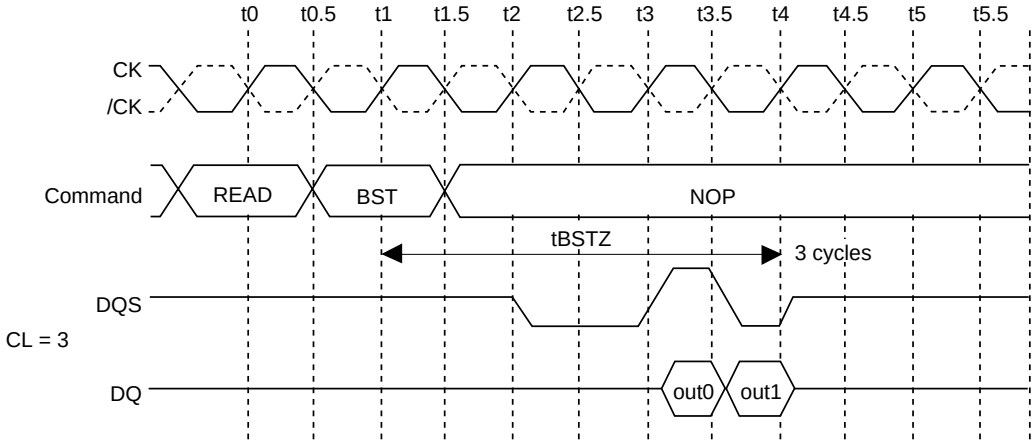

CL: /CAS latency

Burst Stop during a Read Operation

Auto Precharge

Read with auto-precharge

The precharge is automatically performed after completing a read operation. The precharge starts tRPD (BL/2) cycle after READA command input. tRAP specification for READA allows a read command with auto precharge to be issued to a bank that has been activated (opened) but has not yet satisfied the tRAS (min) specification. A column command to the other active bank can be issued the next cycle after the last data output. Read with auto-precharge command does not limit row commands execution for other bank. Refer to 'Function truth table and related note(Notes.*14).

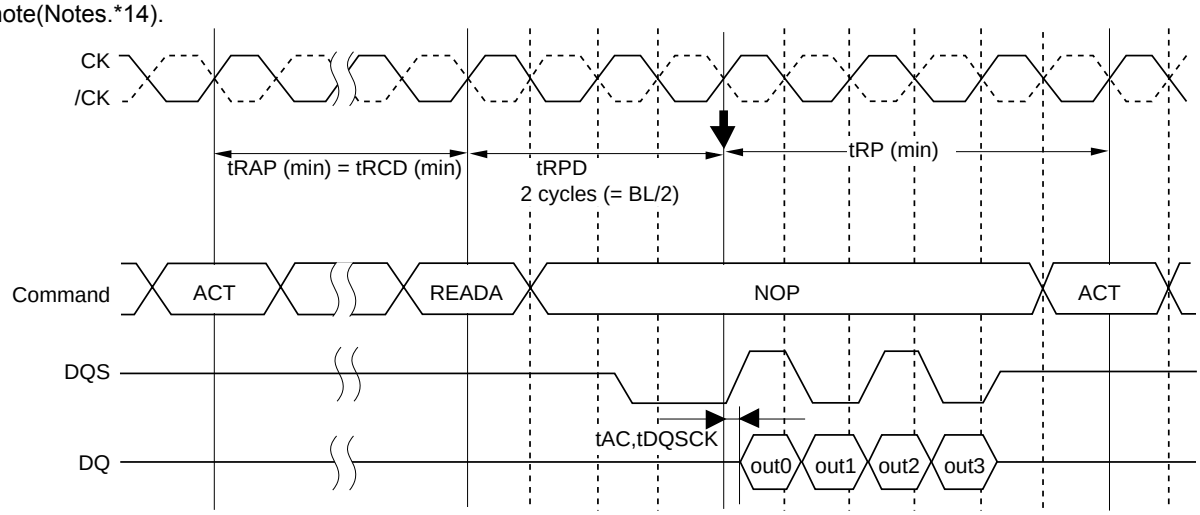

Note: Internal auto-precharge starts at the timing indicated by "↓".

Read with auto-precharge

Write with auto-precharge

The precharge is automatically performed after completing a burst write operation. The precharge operation is started (BL/ 2 + 4) cycles after WRITA command issued. A column command to the other banks can be issued the next cycle after the internal precharge command issued. Write with auto-precharge command does not limit row commands execution for other bank. Refer to the 'Read with Auto-Precharge Enabled, Write with Auto-Precharge Enabled' section. Refer to 'Function truth table and related note(Notes.*14)'.

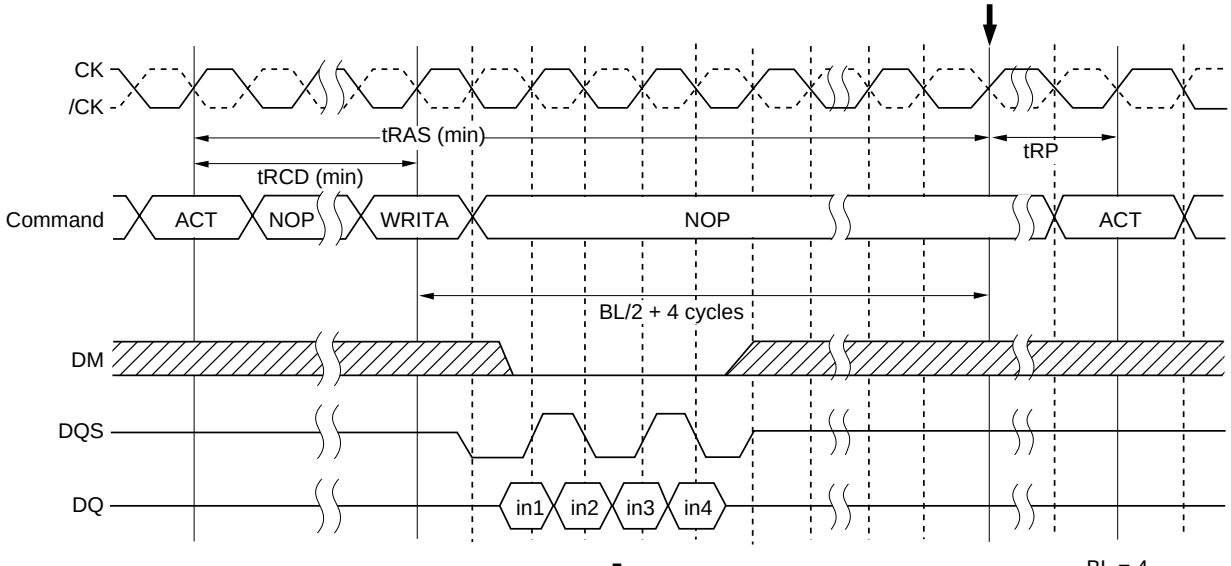

Note: Internal auto-precharge starts at the timing indicated by "↓".

Burst Write (BL = 4)

Command Intervals

A Read command to the consecutive Read command Interval

	Destination row of the consecutive read command			
	Bank address	Row address	State	Operation
1.	Same	Same	ACTIVE	The consecutive read can be performed after an interval of no less than 1 cycle to interrupt the preceding read operation.
2.	Same	Different	—	Precharge the bank to interrupt the preceding read operation. tRP after the precharge command, issue the ACT command. tRCD after the ACT command, the consecutive read command can be issued. See 'A read command to the consecutive precharge interval' section.
3.	Different	Any	ACTIVE	The consecutive read can be performed after an interval of no less than 1 cycle to interrupt the preceding read operation.
			IDLE	Precharge the bank without interrupting the preceding read operation. tRP after the precharge command, issue the ACT command. tRCD after the ACT command, the consecutive read command can be issued.

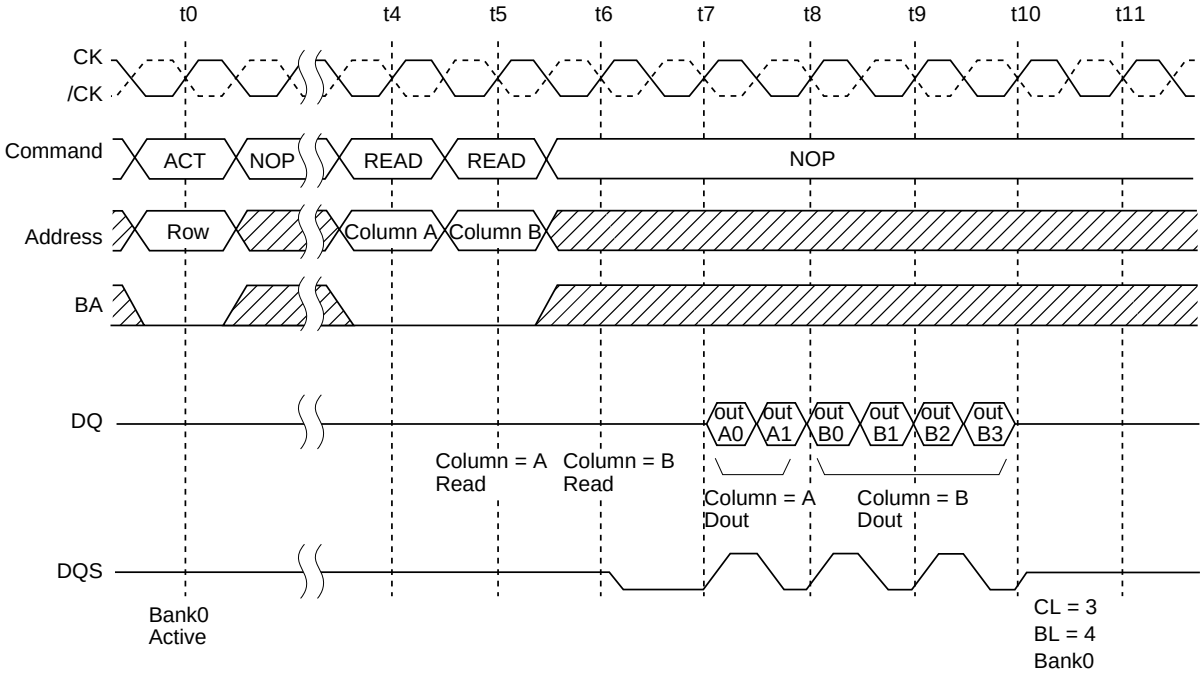

READ to READ Command Interval (same ROW address in the same bank)

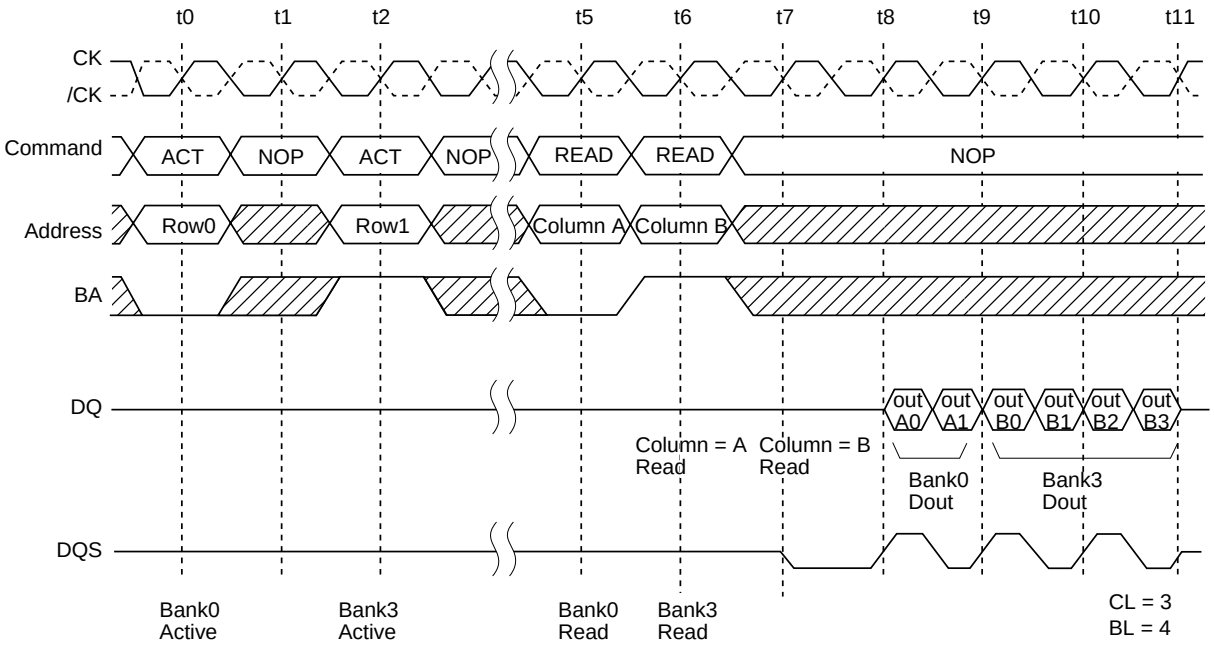

READ to READ Command Interval (different bank)

A Write command to the consecutive Write command Interval

	Destination row of the consecutive write command			
	Bank address	Row address	State	Operation
1.	Same	Same	ACTIVE	The consecutive write can be performed after an interval of no less than 1 cycle to interrupt the preceding write operation.
2.	Same	Different	—	Precharge the bank to interrupt the preceding write operation. tRP after the precharge command, issue the ACT command. tRCD after the ACT command, the consecutive write command can be issued. See 'A write command to the consecutive precharge interval' section.
3.	Different	Any	ACTIVE	The consecutive write can be performed after an interval of no less than 1 cycle to interrupt the preceding write operation.
			IDLE	Precharge the bank without interrupting the preceding write operation. tRP after the precharge command, issue the ACT command. tRCD after the ACT command, the consecutive write command can be issued.

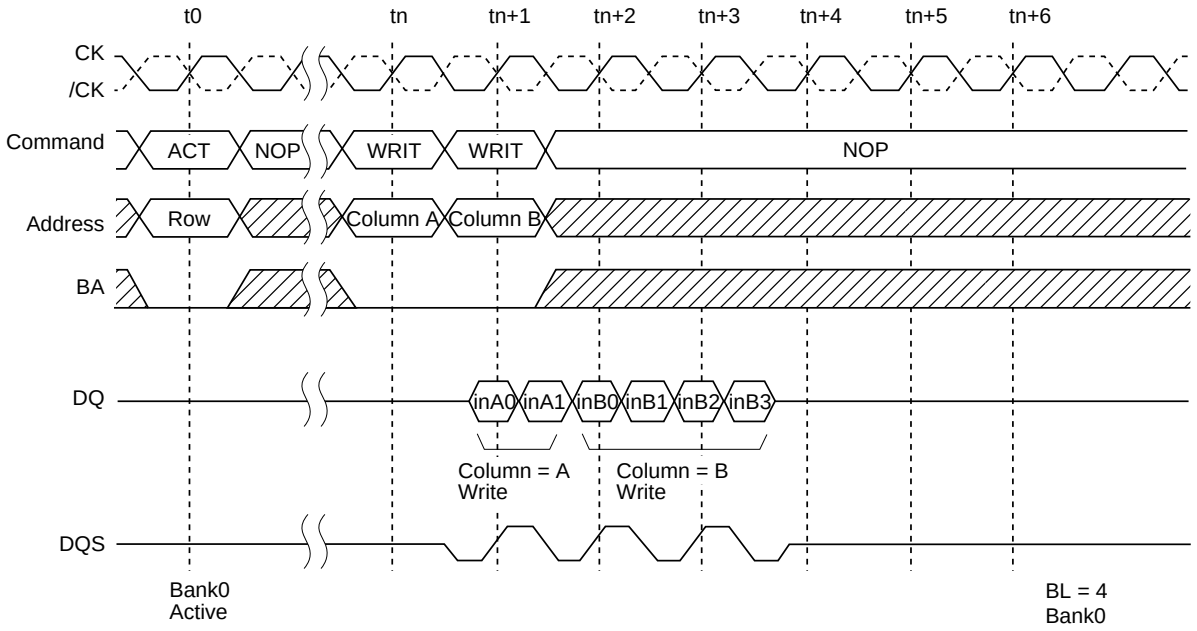

WRITE to WRITE Command Interval (same ROW address in the same bank)

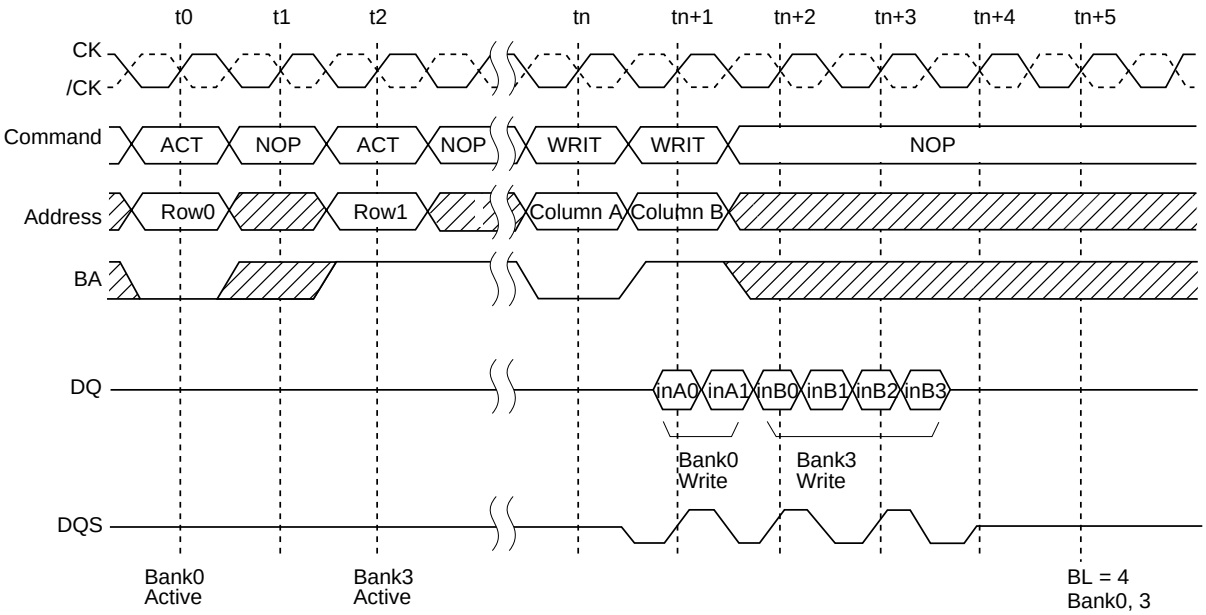

WRITE to WRITE Command Interval (different bank)

A Read command to the consecutive Write command interval with the BST command

	Destination row of the consecutive write command			
	Bank address	Row address	State	Operation
1.	Same	Same	ACTIVE	Issue the BST command. tBSTW (≥ tBSTZ) after the BST command, the consecutive write command can be issued.
2.	Same	Different	—	Precharge the bank to interrupt the preceding read operation. tRP after the precharge command, issue the ACT command. tRCD after the ACT command, the consecutive write command can be issued. See 'A read command to the consecutive precharge interval' section.
3.	Different	Any	ACTIVE	Issue the BST command. tBSTW (≥ tBSTZ) after the BST command, the consecutive write command can be issued.
			IDLE	Precharge the bank independently of the preceding read operation. tRP after the precharge command, issue the ACT command. tRCD after the ACT command, the consecutive write command can be issued.

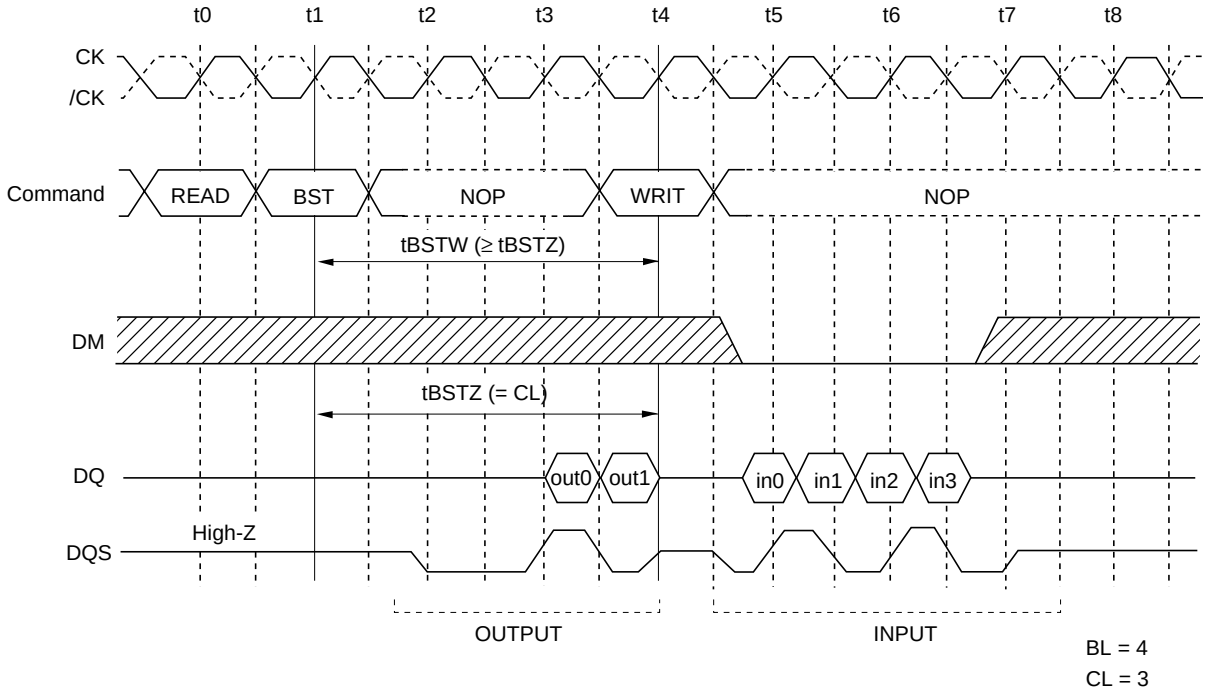

READ to WRITE Command Interval

A Write command to the consecutive Read command interval: To complete the burst operation

	Destination row of the consecutive read command			
	Bank address	Row address	State	Operation
1.	Same	Same	ACTIVE	To complete the burst operation, the consecutive read command should be performed tWRD (= BL/ 2 + 2) after the write command.
2.	Same	Different	—	Precharge the bank tWPD after the preceding write command. tRP after the precharge command, issue the ACT command. tRCD after the ACT command, the consecutive read command can be issued. See 'A read command to the consecutive precharge interval' section.
3.	Different	Any	ACTIVE	To complete a burst operation, the consecutive read command should be performed tWRD (= BL/ 2 + 2) after the write command.
			IDLE	Precharge the bank independently of the preceding write operation. tRP after the precharge command, issue the ACT command. tRCD after the ACT command, the consecutive read command can be issued.

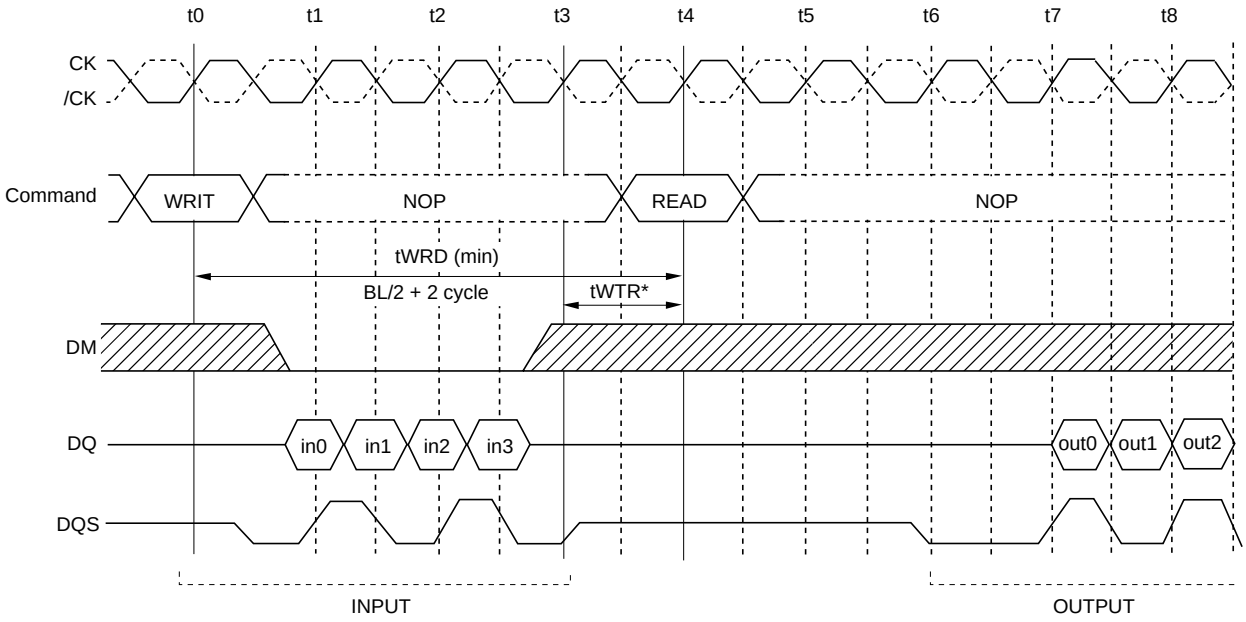

Note: tWTR is referenced from the first positive CK edge after the last desired data in pair tWTR.

BL = 4
CL = 3

WRITE to READ Command Interval

A Write command to the consecutive Read command interval: To interrupt the write operation

	Destination row of the consecutive read command			
	Bank address	Row address	State	Operation
1.	Same	Same	ACTIVE	DM must be input 1 cycle prior to the read command input to prevent from being written invalid data. In case, the read command is input in the next cycle of the write command, DM is not necessary.
2.	Same	Different	—	—*1
3.	Different	Any	ACTIVE	DM must be input 1 cycle prior to the read command input to prevent from being written invalid data. In case, the read command is input in the next cycle of the write command, DM is not necessary.
			IDLE	—*1

Note: 1. Precharge must be preceded to read command. Therefore read command can not interrupt the write operation in this case.

WRITE to READ Command Interval (Same bank, same ROW address)

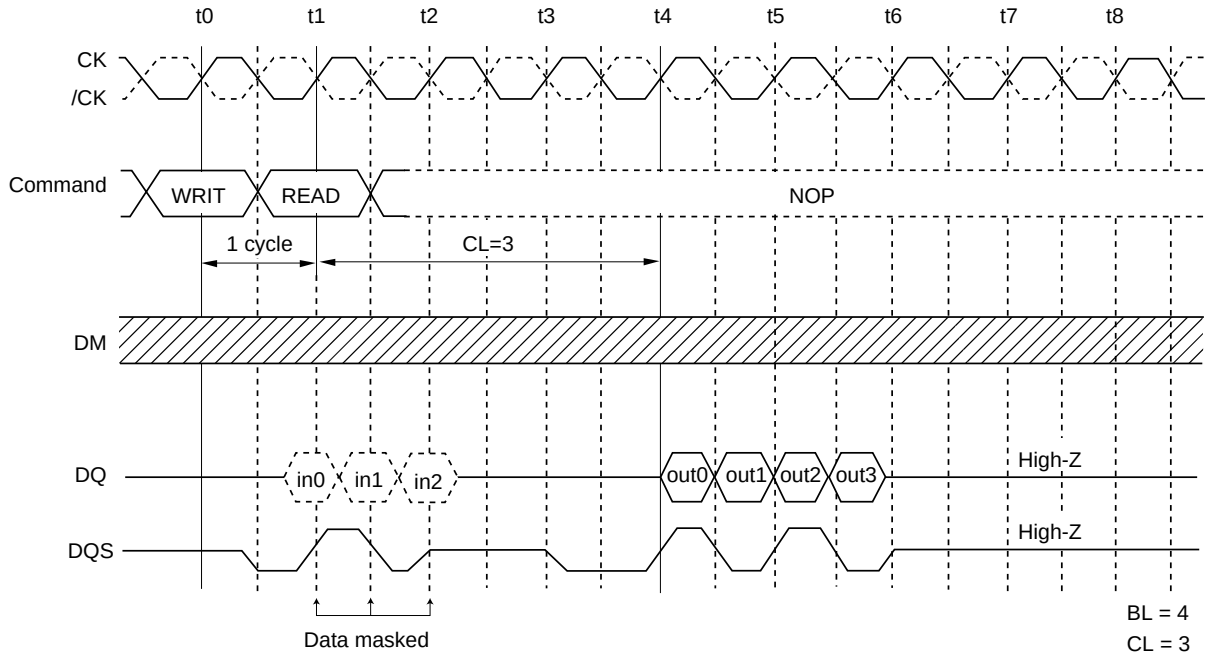

[WRITE to READ delay = 1 clock cycle]

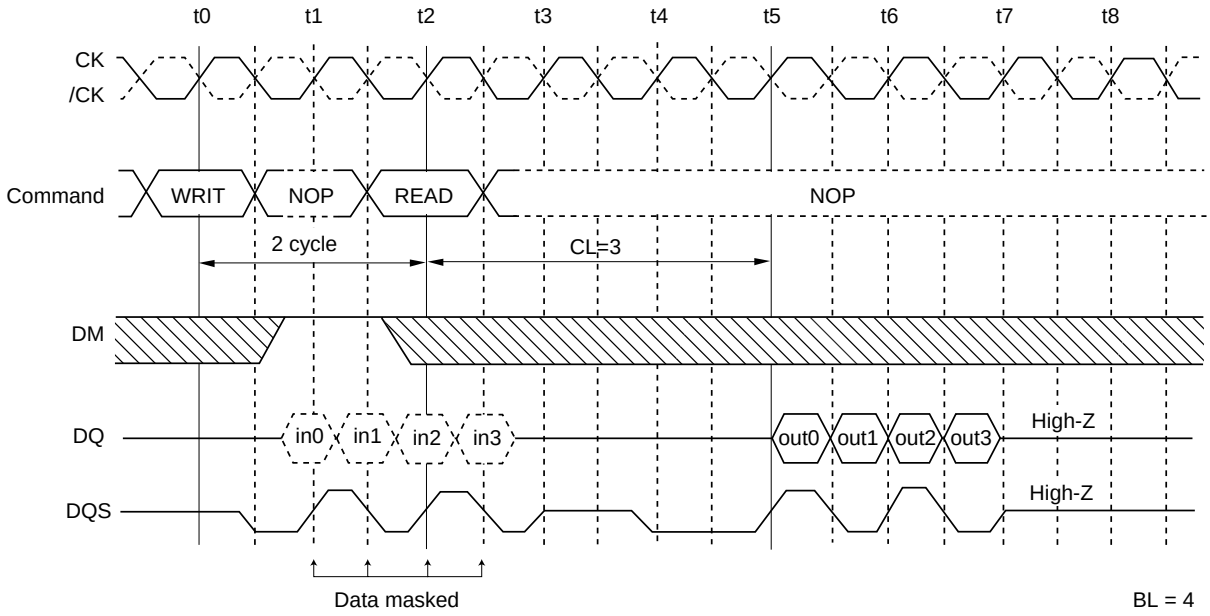

[WRITE to READ delay = 2 clock cycle]

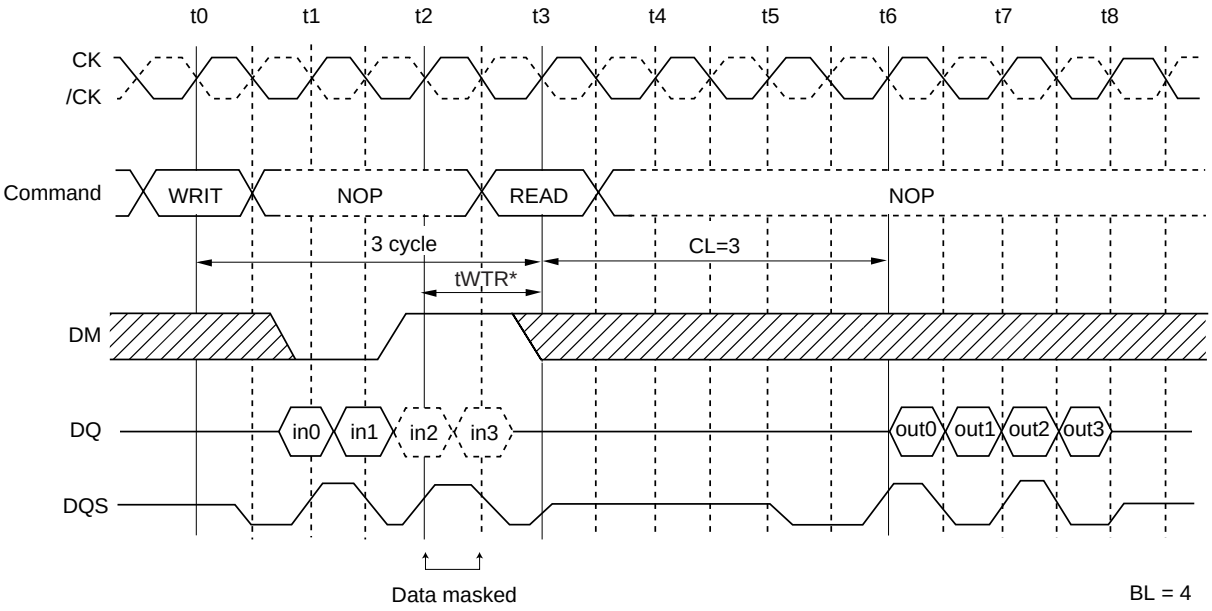

Note: tWTR is referenced from the first positive CK edge after the last desired data in pair tWTR.

[WRITE to READ delay = 3 clock cycle]

A Read command to the consecutive Precharge command interval (same bank): To output all data

To complete a burst read operation and get a burst length of data, the consecutive precharge command must be issued tRPD (= BL/ 2 cycles) after the read command is issued.

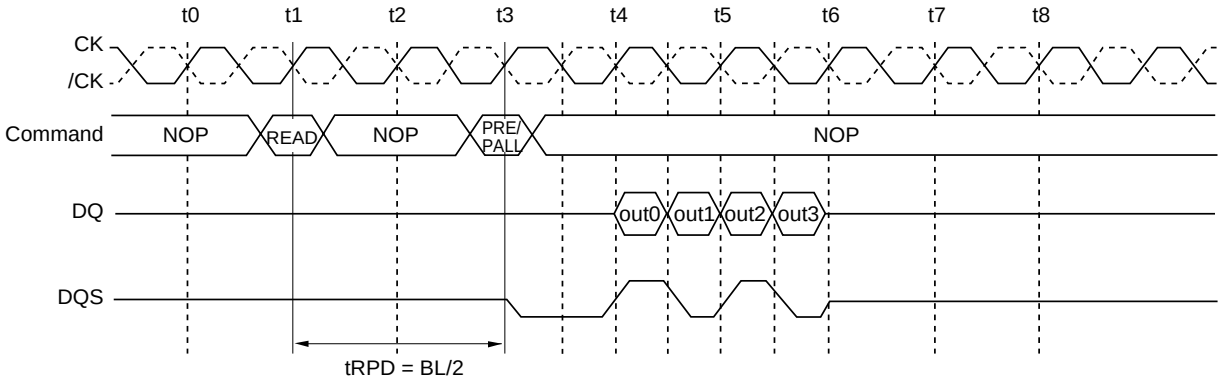

READ to PRECHARGE Command Interval (same bank): To output all data (CL = 3, BL = 4)

READ to PRECHARGE Command Interval (same bank): To stop output data

A burst data output can be interrupted with a precharge command. All DQ pins and DQS pins become High-Z tHZP (= CL) after the precharge command.

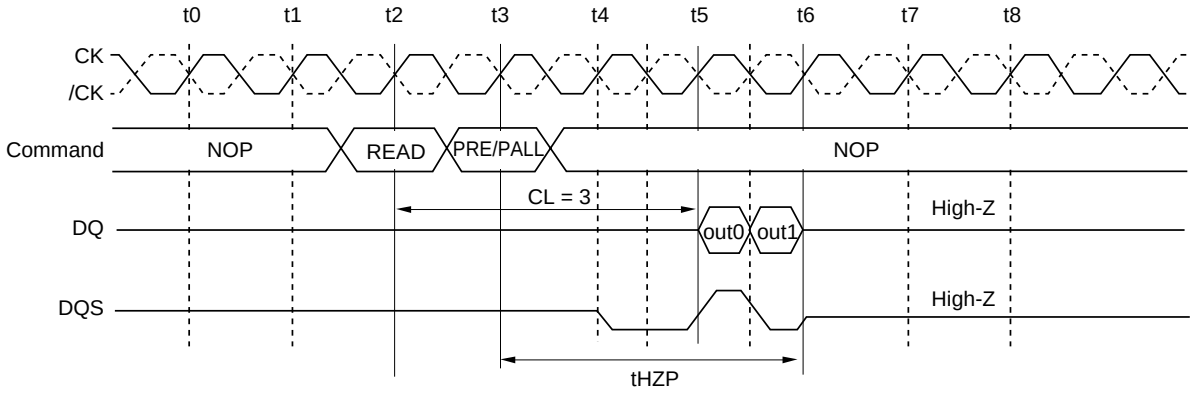

READ to PRECHARGE Command Interval (same bank): To stop output data (CL = 3, BL = 2, 4, 8)

A Write command to the consecutive Precharge command interval (same bank)

The minimum interval tWPD is necessary between the write command and the precharge command.

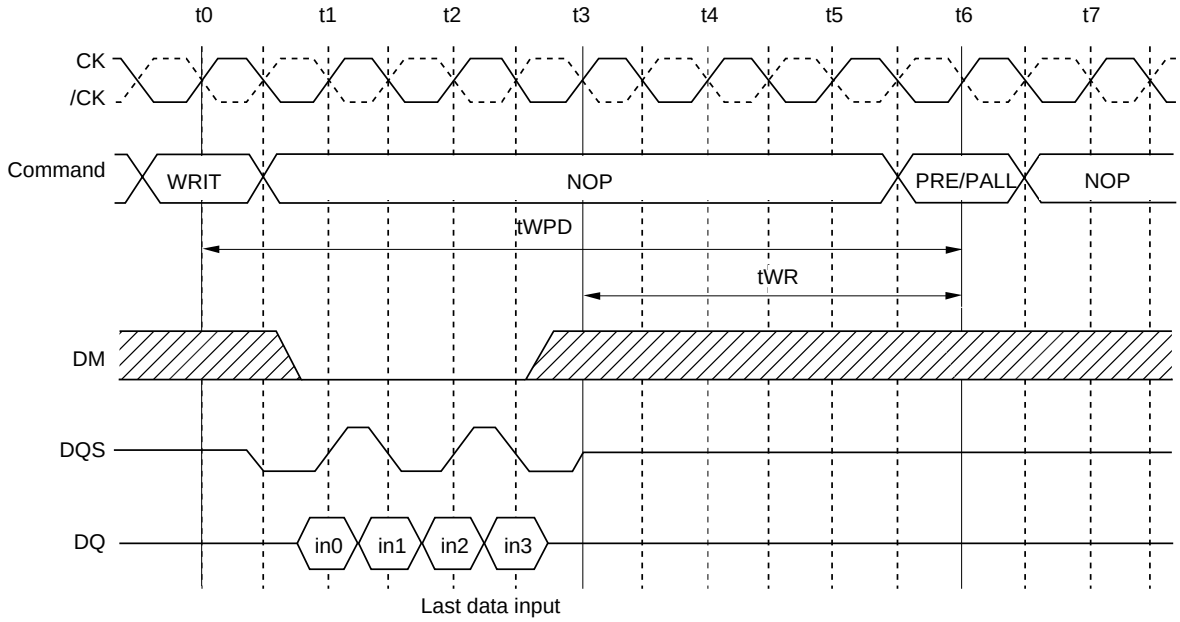

WRITE to PRECHARGE Command Interval (same bank) (BL = 4)

Precharge Termination in Write Cycles

During a burst write cycle without auto precharge, the burst write operation is terminated by a precharge command of the same bank. In order to write the last input data, tWR (min) must be satisfied. When the precharge command is issued, the invalid data must be masked by DM.

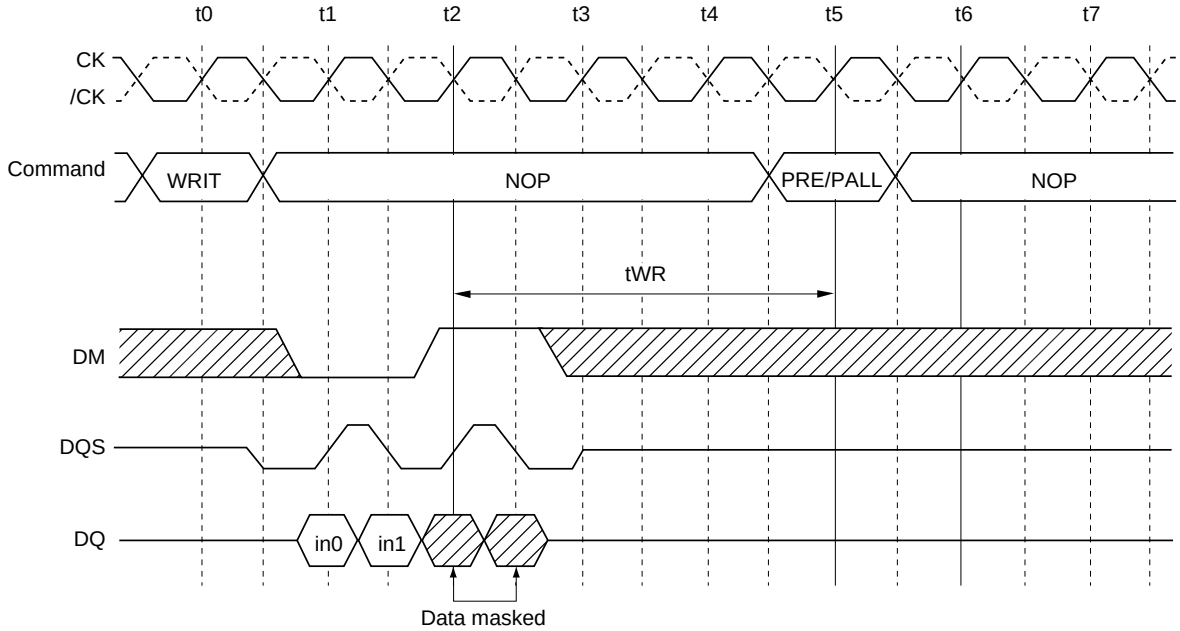

Precharge Termination in Write Cycles (same bank) (BL = 4)

Bank active command interval

	Destination row of the consecutive ACT command			
	Bank address	Row address	State	Operation
1.	Same	Any	ACTIVE	Two successive ACT commands can be issued at tRC interval. In between two successive ACT operations, precharge command should be executed.
2.	Different	Any	ACTIVE	Precharge the bank. tRP after the precharge command, the consecutive ACT command can be issued.
			IDLE	tRRD after an ACT command, the next ACT command can be issued.

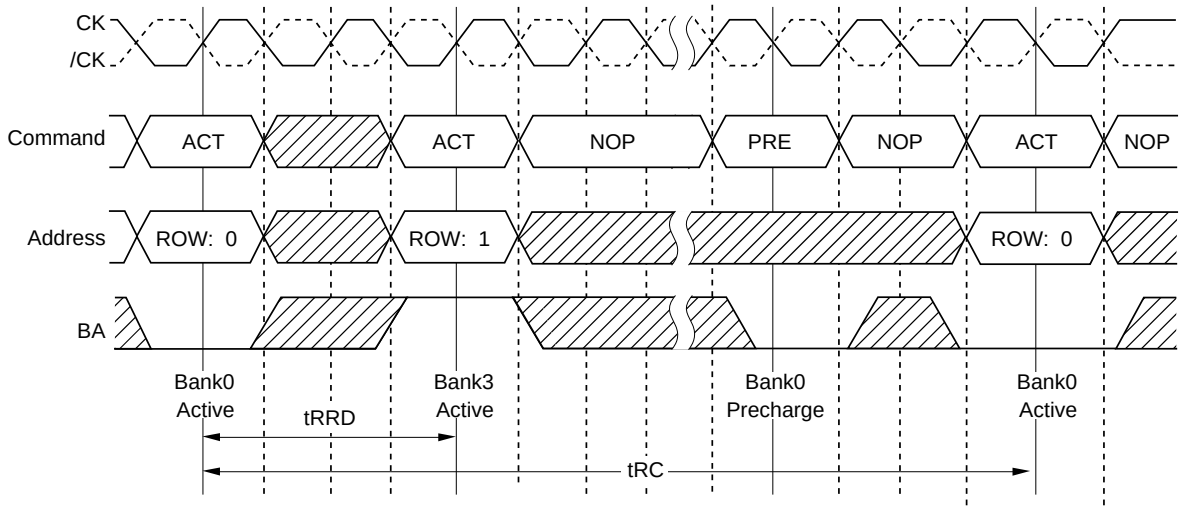

Bank Active to Bank Active

Mode register set to Bank-active command interval

The interval between setting the mode register and executing a bank-active command must be no less than tMRD.

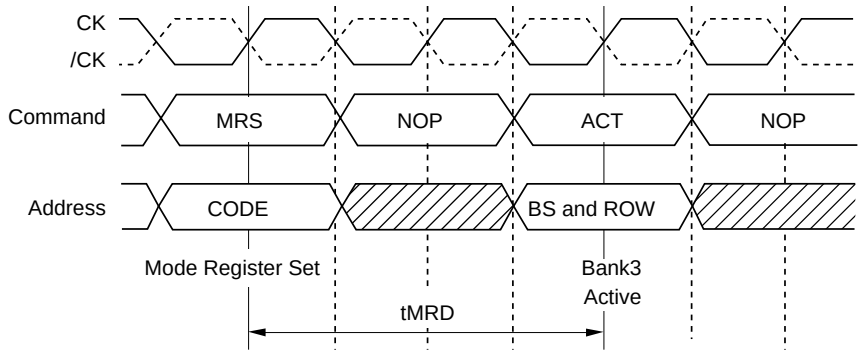

DM Control

DM can mask input data. In ×16 products, UDM and LDM can mask the upper and lower byte of input data, respectively. By setting DM to Low, data can be written. When DM is set to High, the corresponding data is not written, and the previous data is held. The latency between DM input and enabling/disabling mask function is 0.

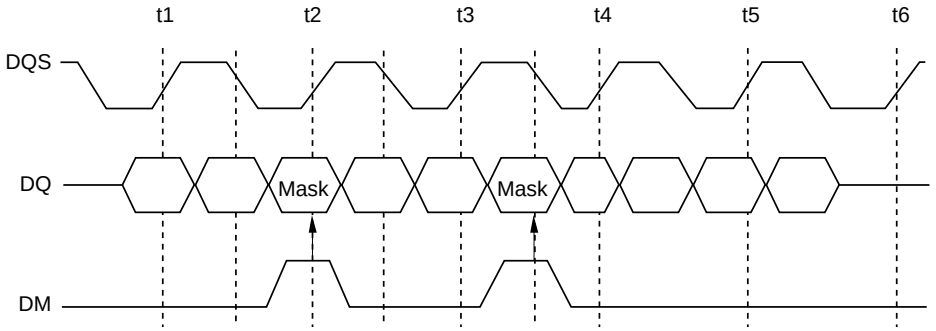

Write mask latency = 0

DM Control

Timing Waveforms

Command and Addresses Input Timing Definition

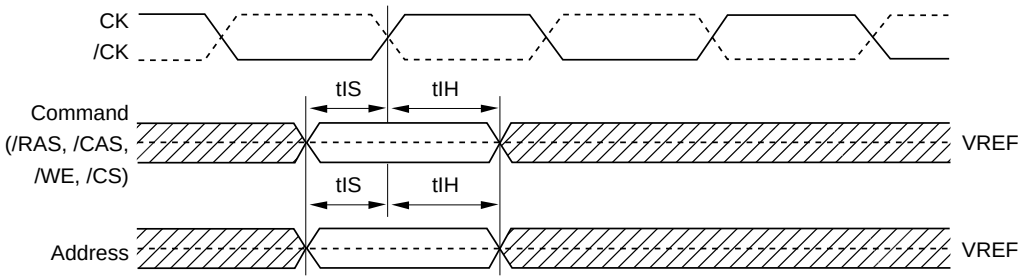

Read Timing Definition

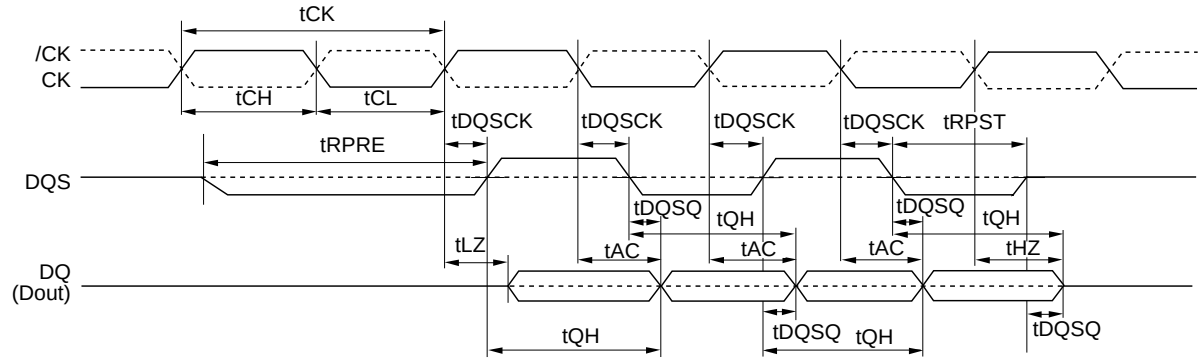

Write Timing Definition

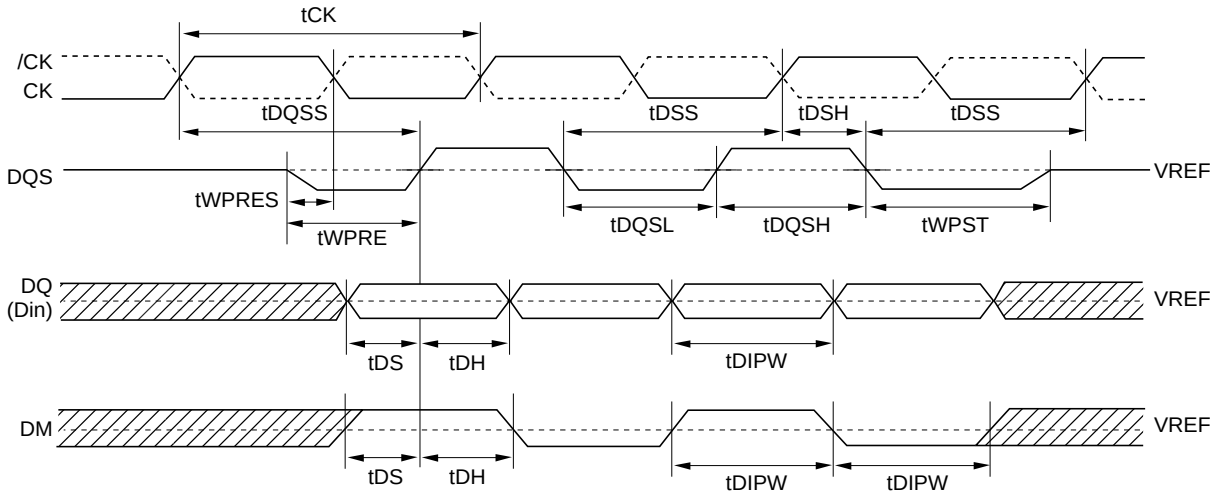

Read Cycle

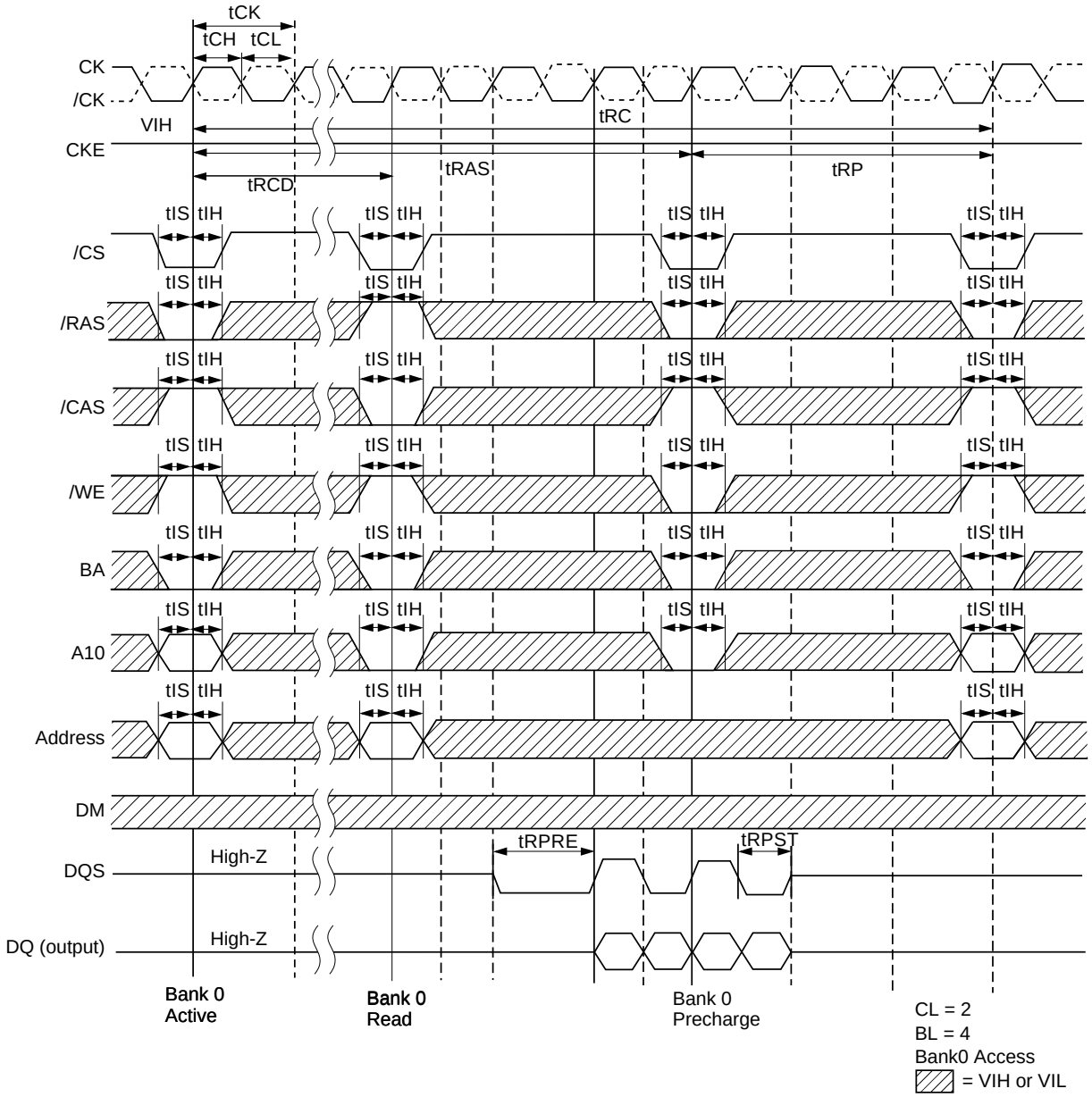
tCK
tCH
tCL
CK
/CK
VIH
CKE
tRC
tRAS
tRP
tRCD
tIS
tIH
/CS
/RAS
/CAS
/WE
BA
A10
Address
DM
tRPRE
tRPST
DQS
High-Z
DQ (output)
High-Z
Bank 0
Active
Bank 0
Read
Bank 0
Precharge
CL = 2
BL = 4
Bank0 Access
= VIH or VIL

Write Cycle

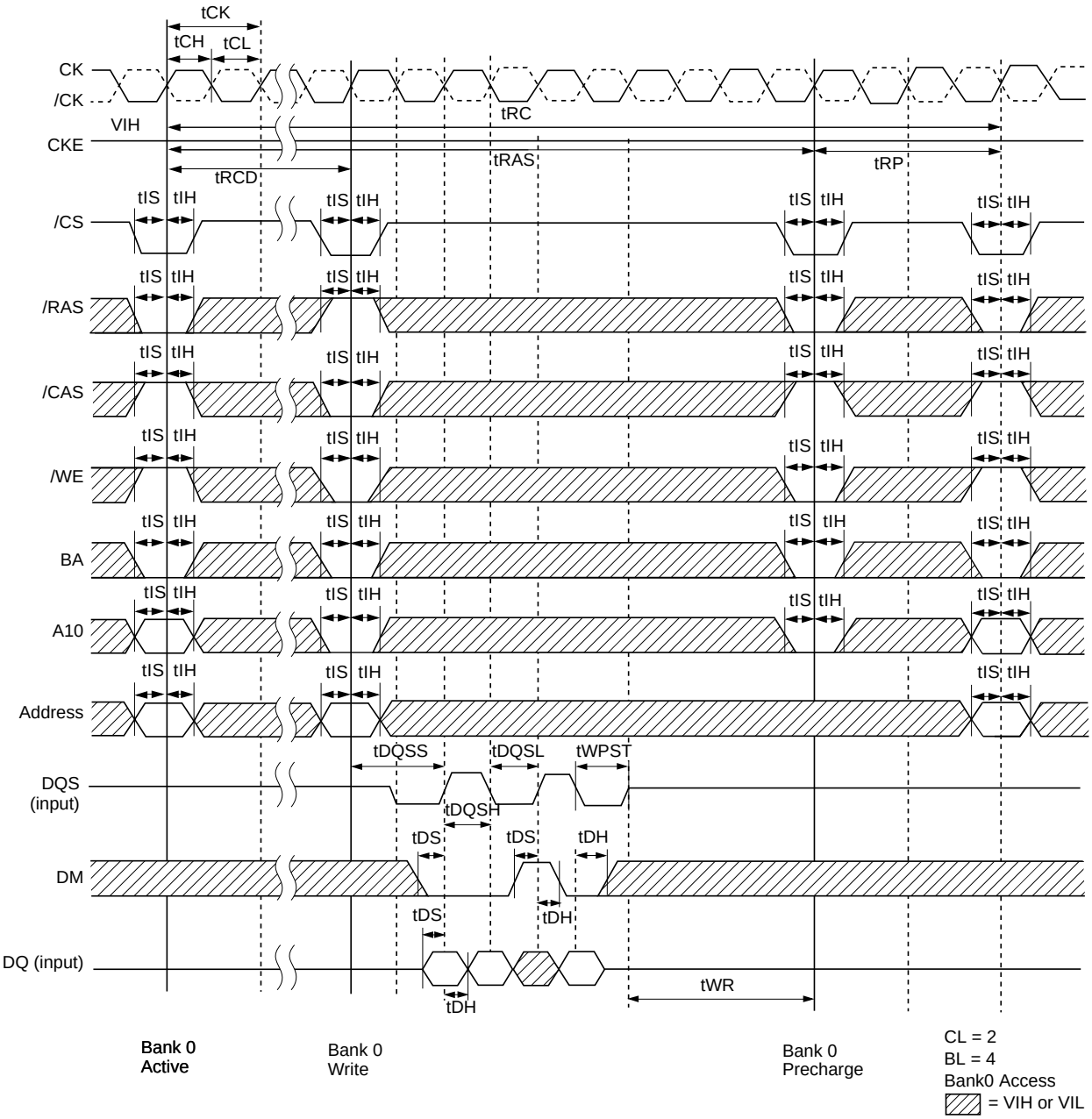
tCK
tCH
tCL
CK
/CK
VIH
CKE
tRC
tRAS
tRP
tRCD
tIS
tIH
/CS
/RAS
/CAS
/WE
BA
A10
Address
tDQSS
tDQSL
tWPST
DQS
(input)
tDQSH
tDS
tDH
DM
DQ (input)
tWR
Bank 0
Active
Bank 0
Write
Bank 0
Precharge
CL = 2
BL = 4
Bank0 Access
= VIH or VIL

Mode Register Set Cycle

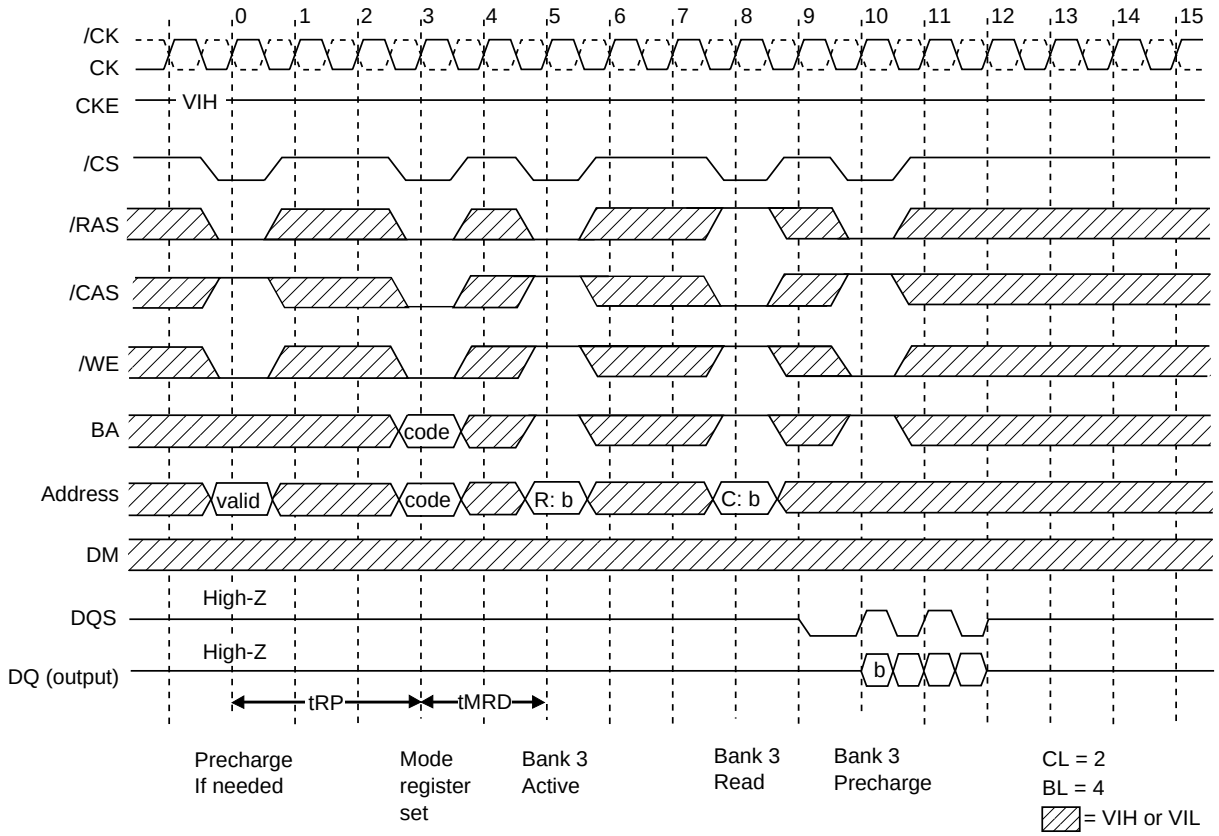

Read/Write Cycle

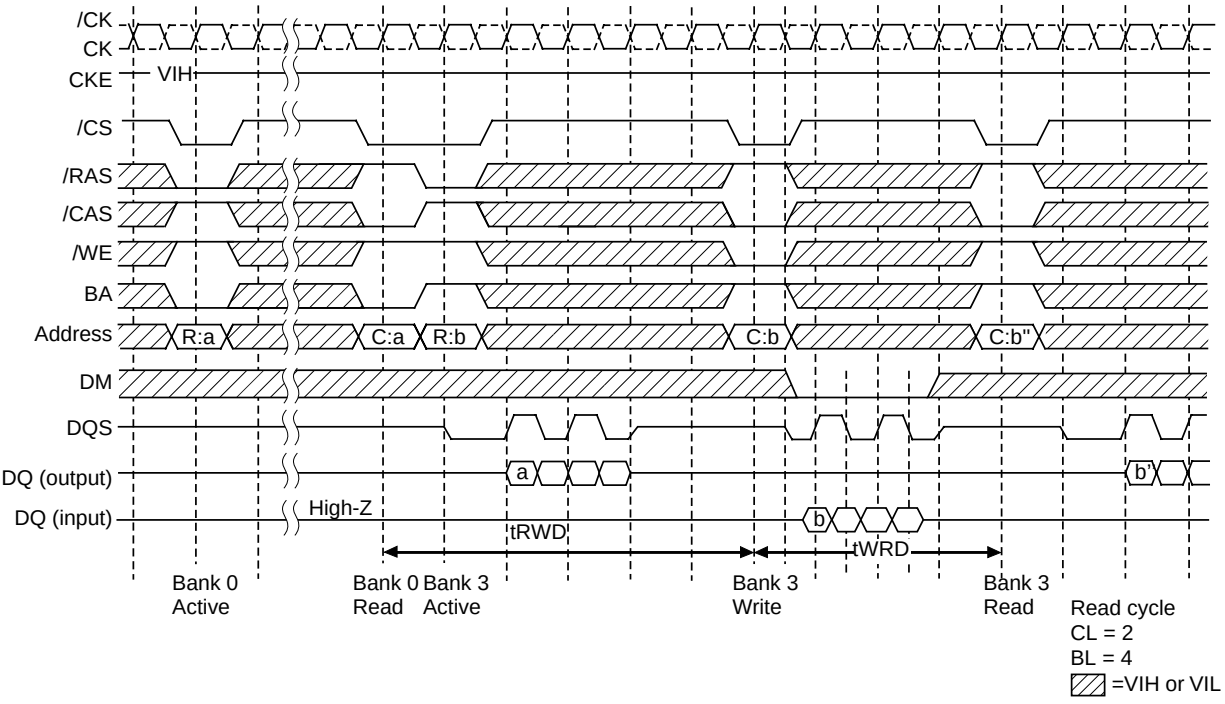

Auto Refresh Cycle

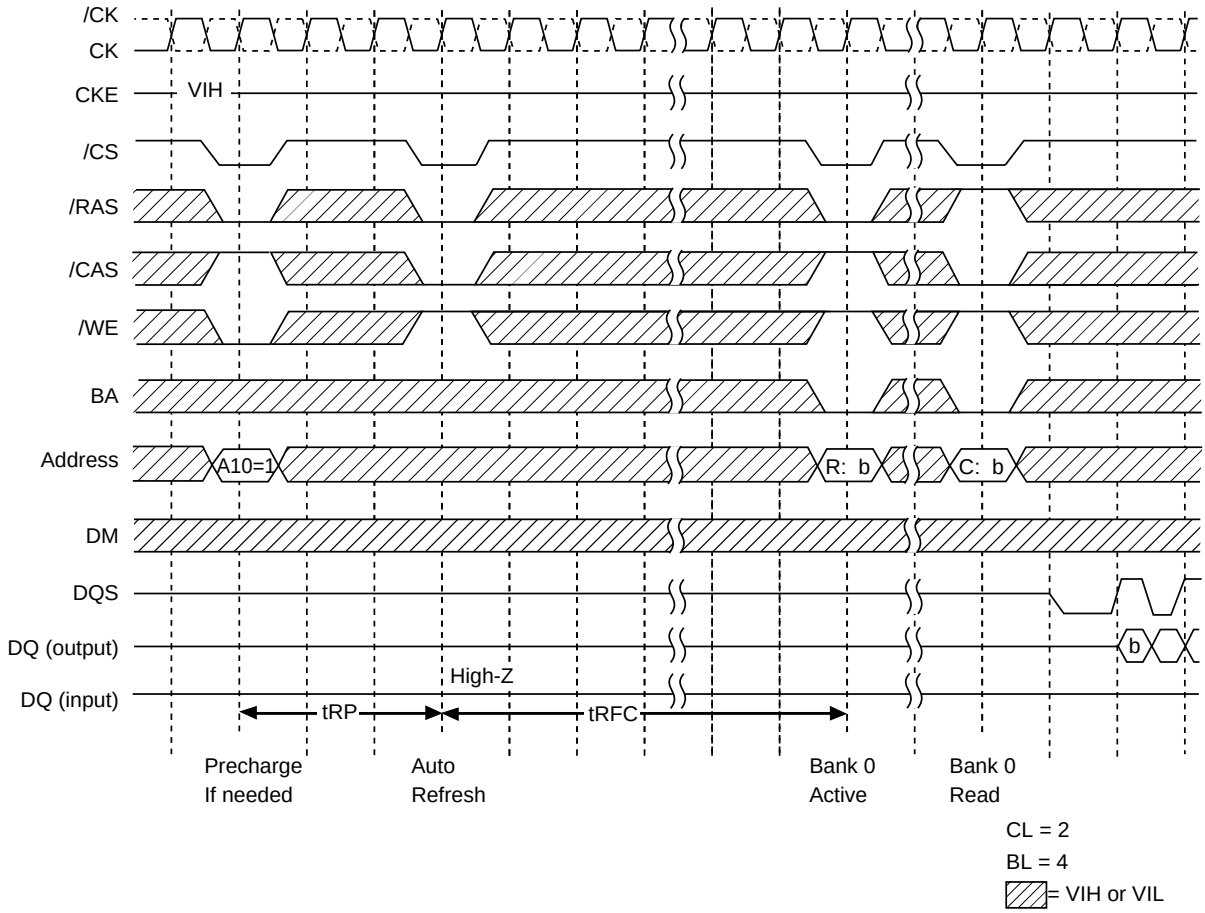

Self Refresh Cycle

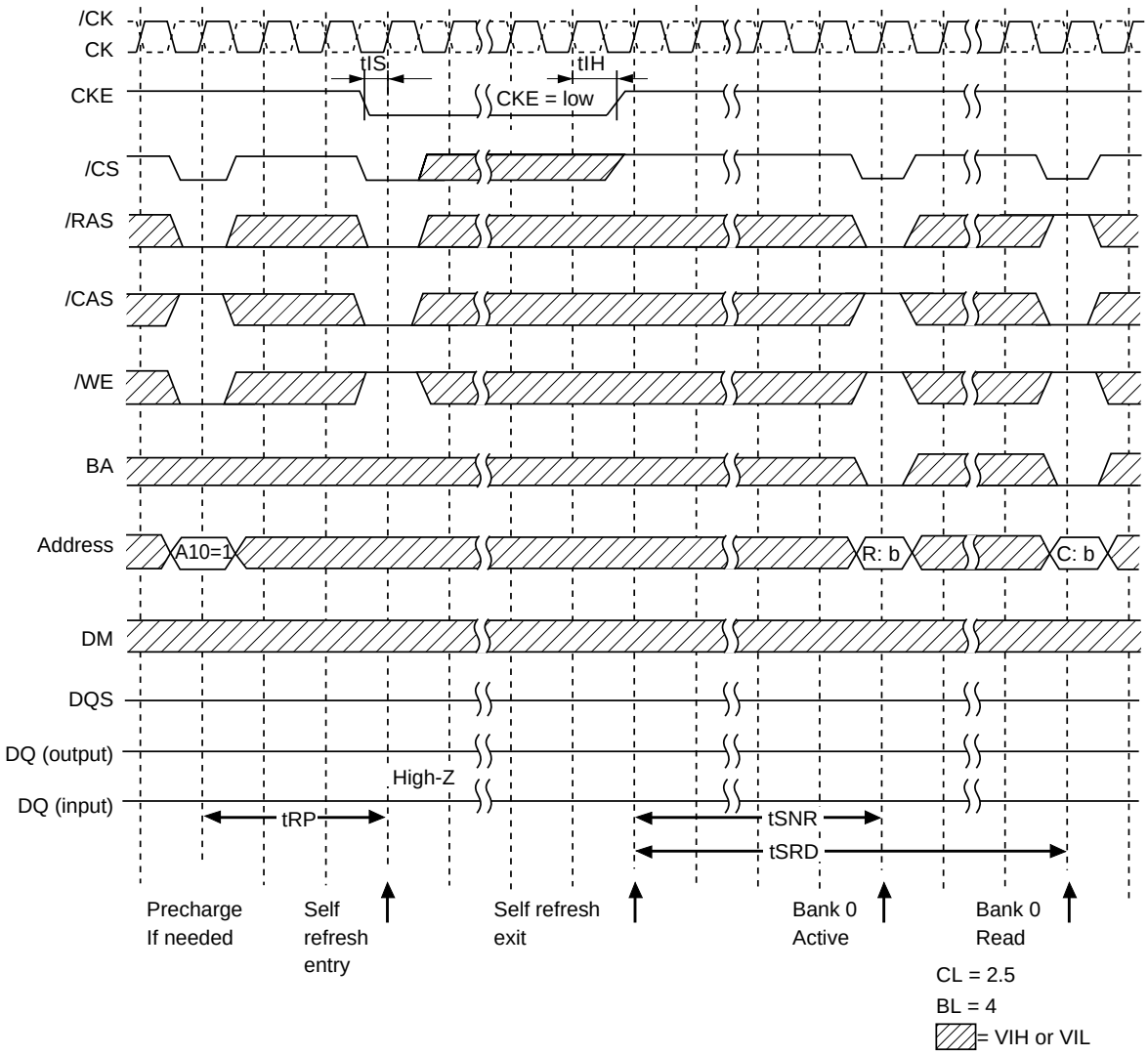

Package Drawing

66-pin Plastic TSOP (II)

Solder plating: Lead free (Sn-Bi)

Unit: mm

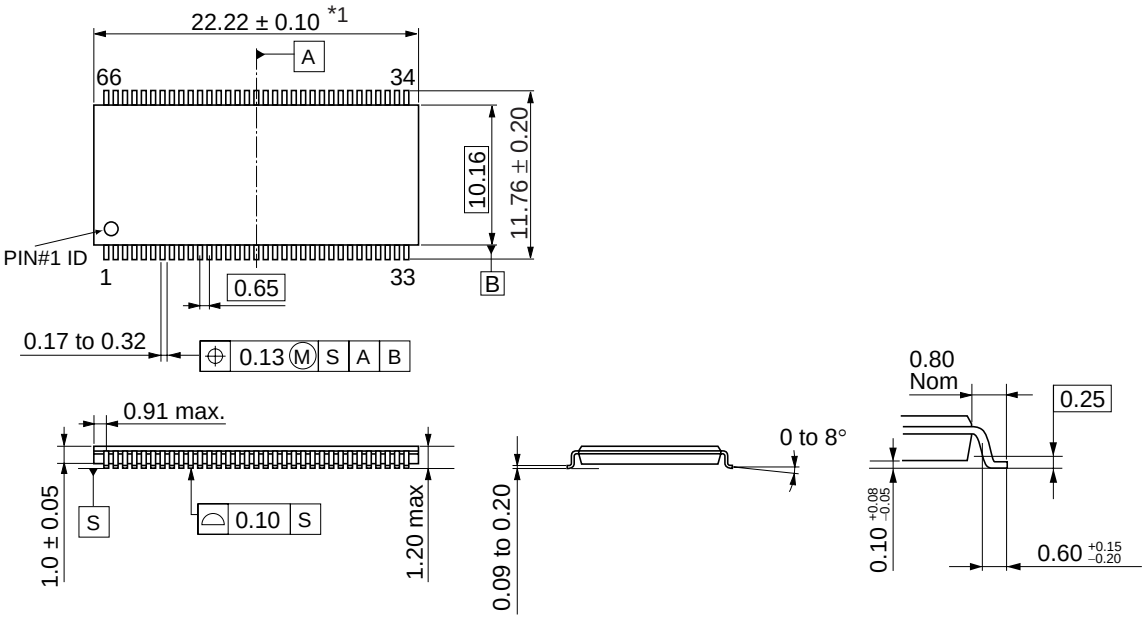

Note: This dimension does not include mold flash, protrusions or gate burrs. Mold flash, protrusions or gate burrs shall not exceed 0.20mm per side.

ECA-TS2-0143-01

Recommended Soldering Conditions

Please consult with our sales offices for soldering conditions of the EDD1216AATA.

Type of Surface Mount Device

EDD1216AATA: 66-pin Plastic TSOP (II) < Lead free(Sn-Bi) >

NOTES FOR CMOS DEVICES

① PRECAUTION AGAINST ESD FOR MOS DEVICES

Exposing the MOS devices to a strong electric field can cause destruction of the gate oxide and ultimately degrade the MOS devices operation. Steps must be taken to stop generation of static electricity as much as possible, and quickly dissipate it, when once it has occurred. Environmental control must be adequate. When it is dry, humidifier should be used. It is recommended to avoid using insulators that easily build static electricity. MOS devices must be stored and transported in an anti-static container, static shielding bag or conductive material. All test and measurement tools including work bench and floor should be grounded. The operator should be grounded using wrist strap. MOS devices must not be touched with bare hands. Similar precautions need to be taken for PW boards with semiconductor MOS devices on it.

② HANDLING OF UNUSED INPUT PINS FOR CMOS DEVICES

No connection for CMOS devices input pins can be a cause of malfunction. If no connection is provided to the input pins, it is possible that an internal input level may be generated due to noise, etc., hence causing malfunction. CMOS devices behave differently than Bipolar or NMOS devices. Input levels of CMOS devices must be fixed high or low by using a pull-up or pull-down circuitry. Each unused pin should be connected to V_{DD} or GND with a resistor, if it is considered to have a possibility of being an output pin. The unused pins must be handled in accordance with the related specifications.

③ STATUS BEFORE INITIALIZATION OF MOS DEVICES

Power-on does not necessarily define initial status of MOS devices. Production process of MOS does not define the initial operation status of the device. Immediately after the power source is turned ON, the MOS devices with reset function have not yet been initialized. Hence, power-on does not guarantee output pin levels, I/O settings or contents of registers. MOS devices are not initialized until the reset signal is received. Reset operation must be executed immediately after power-on for MOS devices having reset function.

CME0107

The information in this document is subject to change without notice. Before using this document, confirm that this is the latest version.

No part of this document may be copied or reproduced in any form or by any means without the prior written consent of Elpida Memory, Inc.

Elpida Memory, Inc. does not assume any liability for infringement of any intellectual property rights (including but not limited to patents, copyrights, and circuit layout licenses) of Elpida Memory, Inc. or third parties by or arising from the use of the products or information listed in this document. No license, express, implied or otherwise, is granted under any patents, copyrights or other intellectual property rights of Elpida Memory, Inc. or others.

Descriptions of circuits, software and other related information in this document are provided for illustrative purposes in semiconductor product operation and application examples. The incorporation of these circuits, software and information in the design of the customer's equipment shall be done under the full responsibility of the customer. Elpida Memory, Inc. assumes no responsibility for any losses incurred by customers or third parties arising from the use of these circuits, software and information.

[Product applications]
Elpida Memory, Inc. makes every attempt to ensure that its products are of high quality and reliability. However, users are instructed to contact Elpida Memory's sales office before using the product in aerospace, aeronautics, nuclear power, combustion control, transportation, traffic, safety equipment, medical equipment for life support, or other such application in which especially high quality and reliability is demanded or where its failure or malfunction may directly threaten human life or cause risk of bodily injury.

[Product usage]
Design your application so that the product is used within the ranges and conditions guaranteed by Elpida Memory, Inc., including the maximum ratings, operating supply voltage range, heat radiation characteristics, installation conditions and other related characteristics. Elpida Memory, Inc. bears no responsibility for failure or damage when the product is used beyond the guaranteed ranges and conditions. Even within the guaranteed ranges and conditions, consider normally foreseeable failure rates or failure modes in semiconductor devices and employ systemic measures such as fail-safes, so that the equipment incorporating Elpida Memory, Inc. products does not cause bodily injury, fire or other consequential damage due to the operation of the Elpida Memory, Inc. product.

[Usage environment]
This product is not designed to be resistant to electromagnetic waves or radiation. This product must be used in a non-condensing environment.

If you export the products or technology described in this document that are controlled by the Foreign Exchange and Foreign Trade Law of Japan, you must follow the necessary procedures in accordance with the relevant laws and regulations of Japan. Also, if you export products/technology controlled by U.S. export control regulations, or another country's export control laws or regulations, you must follow the necessary procedures in accordance with such laws or regulations.
If these products/technology are sold, leased, or transferred to a third party, or a third party is granted license to use these products, that third party must be made aware that they are responsible for compliance with the relevant laws and regulations.

M01E0107