ECX-64A/64C SMD QUARTZ CRYSTAL

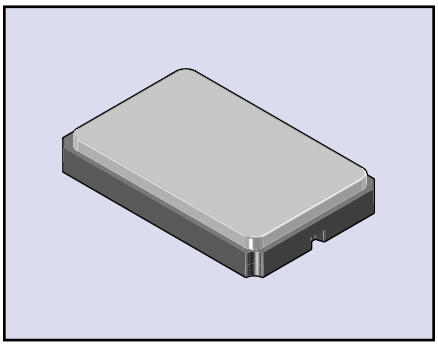

The ECX-64A and ECX-64C are subminiature SMD crystals with 3.5 X 6 mm footprint. The cost effective all ceramic package is available in 2 and 4 pad versions. The package height measures 1.1 mm max. which is ideal for densely populated PCB applications.

FEATURES

- **Compact and low profile**
- **Glass sealed ceramic package**
- **Tape & Reel (1,000 pcs)**

PART NUMBERING GUIDE *"EXAMPLE"*

MANUFACTURER		FREQUENCY (16.0000 MHz)		LOAD CAPACITANCE*		PACKAGE TYPE**
ECS	–	160	–	20	–	23A

** Load capacitance (xx=xx pF, S=series resonance). **Package Type Examples (23A=ECX-64A, 23C=ECX-64C)*
Note: See Product Selection Guide for additional options including tighter tolerances or extended temperature range.

OPERATING CONDITIONS/ELECTRICAL CHARACTERISTICS

PARAMETERS	CONDITIONS	MINIMUM	TYPICAL	MAXIMUM	UNITS
FREQUENCY RANGE		12.600		100.000	MHz
CALIBRATION TOLERANCE	@ +25˚C			±30*	PPM
FREQUENCY STABILITY ref @25˚C	-10 ~ +70˚C			±50*	PPM
SHUNT CAPACITANCE				7	pF
LOAD CAPACITANCE	C_L (Customer Specified)	10	16.0 standard	Series	pF
DRIVE LEVEL	DL			100	µW
OPERATING TEMPERATURE	TOPR**	-10		+70	˚C
STORAGE TEMPERATURE	TSTG	-40		+85	˚C
AGING CHARACTERISTICS (Per Year)	@ +25˚C ± 3˚C per year			±5	PPM

** Tighter specifications are available. **Extended temperature range available.*

EQUIVALENT SERIES RESISTANCE / MODE OF OSCILLATION

FREQUENCY RANGE (MHz)	MODE OF OSC	MAX ESR Ω	FREQUENCY RANGE (MHz)	MODE OF OSC	MAX ESR Ω
12.600 ~ 15.999	Fundamental	80	20.000 ~ 49.999	Fundamental	40
16.000 ~ 19.999	Fundamental	60	50.000 ~ 100.000	3rd O/T	100

PACKAGE DIMENSIONS (mm)

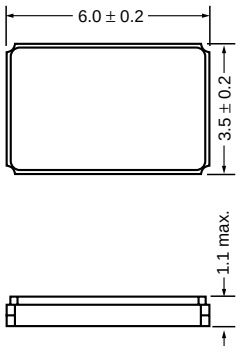

Figure 1) ECX-64A &64C - Top and side views

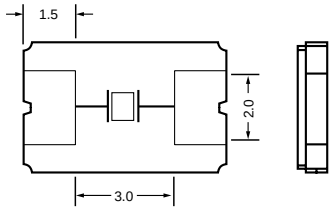

Figure 2) ECX-64A - Pad Configuration
Bottom and End views

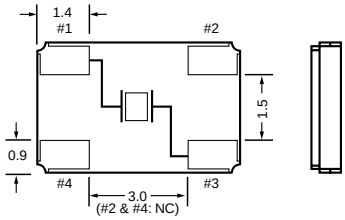

Figure 3) ECX-64C - Pad Configuration
Bottom and End views

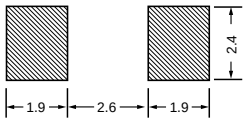

Figure 4) ECX-64A - Recommended
Solder Pad Layout

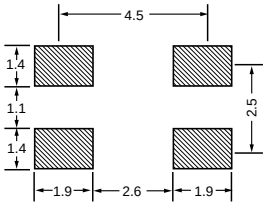

Figure 5) ECX-64C - Recommended
Solder Pad Layout