ECX-3TAX MICRO MINIATURE SMD TUNING FORK CRYSTAL

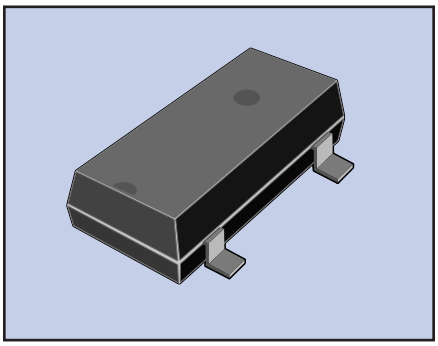

The ECX-3TAX is a 2.0 mm low profile ruggedized thermoplastic molded 32.768KHz SMD tuning fork crystal. This crystal is excellent for SMD applications with limited circuit board space requirements.

FEATURES

- Low profile 2.0 mm maximum height
- Industry standard footprint
- Long term stability
- Excellent shock resistance
- Excellent environmental characteristics
- Tape & Reel (3,000 pcs)
- RoHS Compliant w/exemption for Pb in High Temp Solder

Discontinued

PART NUMBERING GUIDE "EXAMPLE"

MANUFACTURER		FREQUENCY		LOAD CAPACITANCE		PACKAGE TYPE
ECS	–	.327	–	12.5	–	24X

OPERATING CONDITIONS/ELECTRICAL CHARACTERISTICS

PARAMETERS		ECX-3TA	UNITS
NOMINAL FREQUENCY	Fo	32.768	KHz
LOAD CAPACITANCE	C_L	12.5 Standard (6.0 Optional)	pF
DRIVE LEVEL	D_L	1.0 max.	µW
CALIBRATION TOLERANCE	@ +25˚C	±20	PPM
EQUIVALENT SERIES RESISTANCE	R_1	50 max.	K Ω
TEMPERATURE COEFFICIENT		-0.040 PPM/˚C^2 max.	PPM/(ΔC˚)
OPERATING TEMPERATURE RANGE	T_{OPR}	-10 ~ +60	˚C
MAX. OPERATING TEMPERATURE RANGE		-40 ~ +85	˚C
Q FACTOR	Q	50,000 min.	
TURNOVER TEMPERATURE	T_O	+25 ± 5	˚C
STORAGE TEMPERATURE RANGE	T_{STG}	-55 ~ +125	˚C
INSULATION RESISTANCE	IR	500MΩ min./ DC 100V	MΩ
SHUNT CAPACITANCE	C_o	2.0 typical	pF
MOTIONAL CAPACITANCE	C_1	0.003 pF typical	pF
AGING (FIRST YEAR)	Δf/fo	±3 PPM max. @ +25˚C	PPM

PACKAGE DIMENSIONS (mm)

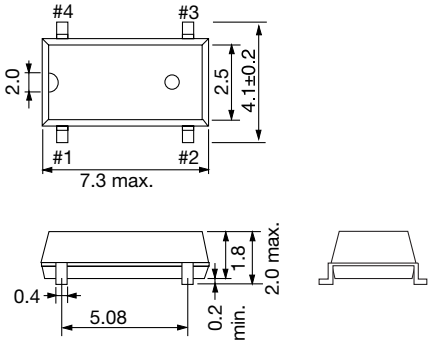

Figure 1) ECX-3TA – Top, Side and End views

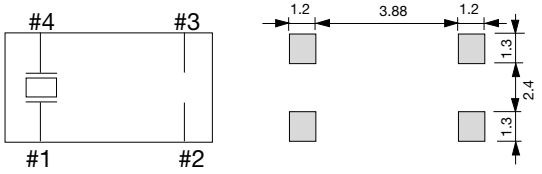

Figure 2) ECX-3TA – Land Pattern - Top view

RECOMMENDED OSCILLATION CIRCUIT

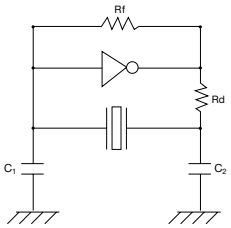

ELECTRICAL CHARACTERISTICS

IC: TC 4069P
Rf: 10MΩ
Rd: 330KΩ (As required)
C_1 = 22pF, C_2 = 22pF
V_{DD} = 3.0V

In this circuit, low drive level with a maximum of 1µW is recommended. If excessive drive is applied, irregular oscillation or quartz element fractures may occur.

PARABOLIC TEMPERATURE CURVE

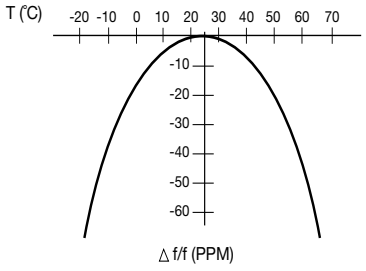

To determine frequency stability, use parabolic curvature. For example: What is the stability at 45˚C?

1) Change in T (˚C) = 45 -25 = 20˚C
2) Change in frequency = -0.04 PPM x (ΔT) ^{2}
= -0.04 PPM x (20) ^{2}
= -16.0 PPM