- Low Profile
- 2 x 1.2 mm Footprint
- Extended Temp. Range
- 0.388 mm Height
- RoHS 2 Compliant

ECX-12L

SMD TUNING FORK CRYSTAL

The ultra-miniature ECX-12L is a very compact SMD Tuning Fork Crystal. The 2.0 x 1.2 x 0.38 mm ceramic package is ideal for today's SMD manufacturing environment.

OPERATING CONDITIONS / ELECTRICAL CHARACTERISTICS

PARAMETERS	CONDITIONS	ECX-12L			UNITS
		MIN	TYP	MAX	
Frequency	F_O		32.768		KHz
Frequency Tolerance	@ +25°C			± 20	ppm
Load Capacitance	Specify in P/N		12.5		pF
Drive Level	D_L			0.5	µW
Equivalent Series Resistance	R_1			100K	Ω
Motional Capacitance			7.0		fF
Turnover Temperature		+20	+25	+30	°C
Temperature Coefficient		-0.02	-0.03	-0.04	ppm/°C²
Shunt Capacitance	C_o		1.3		pF
First Year Aging	+25°C ±3°C			± 3	ppm
Operating Temperature	T_{opr}	-40		+85	°C
Storage Temperature	Tstg	-55		+125	°C

TOP, BOTTOM, SIDE VIEWS & LAND PATTERN

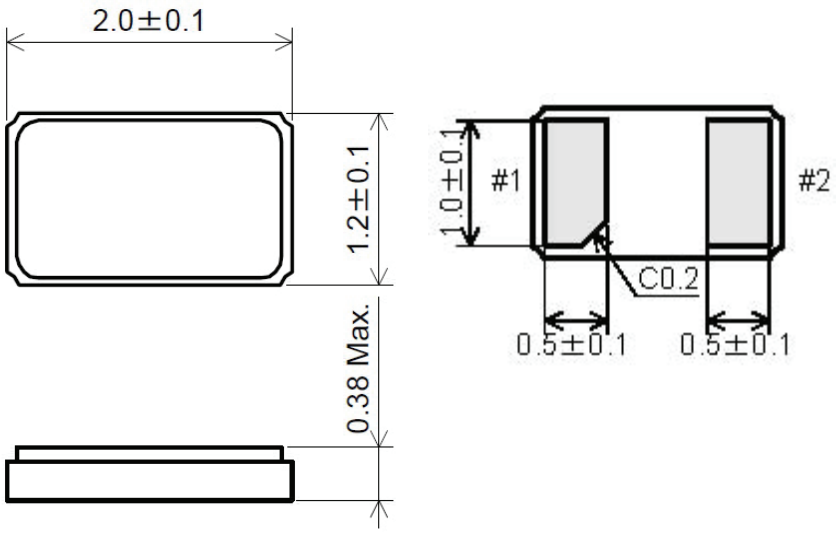

Figure 1) Top, Side and Bottom View

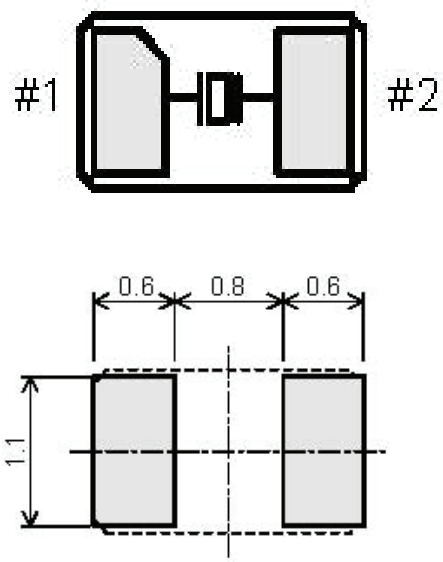

Figure 2) Crystal connection and Suggested Land

PART NUMBERING GUIDE: Example ECS-.327-12.5-12L-TR

ECS - Frequency Abbreviation - Load Capacitance - Package Type - Packaging

Frequency Abbreviation	Load Capacitance	Package Type	Packaging
.327 = 32.768 KHz	12.5 = 12.5 pF 9 = 9 pF 7= 7 pF	-12L = ECX-12L	-TR = Tape & Reel 3K/Reel

1105 South Ridgeview Road • Olathe, KS 66062 • Phone: 913.782.7787 • Fax: 913.782.6991 • www.ecsxtal.com