ECN3064

ECN3064 is monolithic IC integrating 6 IGBTs.
It can be applied to DC brushless motors and Induction motors.

Functions

* Integrated charge pump circuit
* Free Wheeling Diodes are integrated
* Overcurrent Protection circuit is integrated

Features

* PWM control of upper and bottom arm IGBTs are possible by controlling outer Microprocessor
* 6 Logic inputs are compatible with 5V CMOS or LSTTL outputs
* Upper and Bottom arm IGBTs can operate in 20kHz chopping frequency
* For converted AC200 to 230 V power supplies

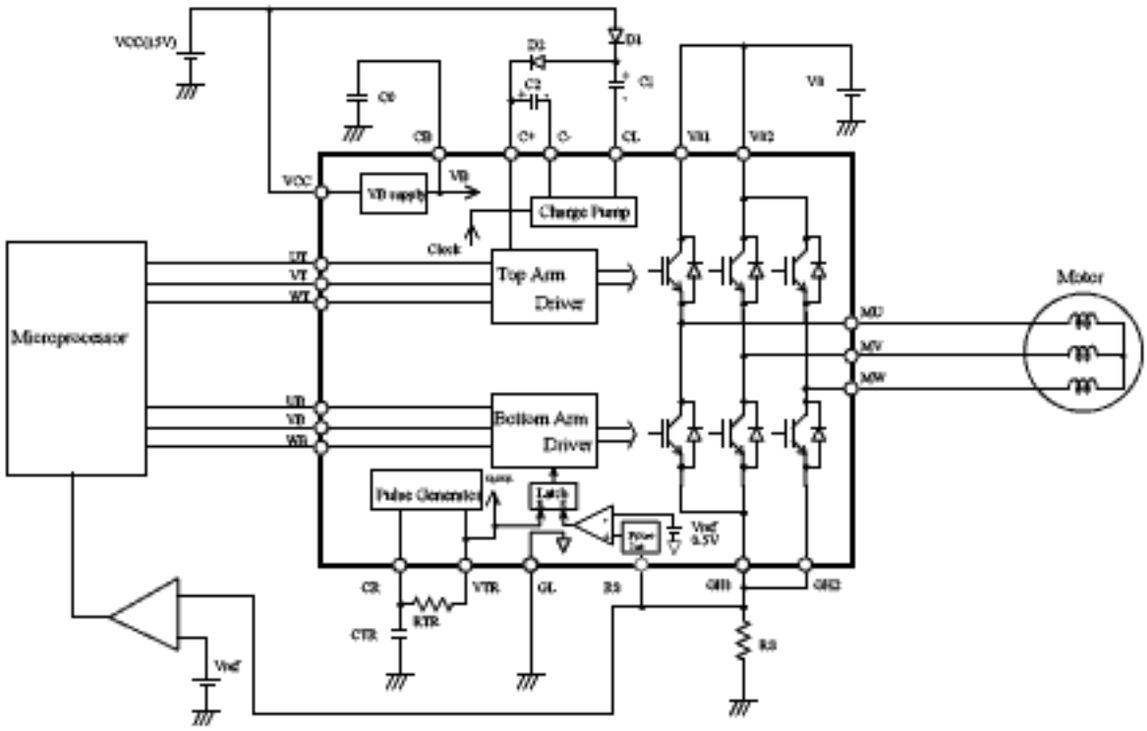

Fig.1 Block Diagram

ECN3064

1. General

(1) Type ECN3064SP, ECN3064SPV,ECN3064SPR
(2) Application 3-Phase DC Brushless Motor and Induction Motor
(3) Structure Monolithic IC
(4) Package SP-23TA, SP-23TB, SP-23TR

2. Maximum Allowable Ratings (Ta=25 °C)

No.	Items	Symbols	Terminal	Ratings	Unit	Condition
1	Output Device Breakdown Voltage	VSM	VS1,VS2 MU,MV,MW	500	V	
2	Supply Voltage	VCC	VCC	18	V	
3	Input Voltage	VIN	UT,VT,WT, UB,VB,WB	-0.5~ VB+0.5	V	
4	Output Current	IMDC	MU,MV,MW	0.7	A	
5	Peak Output Current	IMP	MU,MV,MW	1.5	A	Note 1
6	Output Current in Start Up and Accelerating	IOM	MU,MV,MW	1.5	A	Note 1
7	Operating Junction Temperature	Tjop		-20 ~ +125	°C	Note 2
8	Storage Temperature	Tstg		-40 ~ +150	°C	

Note 1. Please note that acumulated duty of a period exceeding 0.7A has to be less than 5% of total current flowing period.

Note 2. Thermal Resistance
Rj-c = 4 °C /W
Rj-a = 40 °C /W

3. Recommended Operating Conditions

No.	Items	Symbols	Terminal	MIN	TYP	MAX	Unit	Condition
1	Supply Voltage	VS	VS1,VS2	50	325	400	V	
2		VCC	VCC	13.5	15	16.5	V	

Note 1. Recommended Safe Operating Area(SOA)
It is recommended that this IC is used within the SOA as shown below where IM and VM are the current and the voltage at the terminal of motor wiring at the change of phase (turn off).

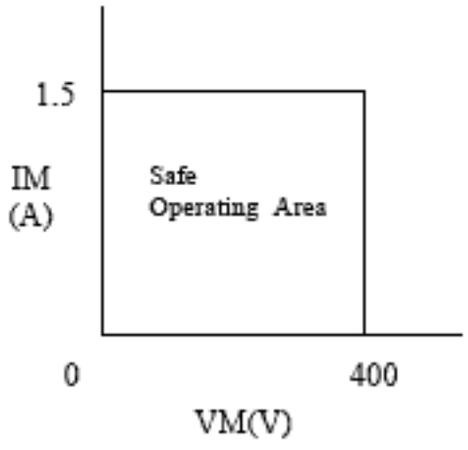

4. Electrical Characteristics (Ta=25 °C)

Unless otherwise specified, VCC=15V, VS=325V

Suffix T; Top arm B; Bottom arm

No.	Items	Symbols	Terminal	MIN	TYP	MAX	Unit	Condition
1	Standby Current	IS	VS1,VS2	-	0.5	1.5	mA	UT,VT,WT,UB,VB,
2		ICC	VCC	-	10	20	mA	WB=0V
3	Output device FVD	VFT	MU,MV, MW	-	2.2	3.0	V	I=0.35A
4		VFB	MU,MV, MW	-	2.2	3.0	V	I=0.35A
5	Turn On	TdONT	MU,MV, MW	-	1.0	2.0	µs	
6	Delay Time	TdONB	MU,MV, MW	-	1.0	2.0	µs	I=0.35A
7	Turn Off	TdOFFT	MU,MV, MW	-	1.0	2.0	µs	Resistive Load
8	Delay Time	TdOFFB	MU,MV, MW	-	1.0	2.0	µs	
9	Diode FVD	VFDT	MU,MV, MW	-	2.2	2.8	V	I=0.35A
10		VFDB	MU,MV, MW	-	2.4	3.0	V	
11	Input Voltage	VIH	UT,VT,WT,	3.5	-	-	V	
12		VIL	UB,VB,WB	-	-	1.5	V	
13	Input Current	IIH	UT,VT,WT, UB,VB,WB	-	-	100	µA	Input=5V Note 1 Pull Down Resistance
14	VB Output Voltage	VB	CB	6.8	7.5	8.2	V	
15	VB Output Current	IB	CB	25	-	-	mA	deltaVLoad=0.1V
16	Reference Voltage for Overcurrent	Vref	RS	0.45	0.5	0.55	V	
17	LVSD Output Voltage	LVSDON	VCC,MU, MV,MW	10.0	11.5	12.9	V	Note.2
18	LVSD recover Voltage	LVSDOFF		10.1	12.0	13.0	V	
19	LVSD reset hysterisis	Vrh		0.1	0.5	0.9	V	

Note 1. Pull Down Resistance are typically 200 kΩ.
Note 2. LVSD : Low Voltage Shut Down

5. Function

5.1 Truth Table

Terminal	Input	Output
UT,VT,WT,	L	OFF
UB,VB,WB	H	ON
UT,UB	UT&UB=H	OFF
VT,VB	VT&VB=H	OFF
WT,WB	WT&WB=H	OFF

5.2 Timing Chart

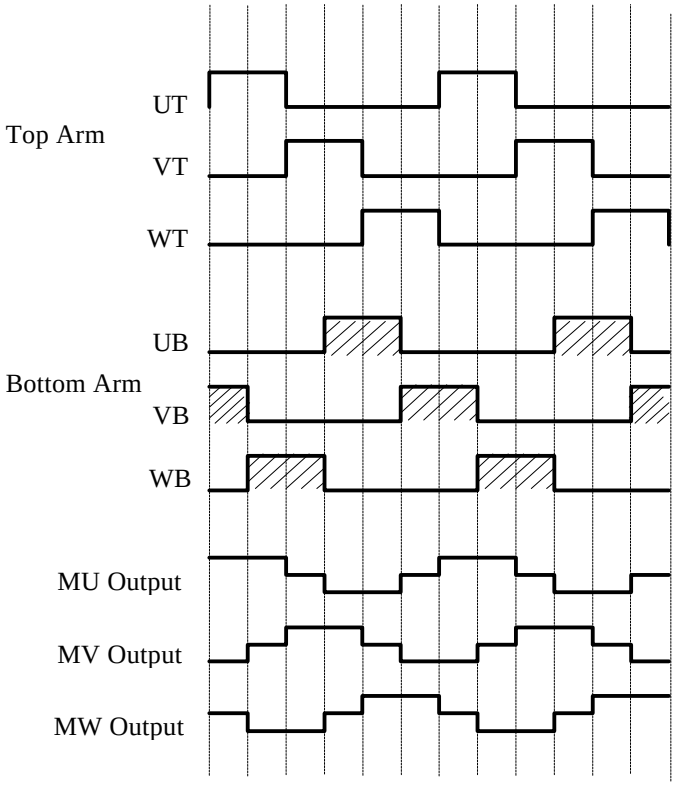

Example of DC Brushless motor drive

5.3 Overcurrent Limiting Operation

This IC detects overcurrent by outside resistance Rs. When Rs input voltage exceeds inner reference voltage Vref(0.5V typical), this IC turns off the bottom output. After overcurrent detection, a reset operation is done at each inner clock signal period.

In case of not using this function, please connect Rs terminal to GL terminal.

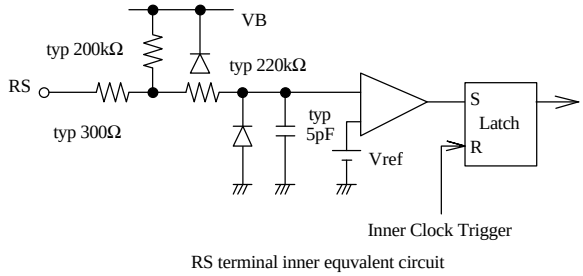

RS terminal inner equvalent circuit

6. Standard Application

Component	Recommended Value	Usage	Remark
C0	More than 0.22 uF	for inner power supply(VB).	stress voltage is VB
C1,C2	1.0 uF +/- 20%	for charge pump	stress voltage is VCC
D1,D2	Hitachi DFG1C6(Glass mold type), DFM1F6 (Resin mold type) or considerable parts	For charge pump	600V/1.0A trr ≤ 100ns
CTR	1800 pF +/- 5%	for clock	Note 1.
RTR	22 k-ohm +/- 5%	for clock	Note 1.

Note 1. Clock frequency is determined approximately by next equation.
Floating capacitance of PCB must be considered.
At Recommended Value of CR, the error factor of IC is about 10%.

fclock = -1 / (2C*R*Ln(1-3.5/5.5)) ; Ln is natural logarithm
= 0.494 / (C*R) (Hz)

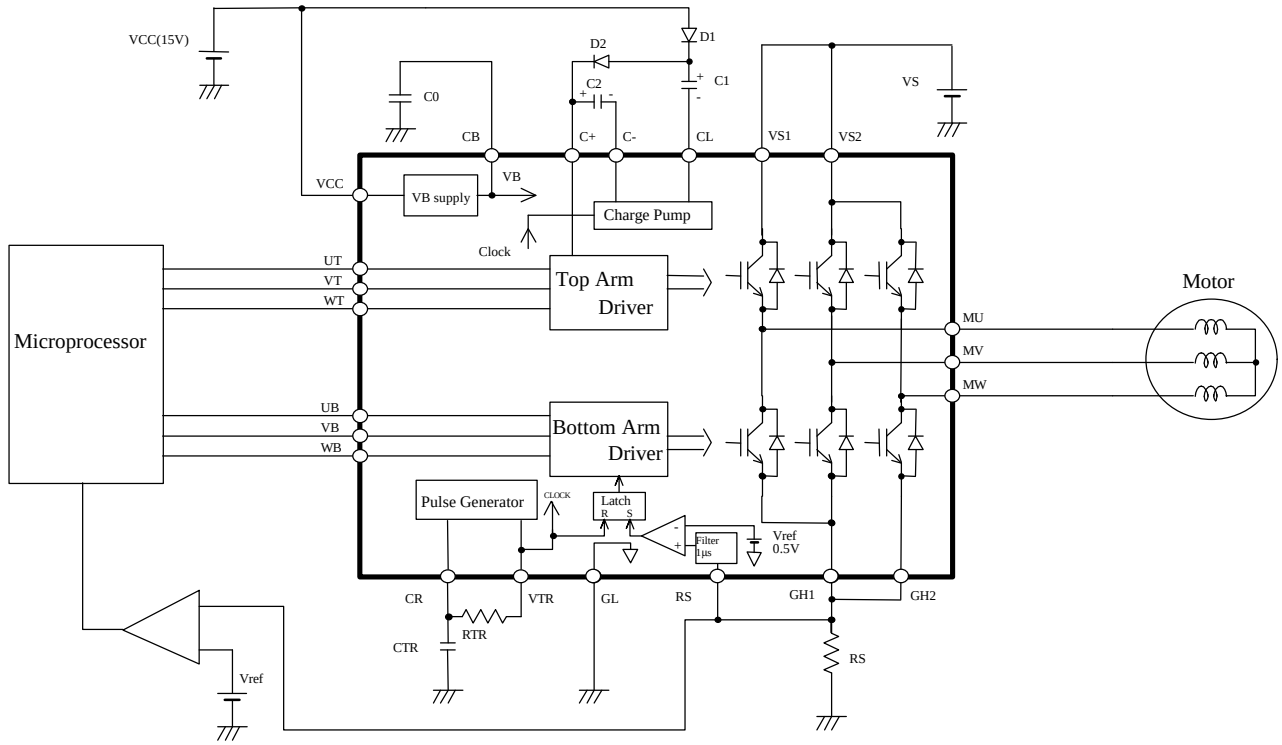

7. Terminal

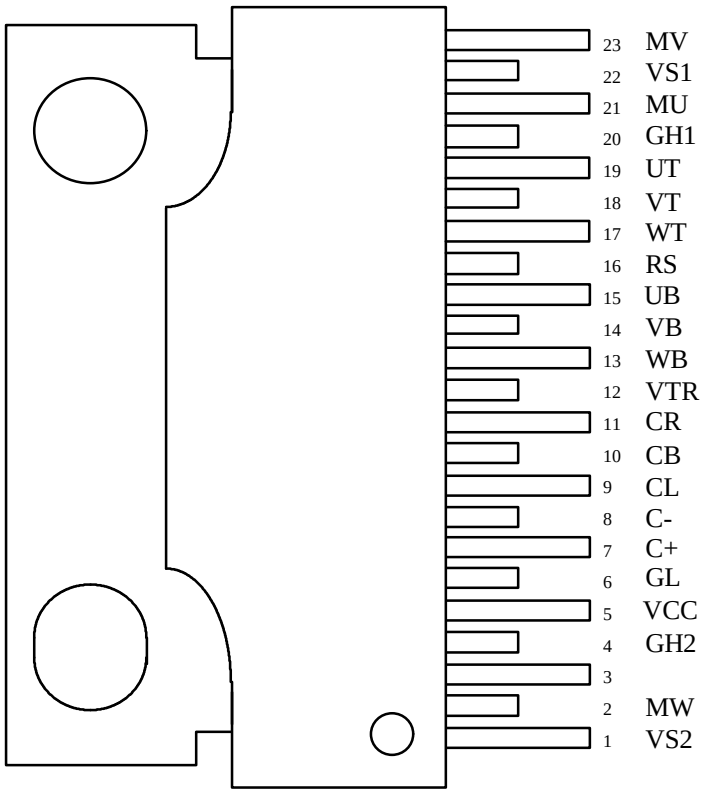

(Marking Side)

Fig.2 Pin Assignment

8. Package Outline

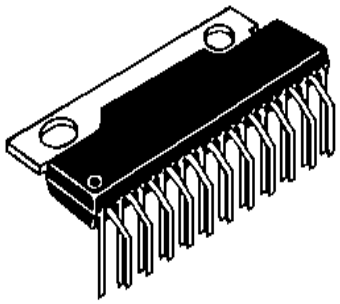

ECN3064SP
(SP-23TA)

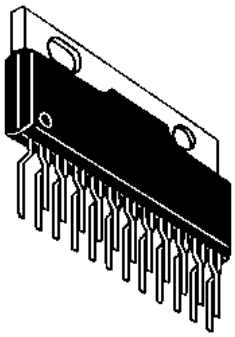

ECN3064SPV
(SP-23TB)

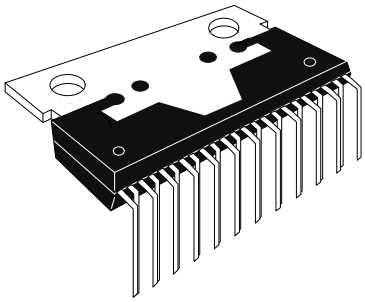

ECN3064 SPR
(SP-23TR)

9. Package Dimensions

(1) ECN3064SP (SP-23TA) (Unit:mm)

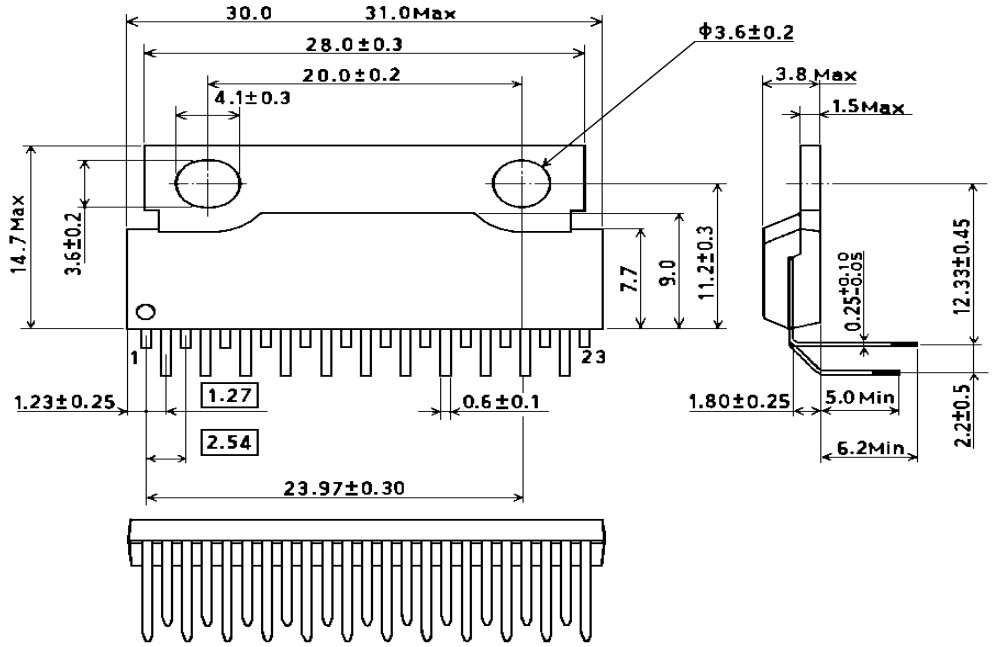

(2) ECN3064SPV (SP-23TB)

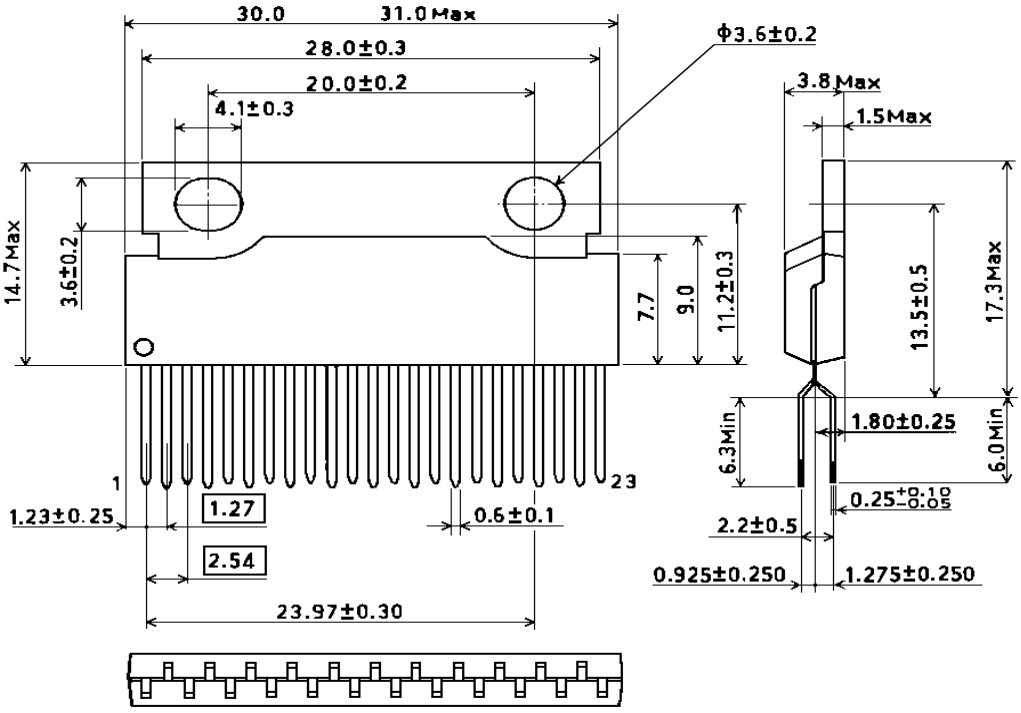

(3) ECN3064SPR (SP-23TR)

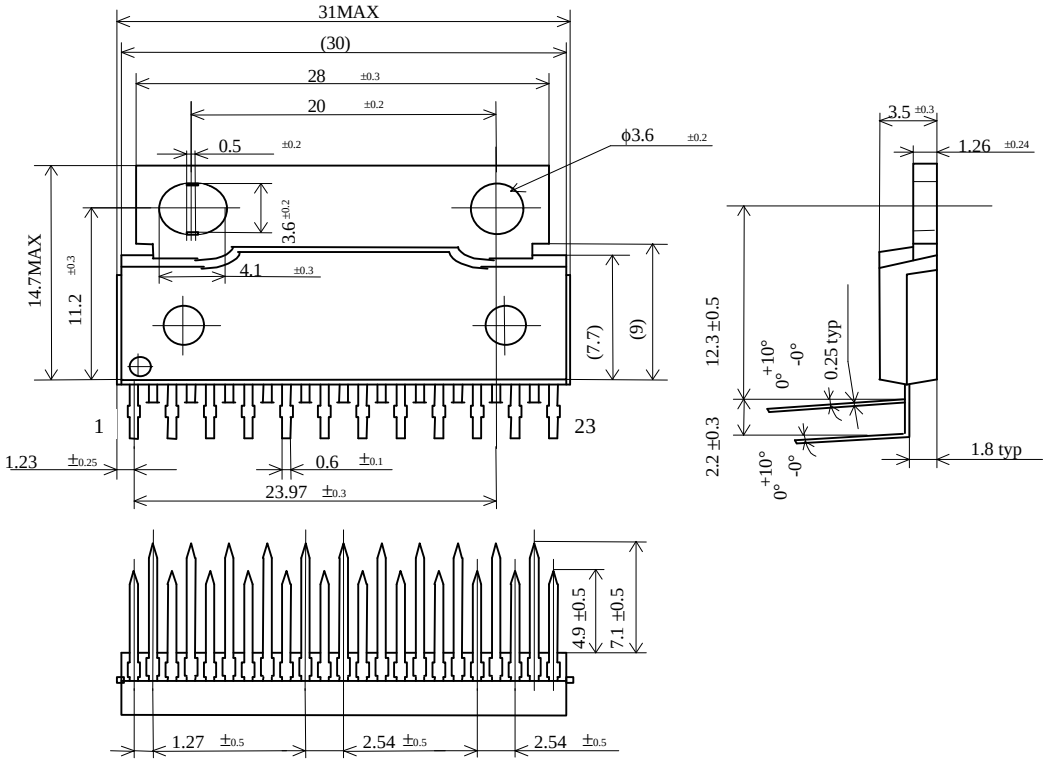

HITACHI POWER SEMICONDUCTORS

Notices

1. The information given herein, including the specifications and dimensions, is subject to change without prior notice to improve product characteristics. Before ordering, purchasers are adviced to contact Hitachi sales department for the latest version of this data sheets.
2. Please be sure to read "Precautions for Safe Use and Notices" in the individual brochure before use.
3. In cases where extremely high reliability is required(such as use in nuclear power control, aerospace and aviation, traffic equipment, life-support-related medical equipment, fuel control equipment and various kinds of safety equipment), safety should be ensured by using semiconductor devices that feature assured safety or by means of users' fail-safe precautions or other arrangement. Or consult Hitachi's sales department staff.
4. In no event shall Hitachi be liable for any damages that may result from an accident or any other cause during operation of the user's units according to this data sheets. Hitachi assumes no responsibility for any intellectual property claims or any other problems that may result from applications of information, products or circuits described in this data sheets.
5. In no event shall Hitachi be liable for any failure in a semiconductor device or any secondary damage resulting from use at a value exceeding the absolute maximum rating.
6. No license is granted by this data sheets under any patents or other rights of any third party or Hitachi, Ltd.
7. This data sheets may not be reproduced or duplicated, in any form, in whole or in part , without the expressed written permission of Hitachi, Ltd.
8. The products (technologies) described in this data sheets are not to be provided to any party whose purpose in their application will hinder maintenance of international peace and safety not are they to be applied to that purpose by their direct purchasers or any third party. When exporting these products (technologies), the necessary procedures are to be taken in accordance with related laws and regulations.

■ For inquiries relating to the products, please contact nearest overseas representatives which is located "Inquiry" portion on the top page of a home page.

Hitachi power semiconductor home page address http://www.hitachi.co.jp/pse

HITACHI