EClamp2455K
ESD/EMI Protection for SIM Card

PROTECTION PRODUCTS - EMIClamp™

Description

The EClamp™2455K is combination EMI filter and line termination device with integrated TVS diodes for use on SIM Card interfaces on cellular phones and other portable electronics. This state-of-the-art device utilizes solid-state silicon-avalanche technology for superior clamping performance and DC electrical characteristics.

The device consists of three circuits that include series impedance matching resistors for proper termination of the SIM card interface. Termination resistor value of 100 Ohms is included on the RST and Data lines and 47 Ohms on the CLK line. TVS diodes are also included on each line for ESD protection in excess of ±15kV (air discharge) and ±8kV (contact discharge) per IEC 61000-4-2, level 4. An additional TVS diode connection is included for protection of the voltage (Vcc) bus.

The EClamp2455K is in a 8-pin, RoHS/WEEE compliant, SLP1713P8 package. It measures 1.7 x 1.3 x 0.50mm. The leads are spaced at a pitch of 0.4mm and are finished with lead-free NiPdAu. The small package makes it ideal for use in portable electronics such as cell phones and digital still cameras.

Features

- Bidirectional EMI/RFI filter with integrated TVS for ESD protection
- ESD protection to **IEC 61000-4-2 (ESD) Level 4, ±15kV (air), ±8kV (contact)**
- TVS working voltage: 5V
- Termination Resistors: 100 Ohms & 47 Ohms
- Capacitance: 20pF (Typical at VR = 0V)
- Protection and filtering for four lines
- Solid-state technology

Mechanical Characteristics

- SLP1713P8 8-pin package
- RoHS/WEEE Compliant
- Nominal Dimensions: 1.7 x 1.3 x 0.50 mm
- Lead Pitch: 0.4mm
- Lead finish: NiPdAu
- Marking: Marking Code
- Packaging: Tape and Reel per EIA 481

Applications

- SIM Card
- Cell Phone
- PDAs and Smartphones

Pin Configuration

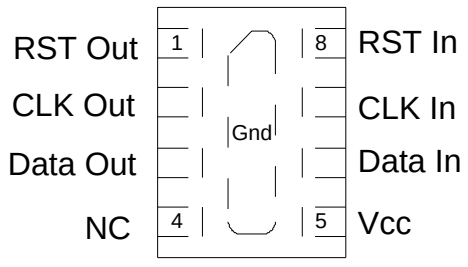

Pin Identification and Configuration (Top Side View)

Package Configuration

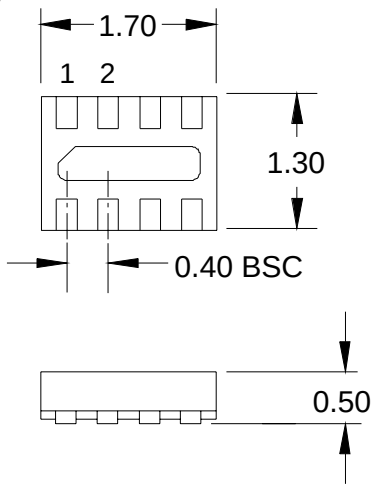

8 Pin SLP package (Bottom Side View) Nominal Dimensions in mm

Pin Identification and Configuration

Pin	Symbol	Identification
1, 8	RST	Reset input/output with termination resistor
2, 7	CLK	Clock input/output with termination resistor
3, 6	Data	Data input/output with termination resistor
4	NC	No Connect
5	Vcc	Power Supply ESD Protection
Center tab	GND	Ground connection

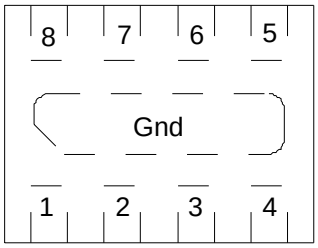

Pin Configuration (Top View)

Schematics & Component Values

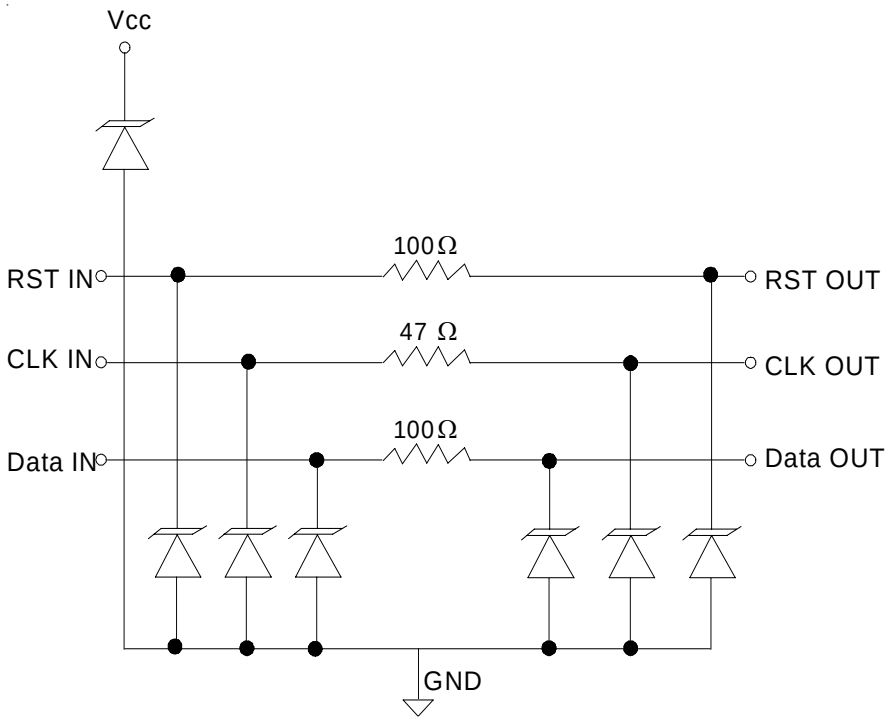

Maximum Ratings

Rating	Symbol	Value	Units
ESD per IEC 61000-4-2 (Air) ESD per IEC 61000-4-2 (Contact)	V_{ESD}	+/- 18 +/- 12	kV
Junction Temperature	T_J	125	°C
Operating Temperature	T_{op}	-40 to +85	°C
Storage Temperature	T_{STG}	-55 to +150	°C

Electrical Characteristics (T=25°C)

Parameter	Symbol	Conditions	Minimum	Typical	Maximum	Units
TVS Reverse Stand-Off Voltage	V_{RWM}				5	V
TVS Reverse Breakdown Voltage	V_{BR}	I_t = 1mA	6	8	10	V
TVS Reverse Leakage Current	I_R	V_{RWM} = 5.0V			0.5	µA
Reset Series Resistors	R_{RST}	Each Line	85	100	115	Ohms
Clk Series Resistors	R_{CLK}	Each Line	40	47	55	Ohms
Data Series Resistors	R_{DATA}	Each Line	85	100	115	Ohms
Total Capacitance	C_{in}	Input to Gnd, Each Line V_R = 0V, f = 1MHz	16	20	24	pF

Typical Characteristics

Typical Insertion Loss S21 (Pin 2 to 7)

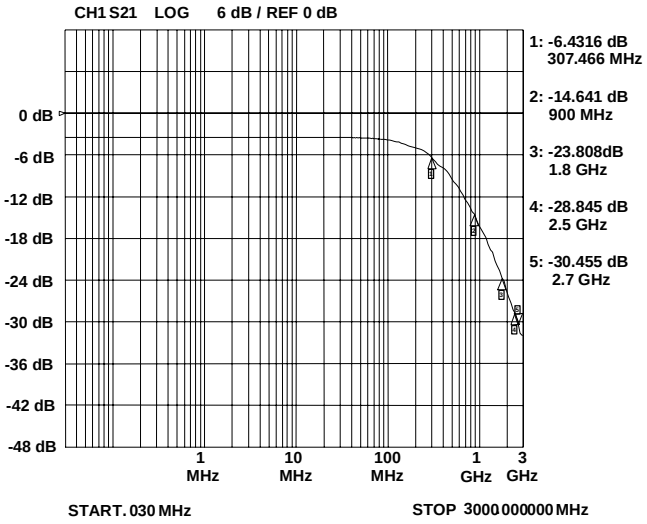

Typical Insertion Loss S21 (Pin 1 to 8 and Pin 3 to 6)

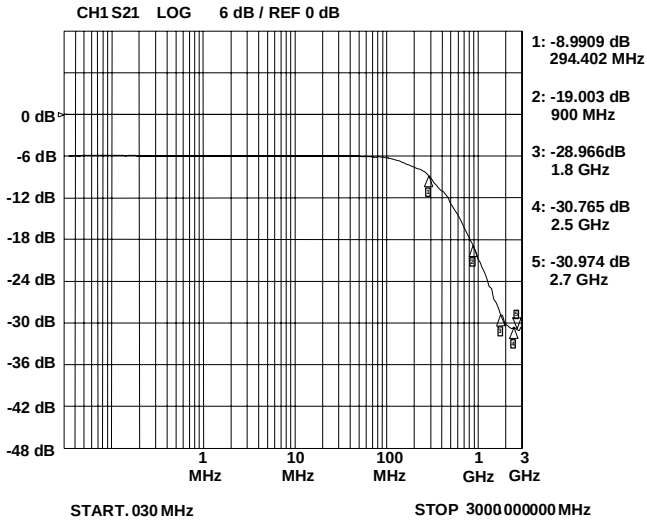

ESD Clamping (+8kV Contact)

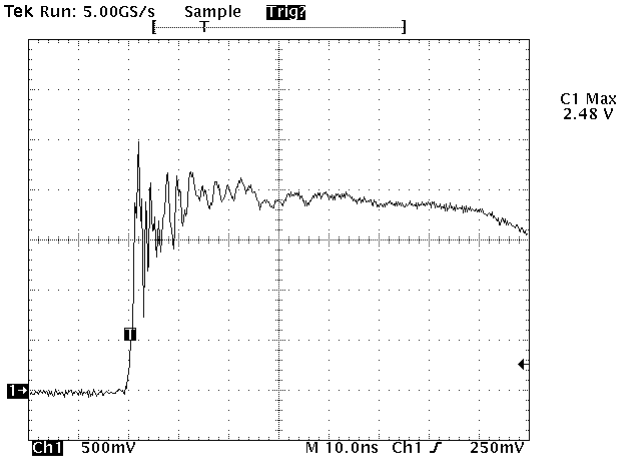

Note: Data is taken with a 10x attenuator

ESD Clamping (-8kV Contact)

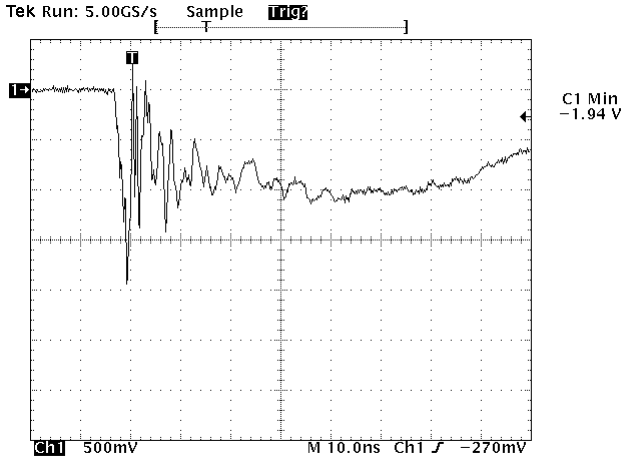

Note: Data is taken with a 10x attenuator

Normalized Capacitance vs. Reverse Voltage

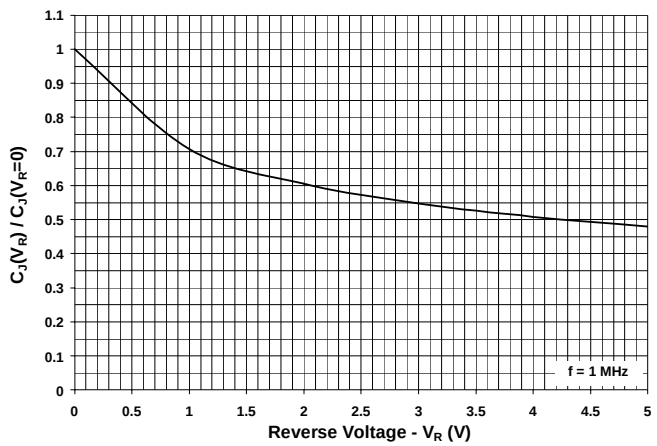

Analog Crosstalk (Each Line)

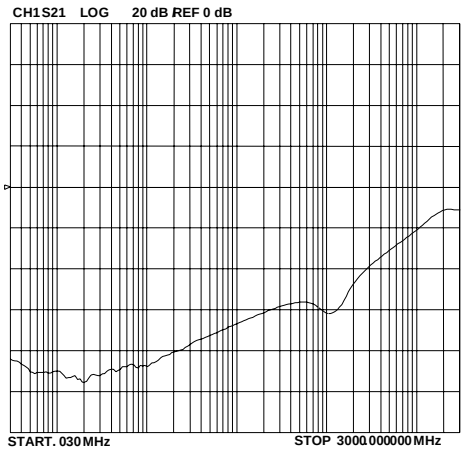

Device Connection

The EClamp2455K designed with ease of layout in mind. The package has flow through design which allows the designer to route the signals straight in and out between the SIM port connector and the SIM controller. The device is in a 8-pin SLP package. Electrical connection is made to the 8 pins located at the bottom of the device. A center tab serves as the ground connection. Pin connections are noted in Figure 1. All path lengths should be kept as short as possible to minimize the effects of parasitic inductance in the board traces.

Figure 1 - Pin Identification and Configuration (Top Side View)

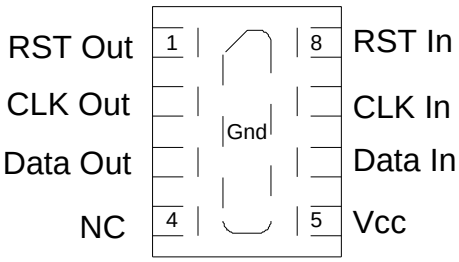

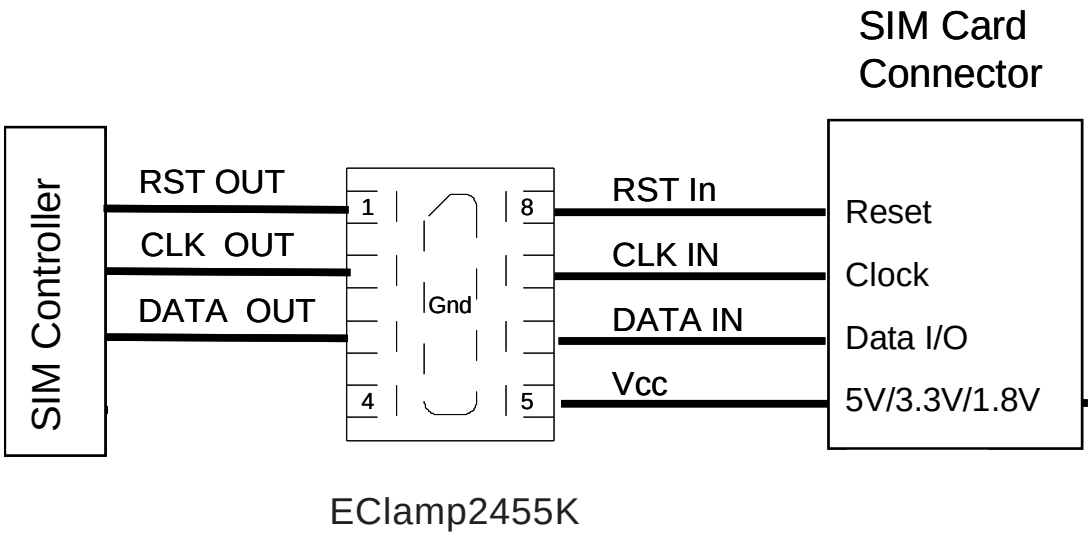

Figure 2 - SIM Protection

Applications Information - Spice Model

EClamp2455K Spice Model & Parameters

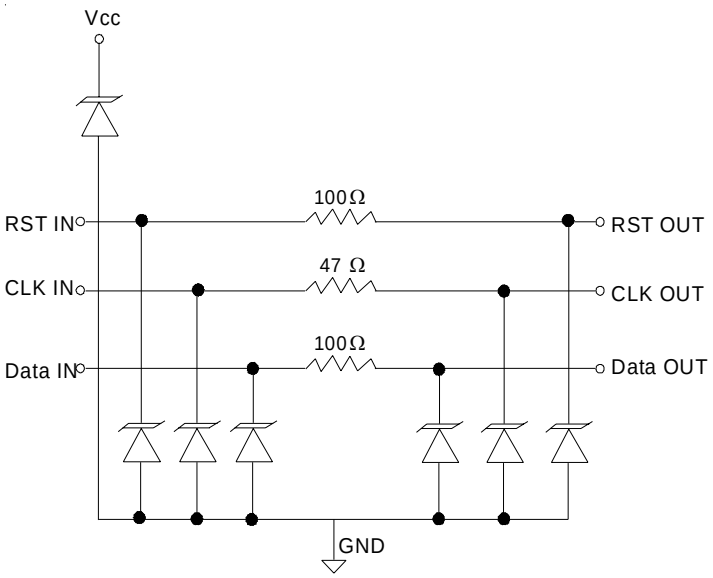

EClamp2455K Spice Model

Note: All TVS shown in the circuit use D1 Parameters

Table 1 - EClamp2455K Spice Parameters

Parameter	Unit	D1 (TVS)
IS	Amp	2E-15
BV	Volt	7.5
VJ	Volt	0.775
RS	Ohm	1.05
IBV	Amp	1E-3
CJO	Farad	9E-12
TT	sec	2.541E-9
M	--	0.246
N	--	1.1
EG	eV	1.11

Outline Drawing - SLP1713P8

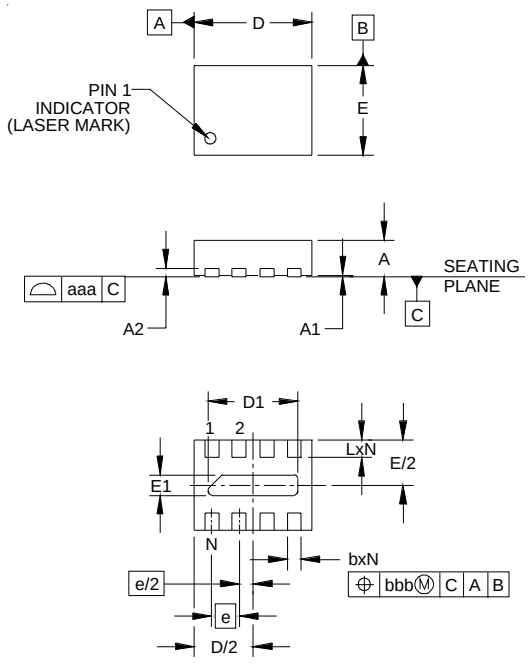

DIMENSIONS						
DIM	INCHES			MILLIMETERS		
	MIN	NOM	MAX	MIN	NOM	MAX
A	.018	.020	.022	0.45	0.50	0.55
A1	.000	.001	.002	0.00	0.02	0.05
A2		(.005)			(0.13)	
b	.006	.008	.010	0.15	0.20	0.25
D	.065	.067	.070	1.65	1.70	1.775
D1	.047	.051	.055	1.20	1.30	1.40
E	.049	.051	.054	1.25	1.30	1.375
E1	.008	.012	.016	0.20	0.30	0.40
e		.016 BSC			0.40 BSC	
L	.008	.010	.012	0.20	0.25	0.30
N		8			8	
aaa		.003			0.08	
bbb		.004			0.10	

NOTES:
1. CONTROLLING DIMENSIONS ARE IN MILLIMETERS (ANGLES IN DEGREES).
2. COPLANARITY APPLIES TO THE EXPOSED PAD AS WELL AS THE TERMINALS.

Land Pattern - SLP1713P8

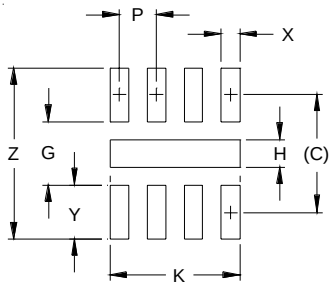

DIMENSIONS		
DIM	INCHES	MILLIMETERS
C	(.050)	(1.27)
G	.027	0.69
H	.012	0.30
K	.055	1.40
P	.016	0.40
X	.008	0.20
Y	.023	0.58
Z	.073	1.85

NOTES:
1. CONTROLLING DIMENSIONS ARE IN MILLIMETERS (ANGLES IN DEGREES).
2. THIS LAND PATTERN IS FOR REFERENCE PURPOSES ONLY. CONSULT YOUR MANUFACTURING GROUP TO ENSURE YOUR COMPANY'S MANUFACTURING GUIDELINES ARE MET.
3. THERMAL VIAS IN THE LAND PATTERN OF THE EXPOSED PAD SHALL BE CONNECTED TO A SYSTEM GROUND PLANE. FAILURE TO DO SO MAY COMPROMISE THE THERMAL AND/OR FUNCTIONAL PERFORMANCE OF THE DEVICE.

Marking

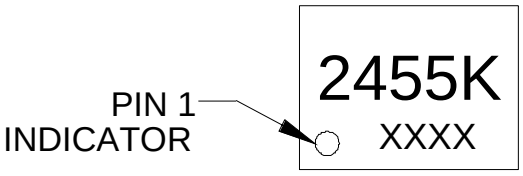

XXXX = Date Code

Ordering Information

Part Number	Qty per Reel	Reel Size
EClamp2455K.TCT	3000	7 Inch

This is a lead-free RoHS/WEEE Compliant Device
EMIClamp and EClamp are marks of Semtech Corporation

Tape and Reel Specification

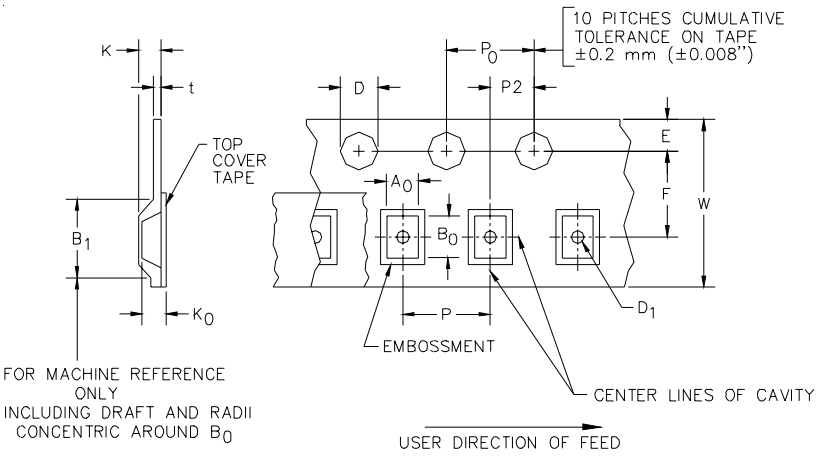

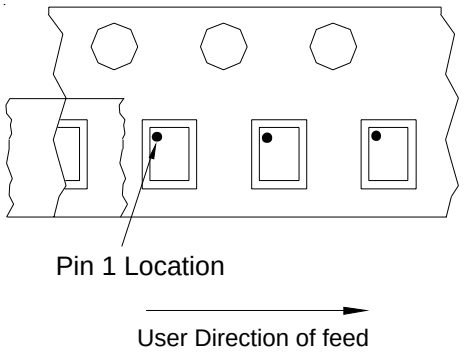

Device Orientation in Tape

A0	B0	K0
1.51 +/-0.05 mm	1.91 +/-0.05 mm	0.66 +/-0.05 mm

Tape Width	B, (Max)	D	D1	E	F	K (MAX)	P	P0	P2	T(MAX)	W
8 mm	4.2 mm (.165)	1.5 + 0.1 mm - 0.0 mm (0.59 +.005 - .000)	0.8 mm ±0.05 (.031)	1.750±.10 mm (.069±.004)	3.5±0.05 mm (.138±.002)	2.4 mm (.094)	4.0±0.1 mm (.157±.00-4)	4.0±0.1 mm (.157±.00-4)	2.0±0.05m-m (.079±.002)	0.4 mm (.016)	8.0 mm + 0.3 mm - 0.1 mm (.312±.012)

Contact Information

Semtech Corporation
Protection Products Division
200 Flynn Rd., Camarillo, CA 93012
Phone: (805)498-2111 FAX (805)498-3804