GENERAL DESCRIPTION

EC4216 is a Linear LED Driver of 6-segment LED switch, and its current of each segment in Pow=15V and V_D=20V can provide 60mA by Sink. In addition, it contains simple application circuit, every few external components (e.g. a bridge rectifier external resistor and a 4.7uF capacitor are required only in use of 2 Watts), OVP (Over Voltage Protection) Function, and Negative Temperature Coefficient Output.

FEATURES

- SOP-8L(Exposed Pad) package
- Simple application circuit
- Built-in 8V~15V Zener Diode Equivalent circuit, provides for internal circuit, without Start up HVNMOS, convenient for 110V/220V power use.

APPLICATIONS

- LED Bulbs

ABSOLUTE MAXIMUM RATINGS

- I_Z=10mA.
- Pow=16.5V.
- D1~D6 Break Down Voltage=600V at Pow=0V.
- Operating Temperature Range :-40℃ to 120℃
- Storage Temperature Range :-40℃ to 140℃
- ESD Level……(H.B.M) 2KV
  (M.M) 200V

Note:

Absolute Maximum Ratings are those values beyond which damage to the device may occur. Functional Operation under these conditions is not implied. Continuous operation of the device at the absolute rating level may affect device reliability.

PIN CONFIGURATION

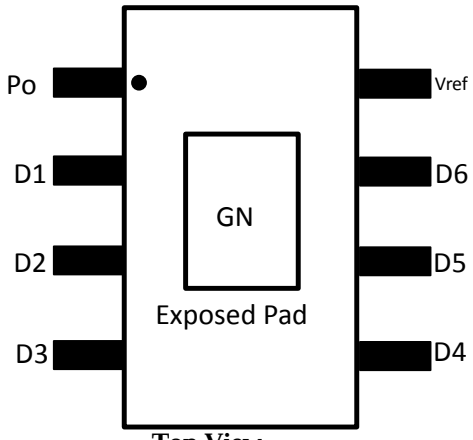

Top View

Pin Number	Pin Name	Function
1	Pow	8V~15V Power
2	D1	Segment 1 Driver
3	D2	Segment 2 Driver
4	D3	Segment 3 Driver
5	D4	Segment 4 Driver
6	D5	Segment 5 Driver
7	D6	Segment 6 Driver
8	Vref	2.5V Reference & Set Power Voltage
Exposed Pad	Gnd	Ground

Ordering Information

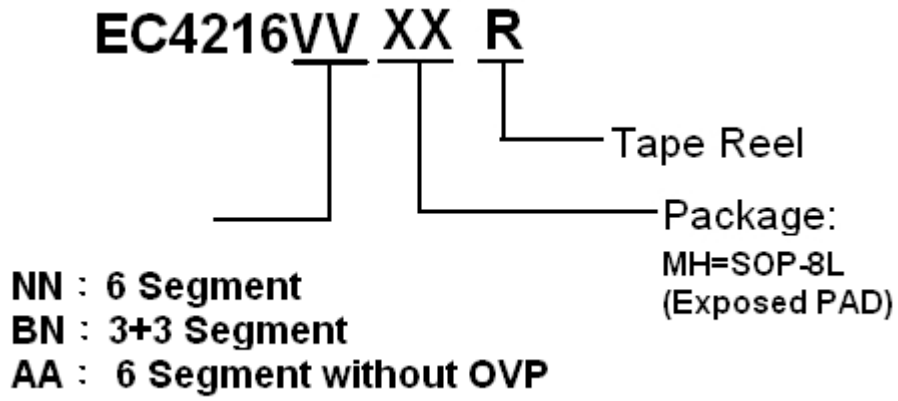

Part No.	Package Type	Marking Information	Remark
EC4216NNMHR	SOP-8L (Exposed PAD)	EC4216 LLLLL YYWWT	1. LLLLL：Lot No 2. YYWW：Date Code 3. T：Internal Tracking Code
EC4216BNMHR		4216B LLLLL YYWWT	
EC4216AAMHR		EC4216 LLLLAA YYWWT	

ELECTRICAL CHARACTERISTICS

T_A = 25°C unless otherwise specified

Parameter	Symbol	Condition	Min	Typ	Max	Unit
Power	Pow	R1=22k, V_{CC}=30V, D1~D6 Open	8.25	8.36	8.51	V
Reference Voltage	Vref	Pin8 Open	2.54	2.59	2.64	V
Leak Current	I_{Leak}	Pow=0V, $V_{(D1\sim D6)}$=40V		0.8	1.25	uA
Driver Current	I_D	Pow=15V, V_D=20V	55	60	64	mA
Quiescent Current	I_Q	R1=150k, D1~D6 Open, Vi=110V_{rms}		0.75		mA_{rms}
Over Voltage Protection	OVP	Segment D6 Voltage	82	92	108	V
Switch Segment Current	I_{SW}	D_{N+1} current (I_{DN+1})to turn off D_N		12		mA
Vref Input Resistor	Ri	Pow Open, Pin8 to Gnd Resistor		88		kΩ
Channel Resistor	R_{ON}	V_{CC}=30V, R1=22k, C1=4.7uF	173	176.53	180	Ω

Functional Description

Traditional single-segment Linear LED Driver needs to use higher Driver LED Current in order to increase brightness when LED lights up, so the drawback is the low efficiency of LED. EC4216 is a six-segment Linear LED designed to improve the drawback of single-segment Drive LED. The six-segment switch LED Driver is to divide traditional single-segment LED into six segments, and then conducts segment by segment according to the input voltage changes (D1->D1+D2-> D1+D2+D3 …….). Such an arrangement can overcome the Forward bias of LED, allowing the LED to light up when the input voltage is low, and thus increase the efficiency of the LED, but also no Over Driver LED is required. EC4216 consists of two portions, one is Chip power; please refers to Application Circuit (Fig1). In the Application Circuit, an external resistor R3 is used to set the operating voltage of Chip and the output current for D1~D6. The set method is as follows: two resistors R9 (with value 192K) and R9A (with value 88k) are set between Chip Pin1 (Pow) and Pin8 (Vref), and a reference voltage 2.59V is on Pin8. The relationship among Pow, Vref, R9 and R9A is shown as formula 1.

$$Pow = 2.59\,V + 2.59\,V\frac{R9}{R} \quad \ldots\ldots \text{formula 1}$$

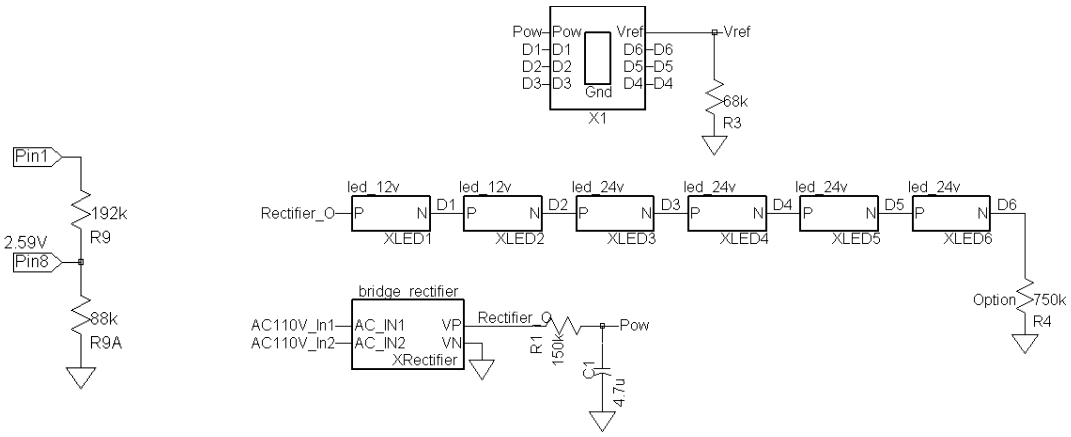

Fig-1 $110V_{RMS}$ Application Circuit

Therefore, where the external resistor R3 does not exist (Default), R=88k, and Pow=8.3V, and where R=38.5k (R3=68k//R9A), the Pow=15.56V. The second portion includes Segment Switch Circuit and LED Current Driver. Six segments will be conducted sequentially according to Sine Wave changes. When Sine Wave is under positive slope changes, the conducting way is as follows: D1, D1+D2, D1+D2+D3, D1+D2+D3+D4, D1+D2+D3+D4+D5, and D1+D2+D3+D4+D5+D6, and when the Sine Wave is under negative slop changes, then the way is in the opposite direction. The switch of those segments is carried out by Segment Switch Circuit. The conditions to switch two segments is that where $I_{D(N+1)} \geqq 12mA$ is closed, $D_{(N)}$ ....Segment is turned off. Drive Current is relevant to Pow voltage; in Default value, the external resistor R3 of application circuit does not exist, Pow=8.3V. Where R3=68k, the Pow=15.6V, and where $V_{D(1\sim6)}$=20V, the maximum current of each Segment (D1~D6) is 60mA. As for the relationship between Drive Current and Pow, please refer to Fig2 and Fig3.

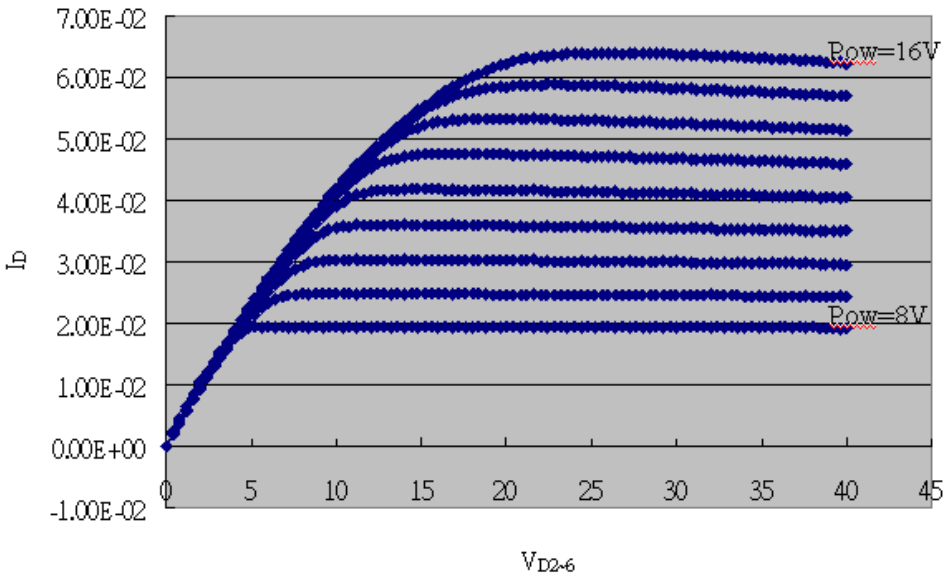

Fig2 $D_{2\sim6}$ Drive Current with Pow

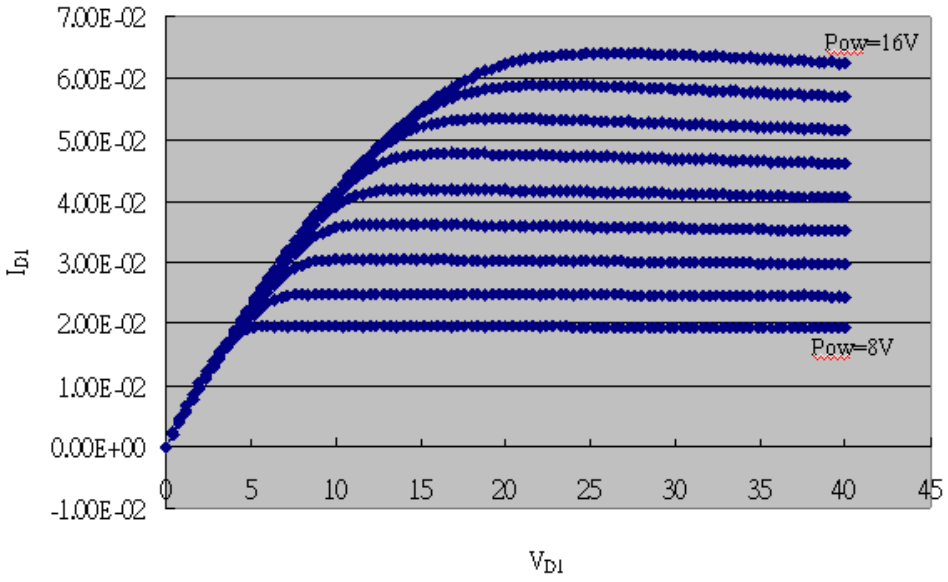

Fig3 D1 Drive Current with Pow

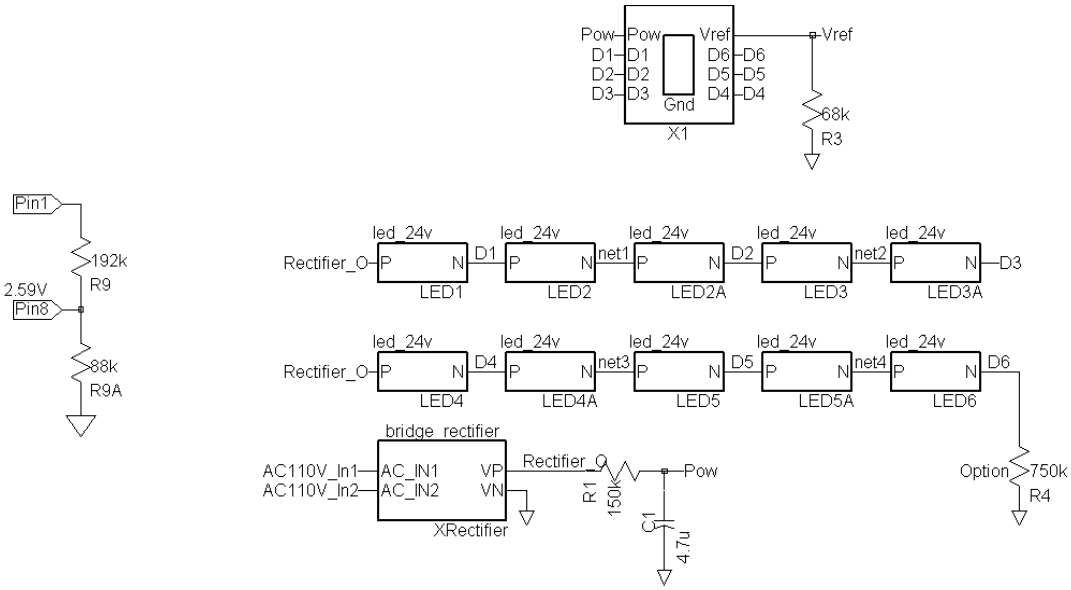

Fig4 3+3 Segment Application for EC4216BNMHR

OUTLINE DIMENSIONS

SOP-8L(Exposed PAD)

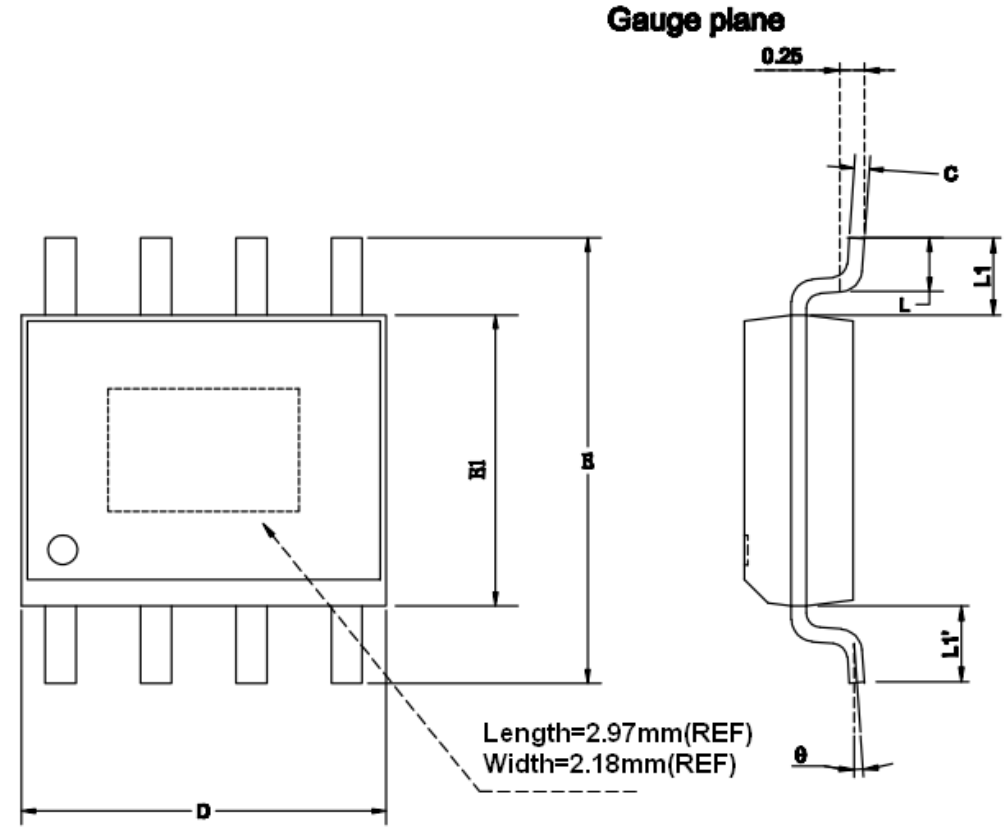

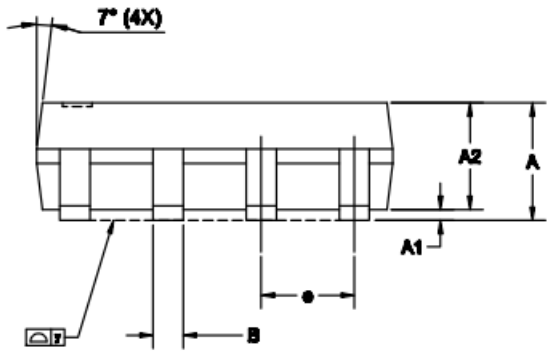

SYMBOLS	DIMENSIONS IN MILLIMETERS			DIMENSIONS IN INCHES		
	MIN	NOM	MAX	MIN	NOM	MAX
A	1.40	1.50	1.60	0.055	0.059	0.063
A1	0.00	—	0.10	0.000	—	0.004
A2	—	1.45	—	—	0.057	—
B	0.33	—	0.51	0.013	—	0.020
C	0.19	—	0.25	0.007	—	0.010
D	4.80	—	5.00	0.189	—	0.197
E1	3.80	3.90	4.00	0.150	0.153	0.157
e	—	1.27	—	—	0.050	—
E	5.80	6.00	6.20	0.228	0.236	0.244
L	0.40	—	1.27	0.016	—	0.050
y	—	—	0.10	—	—	0.004
θ	0°	—	8°	0°	—	8°
L1-L1'	—	—	0.12	—	—	0.005
L1	1.04REF			0.041REF		