EC28 Series

- RoHS Compliant (Pb-free)
- HCMOS output
- 2.5V supply voltage
- 14 pin DIP package
- Stability to ±20ppm
- Custom lead length, gull wing options available

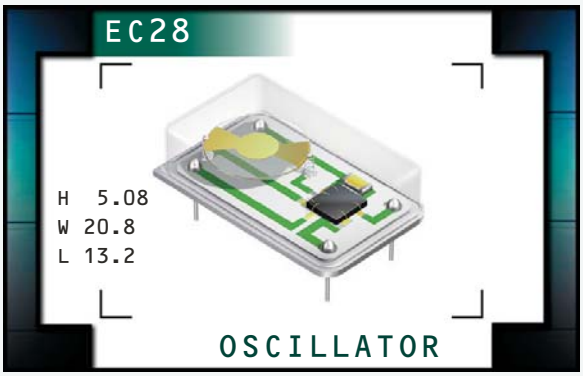

NOTES

ELECTRICAL SPECIFICATIONS

Frequency Range (MHz)		1.544MHz to 33.000MHz
Operating Temperature Range (OTR)	±100ppm, ±50ppm, or 25ppm	0°C to 70°C or -40°C to 85°C
	±20ppm	0°C to 70°C
Storage Temperature Range (STR)		-55°C to 125°C
Supply Voltage (V_{DD})		2.5V_{DC} ±5%
Input Current (I_{DD})	≤24.000MHz	10mA Maximum
	>24.000MHz	20mA Maximum
Frequency Tolerance / Stability	Inclusive of Operating Temperature Range, Supply Voltage, and Load	±100ppm, ±50ppm, ±25ppm, or ±20ppm Maximum (0°C to 70°C Only)
Output Voltage Logic High (V_{OH})		90% of V_{DD} Minimum I_{OH}=-4mA
Output Voltage Logic Low (V_{OL})		10% of V_{DD} Minimum I_{OL}=+4mA
Rise Time / Fall Time (T_R/T_F)	20% to 80% of Waveform ≤24.000MHz	6 nSeconds Maximum
	20% to 80% of Waveform >24.000MHz	4 nSeconds Maximum
Duty Cycle (SYM)	at 50% of Waveform	50 ±10(%) (Standard) or 50 ±5(%) (Optional)
Load Drive Capability (C_{LOAD})		15pF HCMOS Load
Tri-State Input Voltage	V_{IH}:No Connection	Enables Output
	V_{IH}:≥90% of V_{DD}	Enables Output
	V_{IL}:≤10% of V_{DD}	Disables Output: High Impedance
Aging (at 25°C)		±5ppm / year Maximum
Start Up Time (T_S)		10 mSeconds Maximum
Period Jitter: Absolute		±100pSeconds Maximum
Period Jitter: One Sigma		±25pSeconds Maximum

MANUFACTURER	CATEGORY	SERIES	PACKAGE	VOLTAGE	CLASS	REV. DATE
ECLIPTEK CORP.	OSCILLATOR	EC28	14 pin DIP	2.5V	OS53	07/06

PART NUMBERING GUIDE

EC28 00 ET T TS - 32.000M - G

FREQUENCY TOLERANCE / STABILITY
00=±100ppm Maximum (Standard)
45=±50ppm Maximum, 25=±25ppm Maximum
20=±20ppm Maximum

OPERATING TEMP. RANGE
Blank=0°C to 70°C (Standard), ET=-40°C to 85°C

DUTY CYCLE
Blank=50 ±10(%) (Standard), T=50 ±5(%)

AVAILABLE OPTIONS
Blank=None (Standard)
CLXXX=Custom Lead Length (See Page 133)
G=Full Size Gull Wing (See Page 132)

FREQUENCY

OUTPUT CONTROL FUNCTION
TS=Tri-State Enable High

NOTES

MECHANICAL DIMENSIONS
ALL DIMENSIONS IN MILLIMETERS

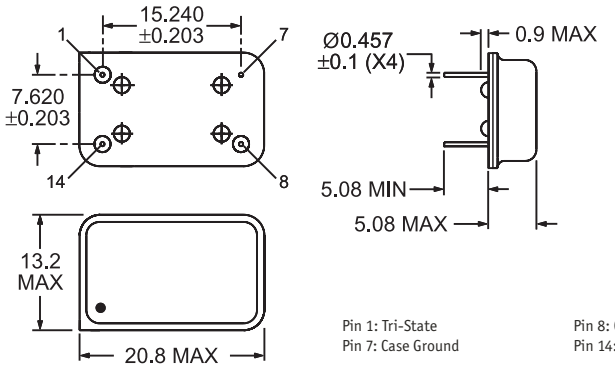

Pin 1: Tri-State
Pin 7: Case Ground
Pin 8: Output
Pin 14: Supply Voltage

ENVIRONMENTAL/MECHANICAL SPECIFICATIONS

Characteristic	Specification
Fine Leak Test	MIL-STD-883, Method 1014, Condition A
Gross Leak Test	MIL-STD-883, Method 1014, Condition C
Mechanical Shock	MIL-STD-202, Method 213, Condition C
Vibration	MIL-STD-883, Method 2007, Condition A
Lead Integrity	MIL-STD-883, Method 2004
Solderability	MIL-STD-883, Method 2002
Temperature Cycling	MIL-STD-883, Method 1010
Resistance to Soldering Heat	MIL-STD-883, Method 210
Resistance to Solvents	MIL-STD-883, Method 215

MARKING SPECIFICATIONS

Line 1: ECLIPTEK
Line 2: EC28 TS
- Output Control Function
  TS = Tri-State Enable High
- Series Designator

Line 3: XX.XXX M
- Frequency in MHz
  (5 Digits Maximum + Decimal)

Line 4: XX Y ZZ
- Week of Year
- Last Digit of Year
- Ecliptek Manufacturing Identifier

Note: Pin 1 shall be designated with a dot

MANUFACTURER	CATEGORY	SERIES	PACKAGE	VOLTAGE	CLASS	REV. DATE
ECLIPTEK CORP.	OSCILLATOR	EC28	14 pin DIP	2.5V	OS53	07/06

EC28 Series

- RoHS Compliant (Pb-free)
- HCMOS output
- 2.5V supply voltage
- 8 pin DIP package
- Stability to ±20ppm
- Custom lead length, gull wing options available

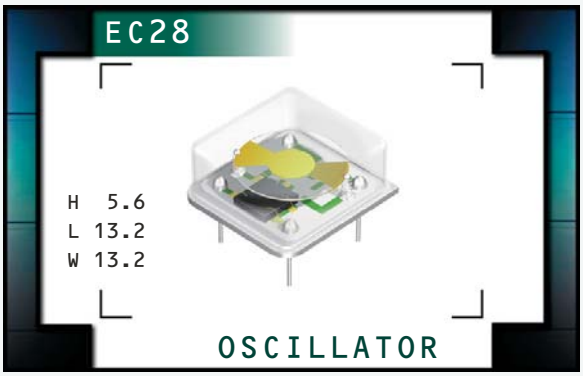

NOTES

ELECTRICAL SPECIFICATIONS

Frequency Range (MHz)		1.544MHz to 33.000MHz
Operating Temperature Range (OTR)	±100ppm, ±50ppm, or ±25ppm	0°C to 70°C or -40°C to 85°C
	±20ppm	0°C to 70°C
Storage Temperature Range (STR)		-55°C to 125°C
Supply Voltage (V_{DD})		2.5V_{DC} ±5%
Input Current (I_{DD})	≤24.000MHz	10mA Maximum
	>24.000MHz	20mA Maximum
Frequency Tolerance / Stability	Inclusive of Operating Temperature	±100ppm, ±50ppm, ±25ppm, or
	Range, Supply Voltage, and Load	±20ppm Maximum (0°C to 70°C Only)
Output Voltage Logic High (V_{OH})		90% of V_{DD} Minimum I_{OH}=-4mA
Output Voltage Logic Low (V_{OL})		10% of V_{DD} Maximum I_{OL}=+4mA
Rise Time / Fall Time (T_R/T_F)	20% to 80% of Waveform ≤24.000MHz	6 nSeconds Maximum
	20% to 80% of Waveform >24.000MHz	4 nSeconds Maximum
Duty Cycle (SYM)	at 50% of Waveform	50 ±10(%) (Standard) or 50 ±5(%) (Optional)
Load Drive Capability (C_{LOAD})		15pF HCMOS Load
Tri-State Input Voltage	V_{IH}:No Connection	Enables Output
	V_{IH}:≥90% of V_{DD}	Enables Output
	V_{IL}:≤10% of V_{DD}	Disables Output: High Impedance
Aging (at 25°C)		±5ppm / year Maximum
Start Up Time (T_S)		10mSeconds Maximum
Period Jitter: Absolute		±100pSeconds Maximum
Period Jitter: One Sigma		±25pSeconds Maximum

MANUFACTURER	CATEGORY	SERIES	PACKAGE	VOLTAGE	CLASS	REV. DATE
ECLIPTEK CORP.	OSCILLATOR	EC28	8 pin DIP	2.5V	OS54	07/06

PART NUMBERING GUIDE

EC28 00 HS ET T TS - 32.000M - G TR

FREQUENCY TOLERANCE / STABILITY
00=±100ppm Maximum (Standard)
45=±50ppm Maximum, 25=±25ppm Maximum
20=±20ppm Maximum

PACKAGE
HS=Half Size 8 Pin DIP

OPERATING TEMP. RANGE
Blank=0°C to 70°C (Standard), ET=-40°C to 85°C

DUTY CYCLE
Blank=50 ±10(%) (Standard), T=50 ±5(%)

PACKAGING OPTIONS
TR= Tape & Reel (only offered with Half Size G and Half Size G2 Options)

AVAILABLE OPTIONS
Blank=None (Standard)
CLXXX=Custom Lead Length (See Page 133)
G=Half Size Gull Wing (See Page 132)
G2=Half Size Gull Wing (See Page 132)

FREQUENCY

OUTPUT CONTROL FUNCTION
TS=Tri-State Enable High

MECHANICAL DIMENSIONS
ALL DIMENSIONS IN MILLIMETERS

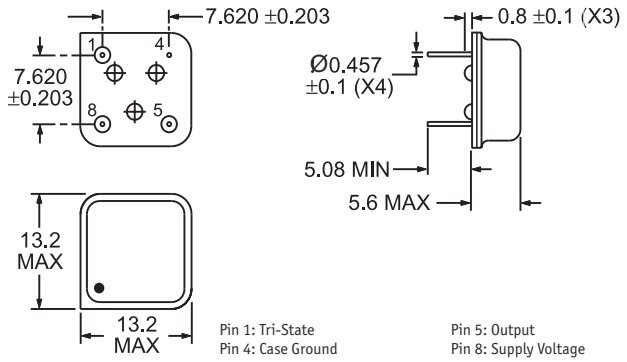

Pin 1: Tri-State
Pin 4: Case Ground

Pin 5: Output
Pin 8: Supply Voltage

TAPE AND REEL DIMENSIONS
ALL DIMENSIONS IN MILLIMETERS

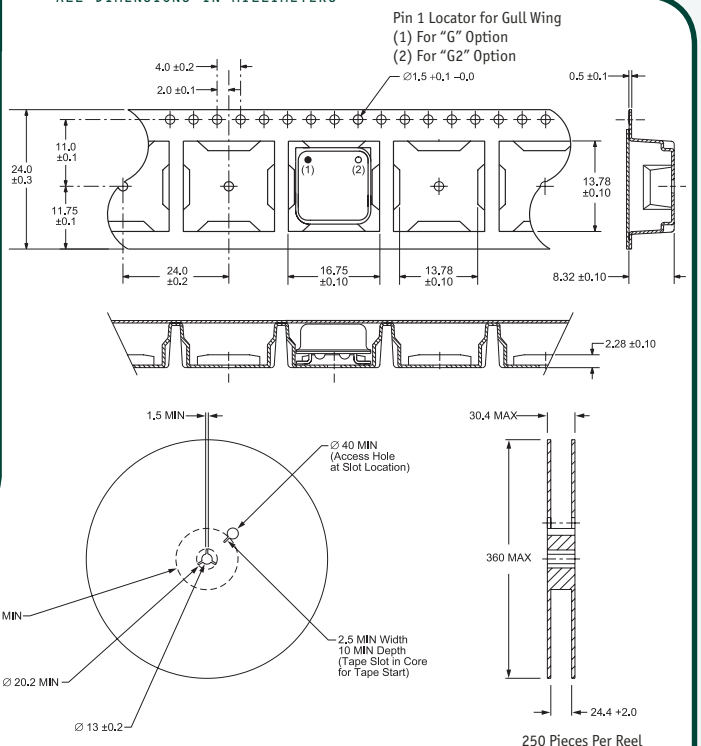

250 Pieces Per Reel
Compliant to EIA-481A

MARKING SPECIFICATIONS

Line 1: ECLIPTEK
Line 2: EC28 TS
- TS = Tri-State Enable High (Output Control Function)
- EC28 (Series Designator)

Line 3: XX.XXX M
- XX.XXX (Frequency in MHz (5 Digits Maximum + Decimal))

Line 4: XX Y ZZ
- XX (Week of Year)
- Y (Last Digit of Year)
- ZZ (Ecliptek Manufacturing Identifier)

Note: Pin 1 shall be designated with a dot

ENVIRONMENTAL/MECHANICAL SPECIFICATIONS

Characteristic	Specification
Fine Leak Test	MIL-STD-883, Method 1014, Condition A
Gross Leak Test	MIL-STD-883, Method 1014, Condition C
Mechanical Shock	MIL-STD-202, Method 213, Condition C
Vibration	MIL-STD-883, Method 2007, Condition A
Lead Integrity	MIL-STD-883, Method 2004
Solderability	MIL-STD-883, Method 2002
Temperature Cycling	MIL-STD-883, Method 1010
Resistance to Soldering Heat	MIL-STD-883, Method 210
Resistance to Solvents	MIL-STD-883, Method 215

MANUFACTURER	CATEGORY	SERIES	PACKAGE	VOLTAGE	CLASS	REV. DATE
ECLIPTEK CORP.	OSCILLATOR	EC28	8 pin DIP	2.5V	OS54	07/06