0.8mm Contact Spacing, Board To Board SMT Connectors
EBB-PR22 SERIES

■ FEATURES

- 0.8mm contact spacing.
- Number of contacts: 20~60 pin. (each 10 pin)
- Stacking Height: 4.85 to 17mm
- Polarization Key prevent mismatching
- Straight receptacle and right angle / straight plug for paralleled and vertical PCB connections
- Available in embossed type for automatic mounting.

■ SPECIFICATIONS

1.ELECTRICAL

- Voltage rating: 200VAC
- Current rating: 0.5A
- Contact resistance: 70mΩ max.
- Insulation resistance: 100MΩ min.

2.MECHANICAL

- Durability: Mate & Unmate with applicability for 500 times, Contact resistance: 90mΩ max.
- Connector Mating Force: 0.1kgf*n (1N*n) max. (n: Pin)
- Connector Unmating Force: 0.01kgf*n (0.098N*n) min. (n: Pin)
- Terminal Retention Force: 0.3kgf (3N) min.

■ MATERIALS

1.MATERIAL

- Contacts: Copper Alloy
- Insulator Housing: High Temp. Thermoplastic
- Hold Down: Copper Alloy

2.PLATING

Contact:
- Nickel In All Area
- Au over Nickel (RoHS Compliant)

Hold Down:
- Nickel In All Area
- Tin over Nickel (RoHS Compliant)

■ PACKING

1.Packing method

- All connector are packed in reel or tray methods.

2.Information on label (stuck to each ploy bag, reel and box)

(1)Part NO. (2)Section. (3)Lot NO. (4)Quantity.
(5)QC stamp. (6)Reprocess NO. (7)ECE mark.

■ PART NUMBERING SYSTEM

EBB - PR22 - P 060 H4F - 3Z - E 700

- 700 — No. of Connectors
  1000: SxxxTx
  700 / 500: SxxxT5
  500: SxxxT8
  200: SxxxT11
  700 / 500: PxxxH4F
  1000 / 500: PxxxT2
  600:PxxxT6
- E — Package Type:
  E: Embossed packing
- 3Z — Plating Type:
  3Z: Au over Nickel (RoHS Compliant)
  42Z: Flash Au over Nickel (for H4F Type)
  (RoHS Compliant)
- H4F — Termination Type:
  H: Horizontal Type (Right Angle)
  T: Vertical Type (Straight)

Mate Height		Plug		
		T2	T6	H4F (R/A)
Socket	TX	4.85	8.85	6.2
	T5	7	11	6.2
	T8	10	14	6.2
	T11	13	17	6.2

- 060 — No. of Contacts:
  020:20Pin. ~ 060:60Pin.
- P — Connector Type:
  P: Plug connector
  S: Socket connector
- PR22 — Series Name: PR22
- EBB — Model Name: EBB: Board to Board Connectors

EBB-PR22-P*H4F**



EBB-PR22-P*T***

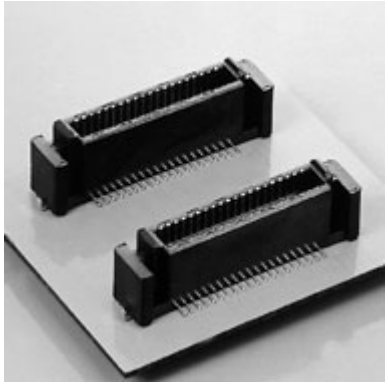

EBB-PR22-S*T***

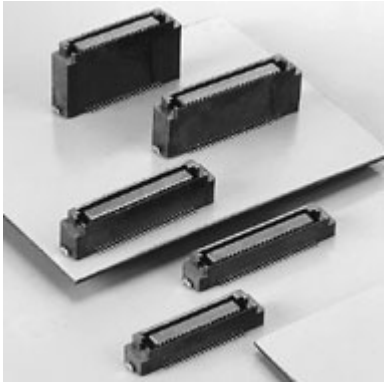

■ DIMENSIONS UNIT:mm

EBB-PR22-PxxxH4F UNIT:mm
Connection Style: Right Angle Plug

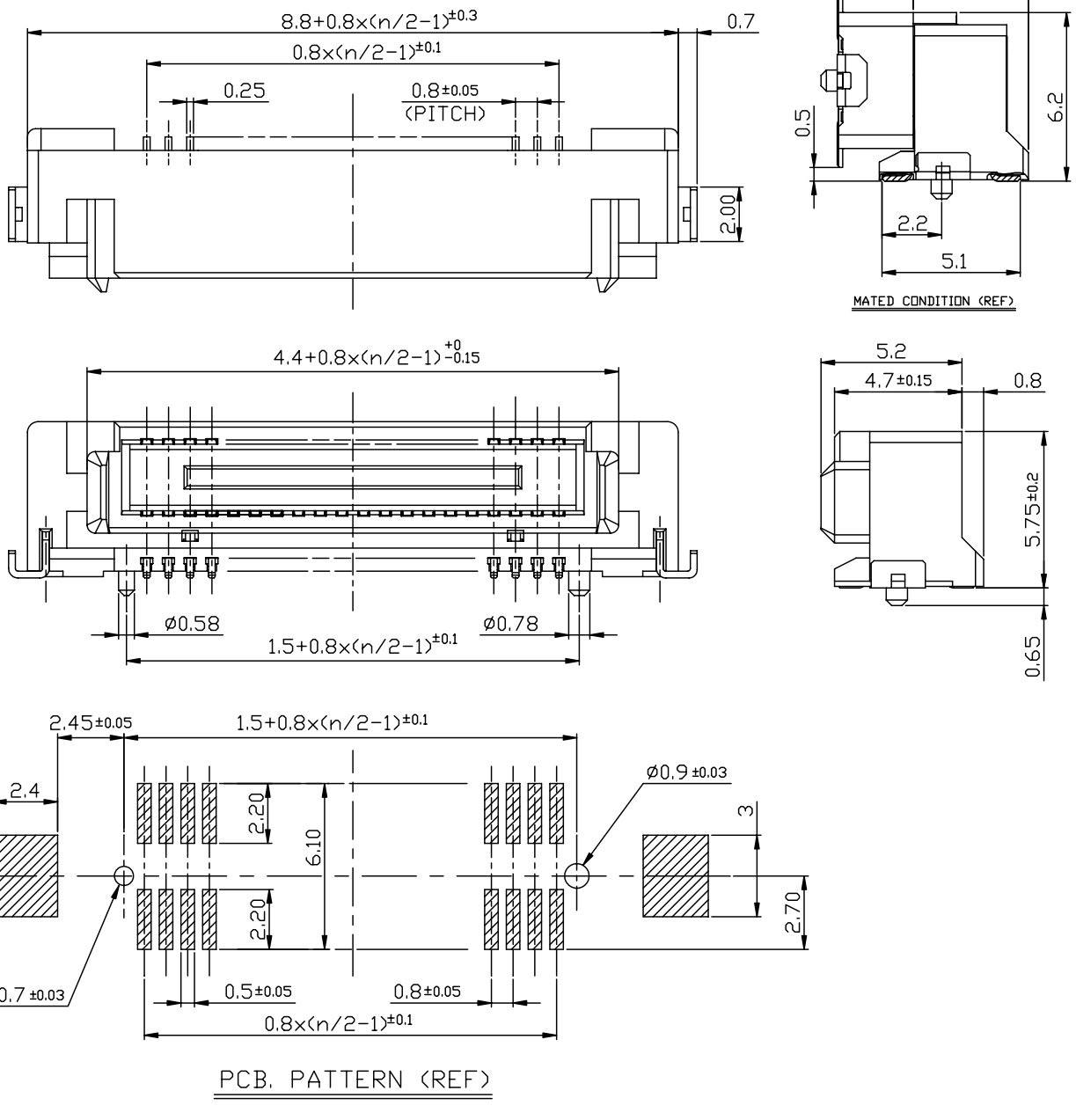

EBB−PR22−PxxxTx UNIT:mm
Connection Style: Straight Plug

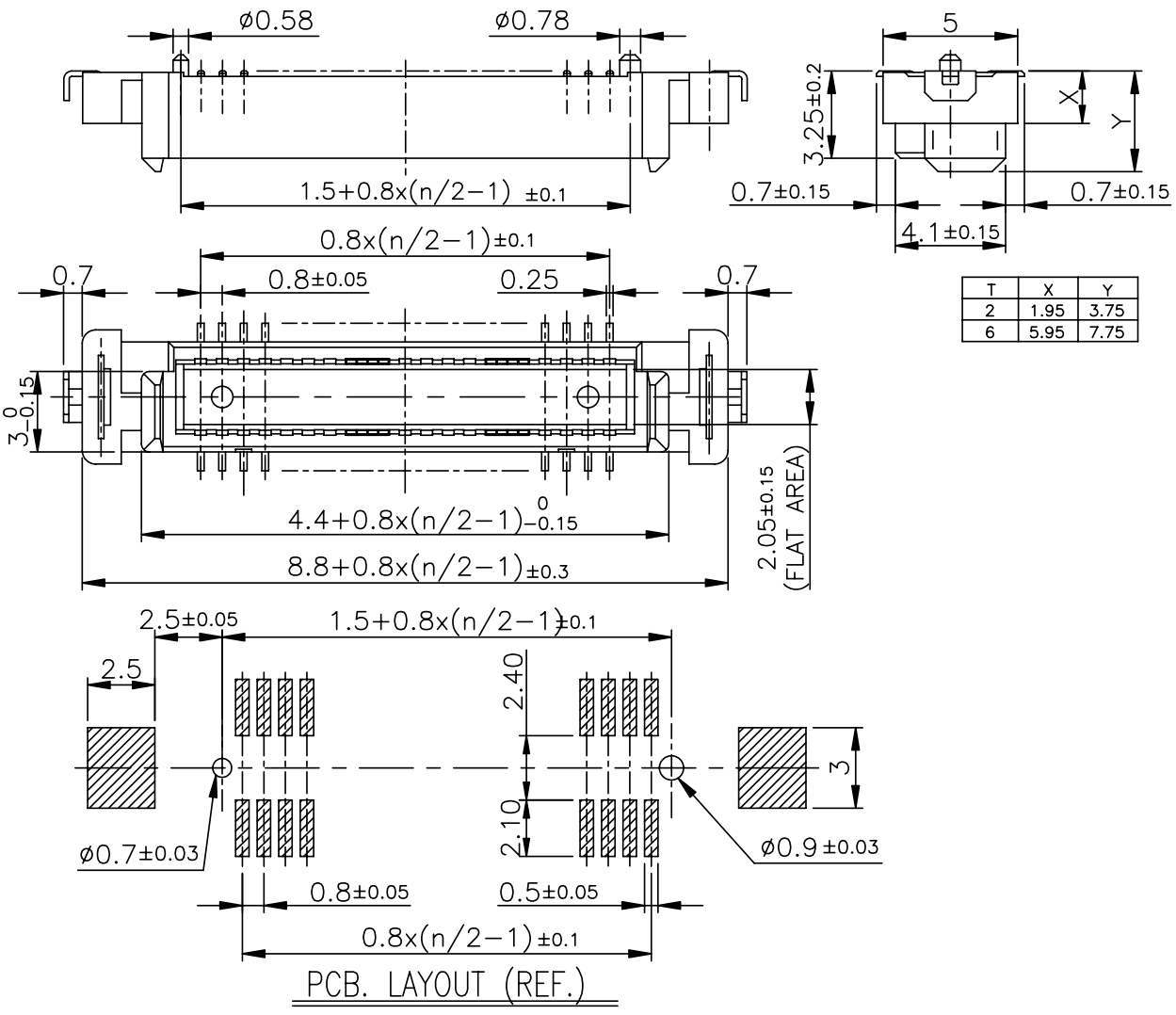

T	X	Y
2	1.95	3.75
6	5.95	7.75

EBB−PR22−SxxxTx UNIT:mm
Connection Style: Straight Receptacle

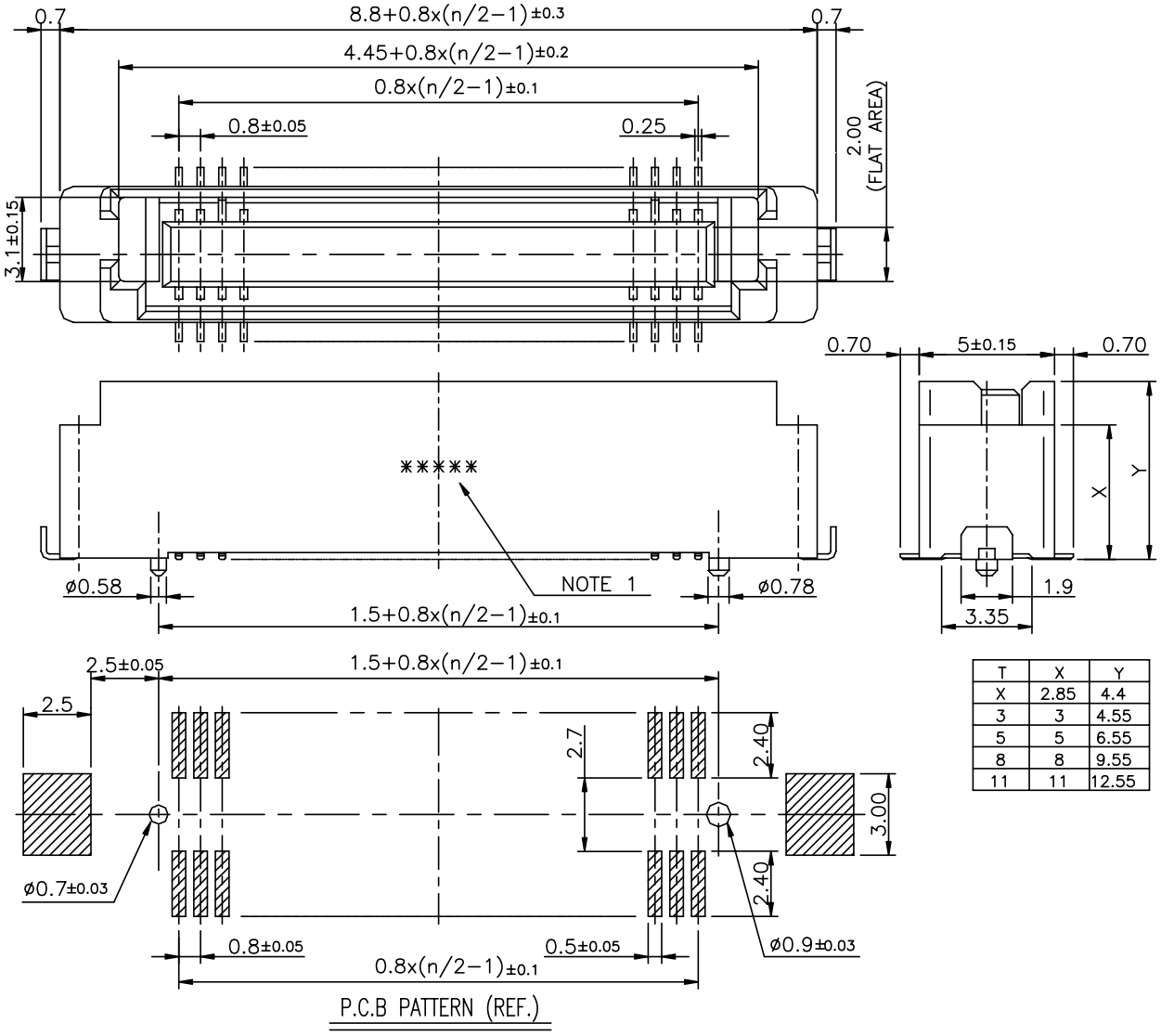

T	X	Y
X	2.85	4.4
3	3	4.55
5	5	6.55
8	8	9.55
11	11	12.55