Rev	AWO #	Description	Date	Appr
-		RELEASED	9/06/10	

APPROVED: _____

DATE: _____ TITLE: _____

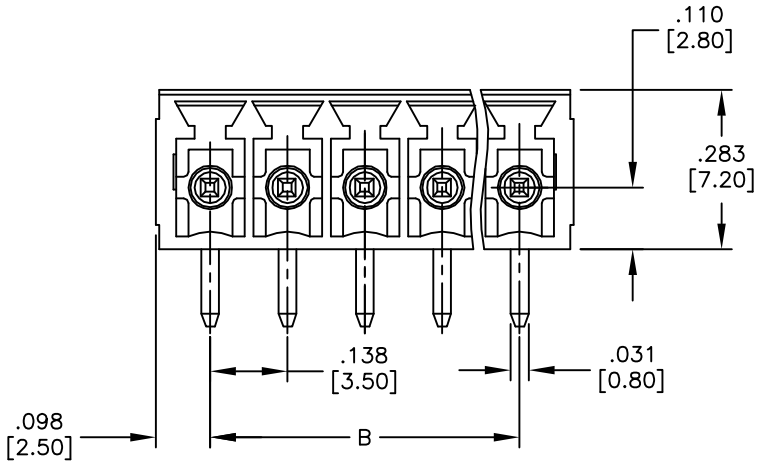

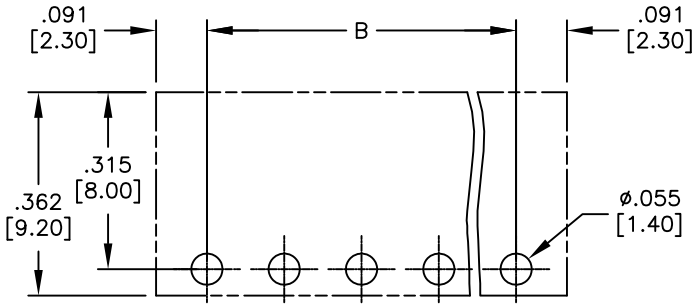

RECOMMENDED PCB LAYOUT

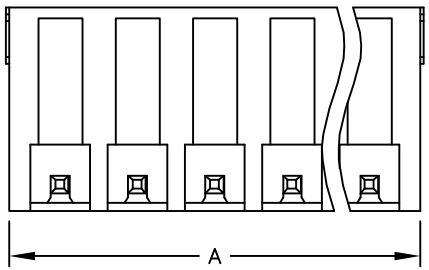

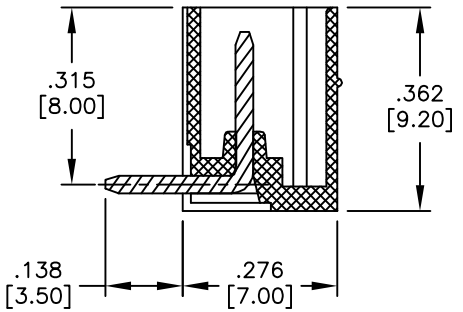

Poles: 2 thru 24
A= .138 [3.50] x No. of (Poles – 1) + .181 [4.60]
B= .138 [3.50] x No. of (Poles – 1)

SPECIFICATIONS:
Material:
Insulator: Thermoplastic, rated UL 94V–0
Insulator color: Green
Contact: Brass, Tin plated
Electrical:
Operation voltage: 300 VAC max
Current rating: 10 Amps max
Withstanding valtage: 1.6KV
Environmental:
Operating temperature: –40°C to +115°C
Lead free, RoHS compliant.
Recommended soldering temp: 235°C for 5 sec.

RoHS COMPLIANT

UNLESS OTHERWISE SPECIFIED
ALL DIMENSIONS ARE INCHES [MM]
TOLERANCES: EXCEPT AS NOTED

INCHES		HOLES	
.X	± .10	Ø.X	±.10
.XX	± .020	Ø.XX	±.015
.XXX	± .015	Ø.XXX	±.010

APPROVALS		DATE
DRAWN	DY	9/06/10
CHECKED		
APPROVED		

ADAM TECH
909 Rahway Avenue, Union, NJ 07083
Phone: 908-687-5000 Fax: 908-687-5710

TITLE: .138 [3.50] TERMINAL BLOCK

SIZE	PART NO.	REV.
X	EB3-XX-A	-

REF:	SCALE:	SHEET
S00007T	NTS	1 OF 1