EVERLIGHT AMERICAS

DATASHEET

SMD ▪ B
EAST1608GA4

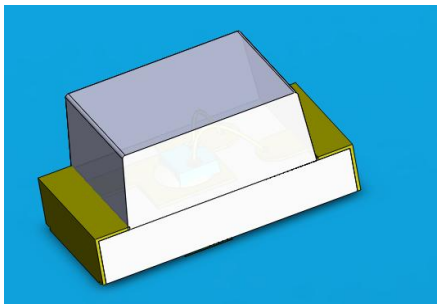

Features

- Package in 8mm tape on 7″ diameter reel.
- Compatible with automatic placement equipment.
- Compatible with infrared and vapor phase reflow solder process.
- Mono-color type.
- Pb-free.
- The product itself will remain within RoHS compliant version.
- Compliance with EU REACH
- Compliance Halogen Free .(Br <900 ppm ,Cl <900 ppm , Br+Cl < 1500 ppm)

Description

- The SMD LED is much smaller than lead frame type components, thus enable smaller board size, higher packing density, reduced storage space and finally smaller equipment to be obtained.
- Besides, lightweight makes them ideal for miniature applications. etc.

Applications

- Backlighting in dashboard and switch.
- Telecommunication: indicator and backlighting in telephone and fax.
- Flat backlight for LCD, switch and symbol.
- General use.

Copyright © 2010, Everlight Americas Inc. All Rights Reserved. Release Date :04-Nov-2009. Issue No: 1

Device Selection Guide

Chip Materials	Emitted Color	Resin Color
AlGaInp	Brilliant Green	Water Clear

Absolute Maximum Ratings (Ta=25℃)

Parameter	Symbol	Rating	Unit
Reverse Voltage	V_R	5	V
Forward Current	I_F	25	mA
eak Forward Current (Duty 1/10 @1KHz)	I_{FP}	100	mA
Power Dissipation	Pd	95	mW
Electrostatic Discharge	ESD_{HBM}	2000	V
Operating Temperature	T_{opr}	-40 ~ +85	℃
Storage Temperature	Tstg	-40 ~ +90	℃
Soldering Temperature	Tsol	Reflow Soldering : 260 ℃ for 10 sec. Hand Soldering : 350 ℃ for 3 sec.	

Copyright © 2010, Everlight Americas Inc. All Rights Reserved. Release Date :04-Nov-2009. Issue No: 1

Electro-Optical Characteristics (Ta=25℃)

Parameter	Symbol	Min.	Typ.	Max.	Unit	Condition
Luminous Intensity	Iv	11.5	-----	28.5	mcd	I_F=20mA
Viewing Angle	$2\theta_{1/2}$	-----	100	-----	deg	
Peak Wavelength	λp	-----	561	-----	nm	
Dominant Wavelength	λd	557.5	-----	565.5	nm	
Spectrum Radiation Bandwidth	Δ λ	-----	20	-----	nm	
Forward Voltage	V_F	1.75	-----	2.35	V	
Reverse Current	I_R	-----	-----	10	μA	V_R=5V

Note:
1.Tolerance of Luminous Intensity: ±11%
2.Tolerance of Dominant Wavelength ±1nm
3. Tolerance of Forward Voltage: ±0.1V

Copyright © 2010, Everlight Americas Inc. All Rights Reserved. Release Date :04-Nov-2009. Issue No: 1

Bin Range of Luminous Intensity

Bin Code	Min.	Max.	Unit	Condition
L1	11.5	14.5	mcd	I_F =20mA
L2	14.5	18.0		
M1	18.0	22.5		
M2	22.5	28.5		

Bin Range Of Dom. Wavelength

Bin Code	Min.	Max.	Unit	Condition
C10	557.5	559.5	nm	I_F =20mA
C11	559.5	561.5		
C12	561.5	563.5		
C13	563.5	565.5		

Bin Range Of Forward Voltage

Bin Code	Min.	Max.	Unit	Condition
0	1.75	1.95	V	I_F =20mA
1	1.95	2.15		
2	2.15	2.35		

Note:
1.Tolerance of Luminous Intensity: ±11%
2.Tolerance of Dominant Wavelength ±1nm
3. Tolerance of Forward Voltage: ±0.1V

Copyright © 2010, Everlight Americas Inc. All Rights Reserved. Release Date :04-Nov-2009. Issue No: 1

Typical Electro-Optical Characteristics Curves

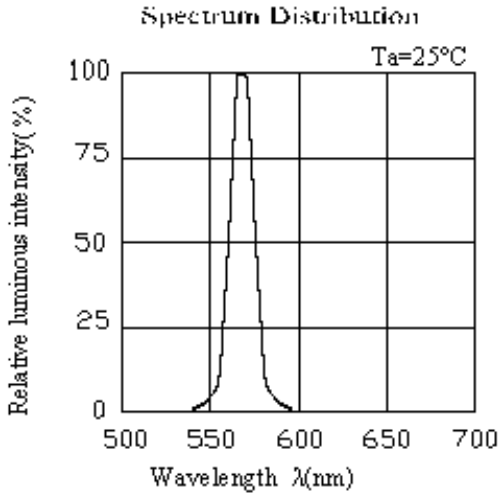

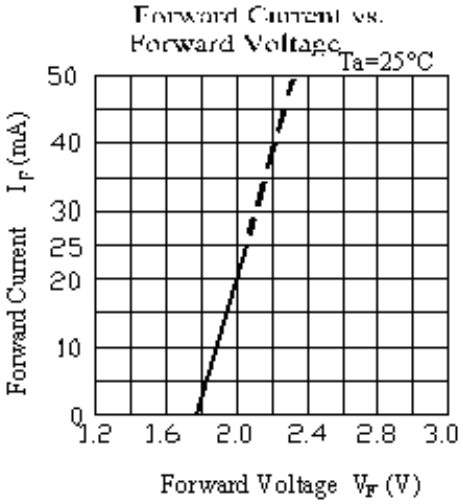

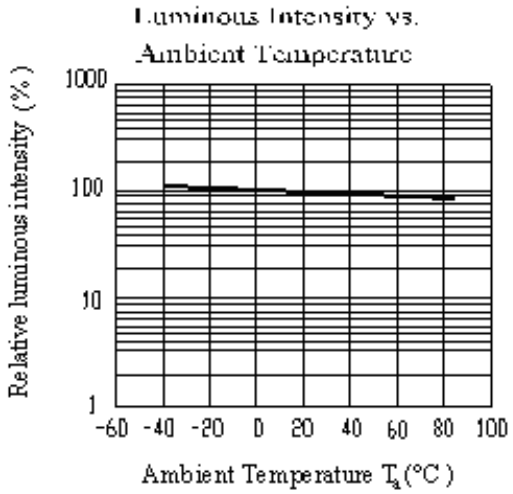

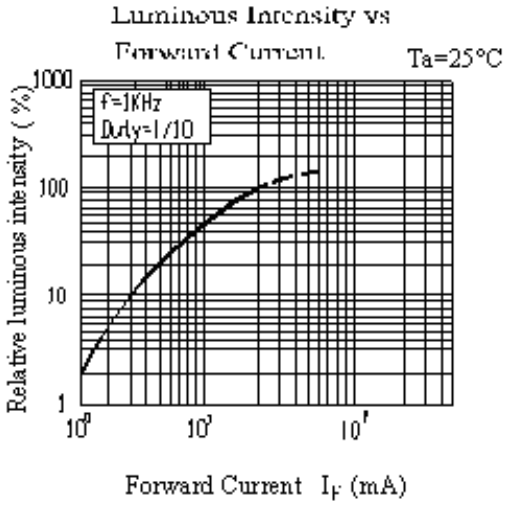

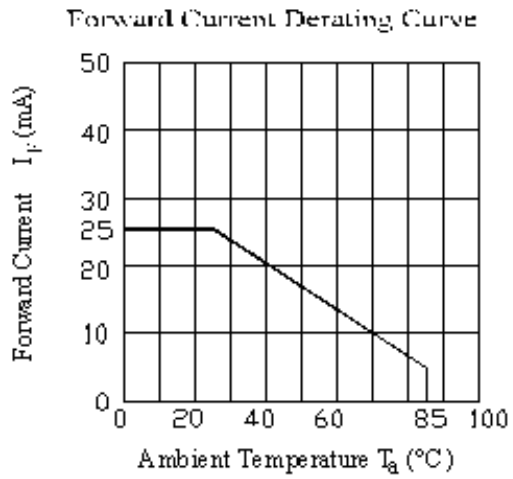

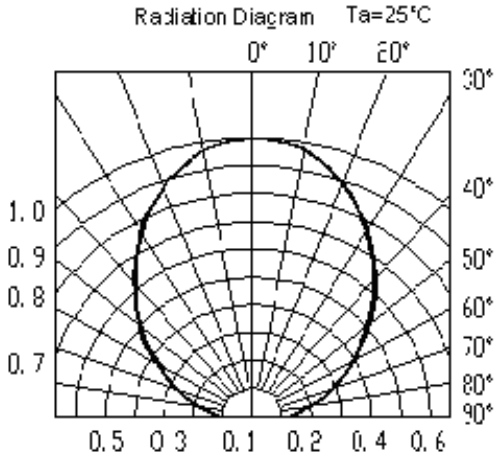

Copyright © 2010, Everlight Americas Inc. All Rights Reserved. Release Date :04-Nov-2009. Issue No: 1

Package Dimension

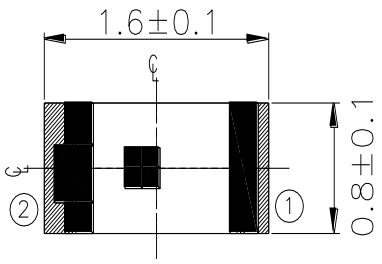

Top

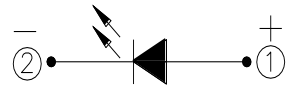

Polarity

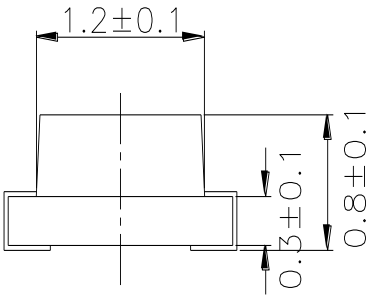

Side

Recommend Sodering Pad

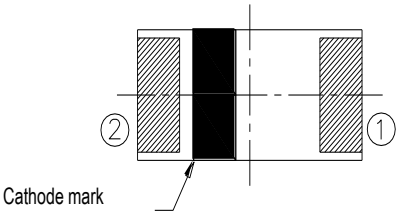

Bottom

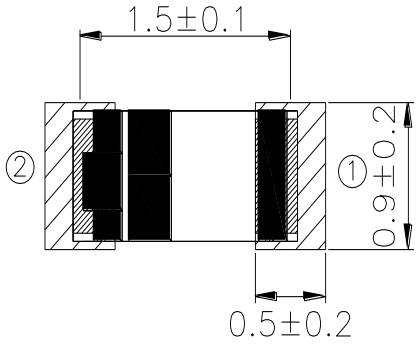

Suggested pad dimension is just for reference only.
Please modify the pad dimension based on individual need.

Note: Tolerances unless mentioned ±0.1mm. Unit = mm

Copyright © 2010, Everlight Americas Inc. All Rights Reserved. Release Date :04-Nov-2009. Issue No: 1

Label Explanation

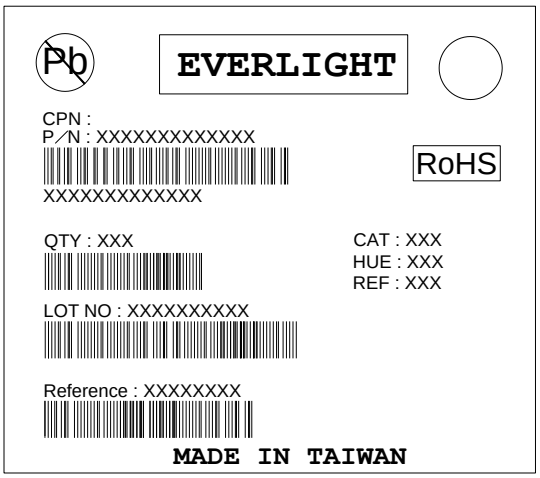

- CPN: Customer's Product Number
- P/N: Product Number
- QTY: Packing Quantity
- CAT: Luminous Intensity Rank
- HUE: Chromaticity Coordinates & Dom. Wavelength Rank
- REF: Forward Voltage Rank
- LOT No: Lot Number

Reel Dimensions

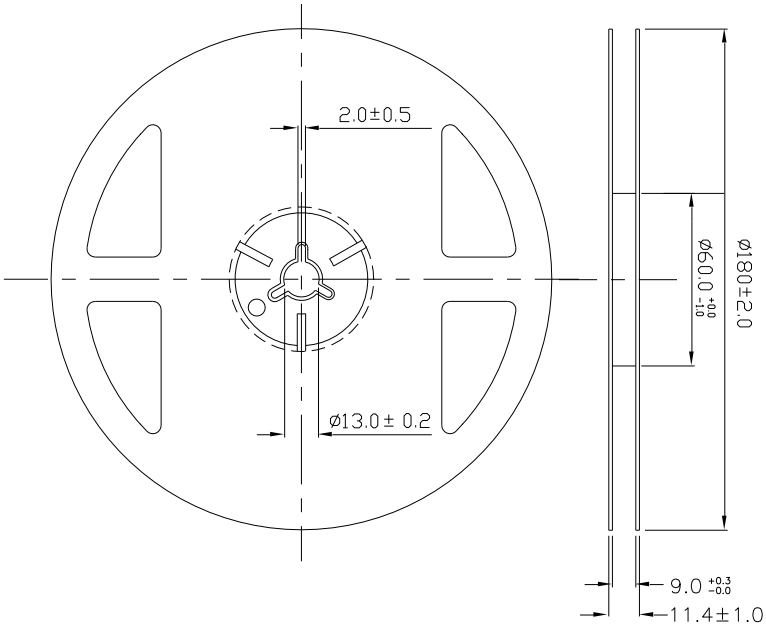

Note: The tolerances unless mentioned is ±0.1mm ,Unit = mm

Copyright © 2010, Everlight Americas Inc. All Rights Reserved. Release Date :04-Nov-2009. Issue No: 1

Carrier Tape Dimensions: Loaded quantity 3000 PCS per reel

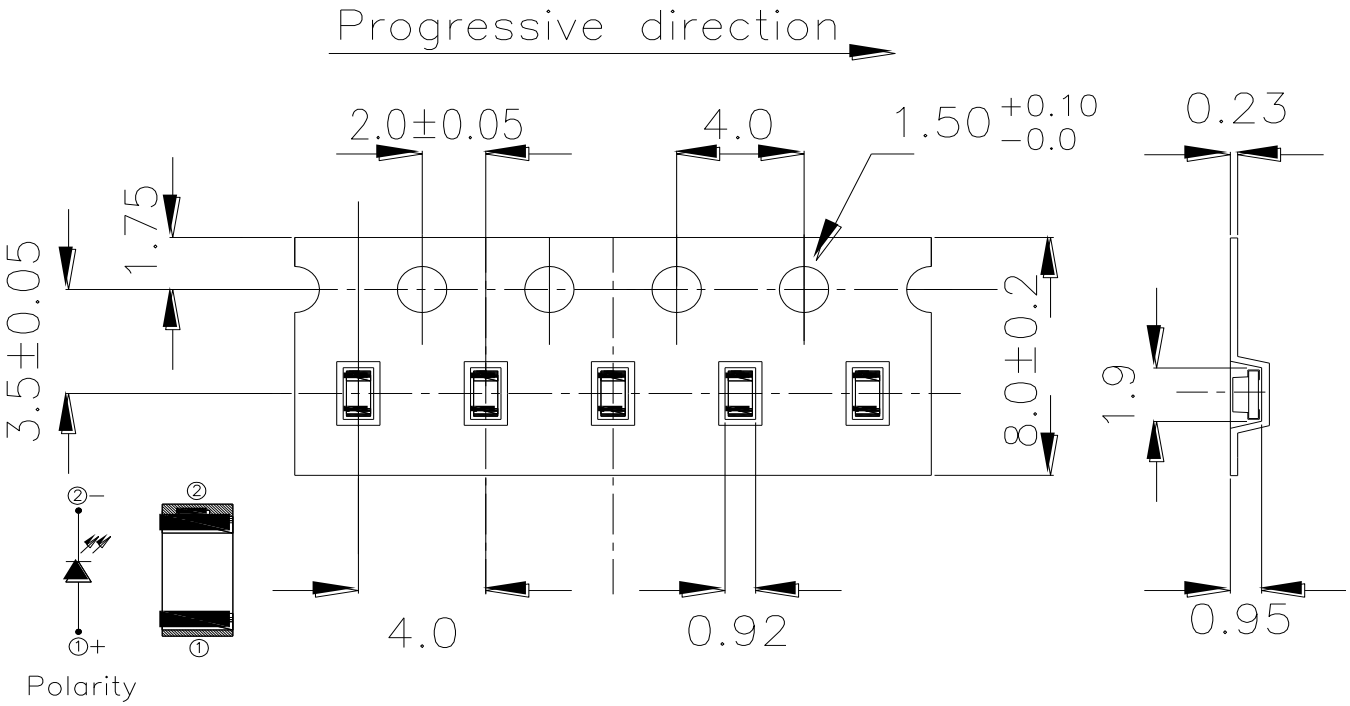

Note: The tolerances unless mentioned is ±0.1mm ,Unit = mm

Moisture Resistant Packaging

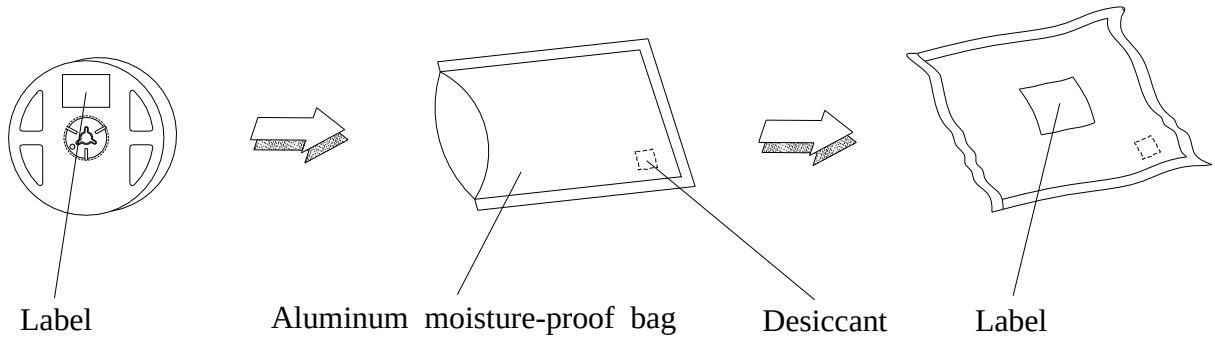

Copyright © 2010, Everlight Americas Inc. All Rights Reserved. Release Date :04-Nov-2009. Issue No: 1

Precautions For Use

1. Over-current-proof
Customer must apply resistors for protection, otherwise slight voltage shift will cause big current change (Burn out will happen).
2. Storage
2.1 Do not open moisture proof bag before the products are ready to use.
2.2 Before opening the package: The LEDs should be kept at 30℃ or less and 90%RH or less.
2.3 After opening the package: The LED's floor life is 1 year under 30℃ or less and 60% RH or less. If unused LEDs remain, it should be stored in moisture proof packages.
2.4 If the moisture absorbent material (silica gel) has faded away or the LEDs have exceeded the storage time, baking treatment should be performed using the following conditions.
Baking treatment : 60±5℃ for 24 hours.
3. Soldering Condition
3.1 Pb-free solder temperature profile

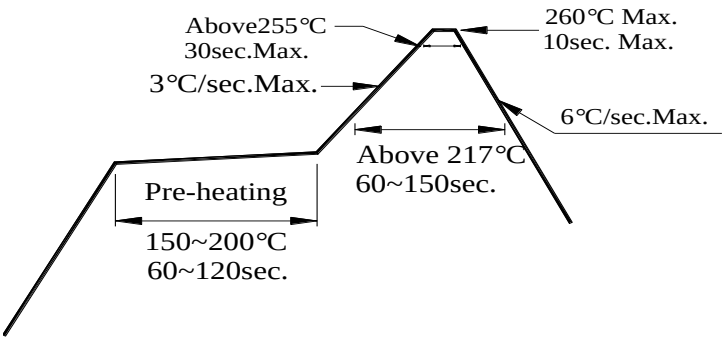

3.2 Reflow soldering should not be done more than two times.
3.3 When soldering, do not put stress on the LEDs during heating.
3.4 After soldering, do not warp the circuit board.
4.Soldering Iron
Each terminal is to go to the tip of soldering iron temperature less than 350℃ for 3 seconds within once in less than the soldering iron capacity 25W. Leave two seconds and more intervals, and do soldering of each terminal. Be careful because the damage of the product is often started at the time of the hand solder.

5.Repairing
Repair should not be done after the LEDs have been soldered. When repairing is unavoidable, a double-head soldering iron should be used (as below figure). It should be confirmed beforehand whether the characteristics of the LEDs will or will not be damaged by repairing.

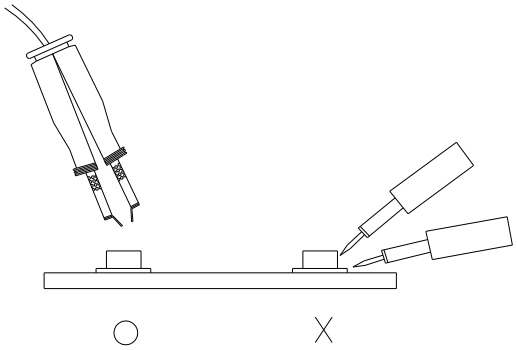

Copyright © 2010, Everlight Americas Inc. All Rights Reserved. Release Date :04-Nov-2009. Issue No: 1

Application Restrictions

High reliability applications such as military/aerospace, automotive safety/security systems, and medical equipment may require different product. If you have any concerns, please contact Everlight Americas before using this product in your application. This specification guarantees the quality and performance of the product as an individual component. Do not use this product beyond the specification described in this document.

Copyright © 2010, Everlight Americas Inc. All Rights Reserved. Release Date :04-Nov-2009. Issue No: 1