DATASHEET

Silicon Planar PIN Photodiode

EAPDSZ4439A0



Features

- Daylight filter
- High sensitivity
- Low capacitance
- Short switching time
- Wide temperature range
- Small package
- Pb free
- The product itself will remain within RoHS compliant version.

Descriptions

- EAPDSZ4439A0 is high sensitivity, fast switching times, low capacitance, compact size, and lack of measurable degradation make it suitable for diverse applications, such as TV and appliance remote control, IR sound transmission, video recorders, and measurement and control.

Applications

- High speed photo detector
- Copier
- Elevator

Device Selection Guide

Part Category	Chip Material	Resin Color
EAPDSZ4439A0	Silicon	Black

Copyright © 2010, Everlight Americas Inc. All Rights Reserved. Release Date : 5/28/2013. Issue No: 1 Rev:1 www.everlightamericas.com

Package Dimensions

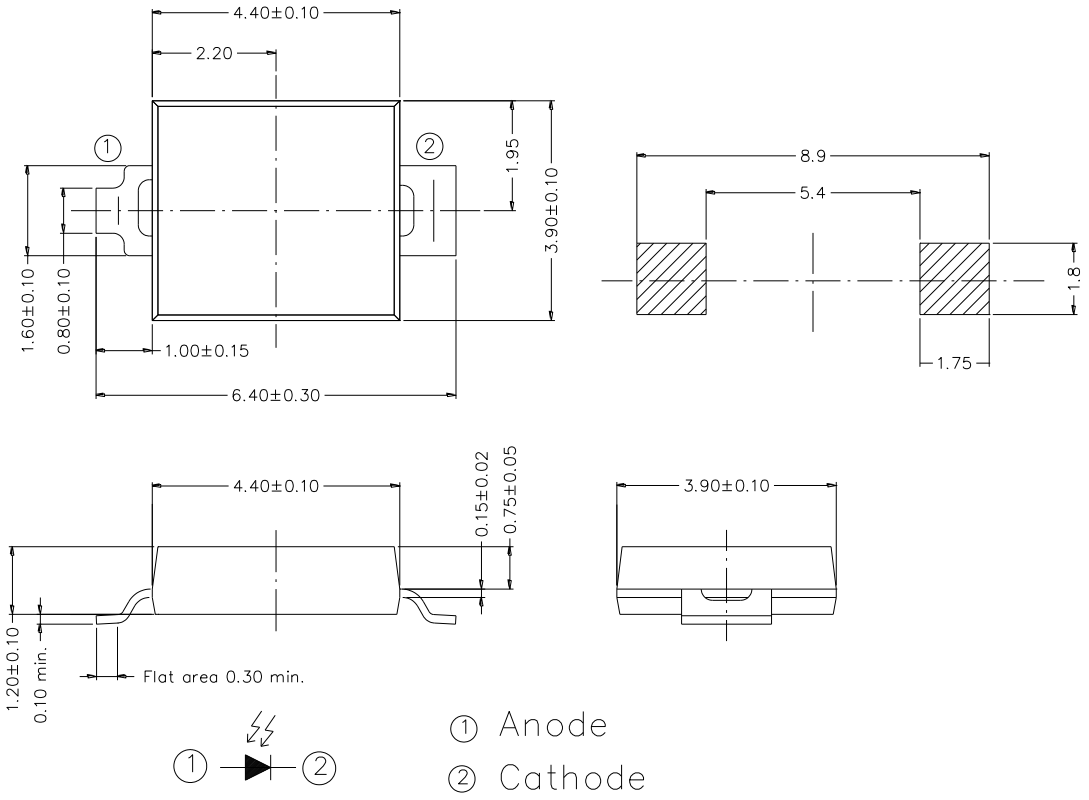

Notes: 1.All dimensions are in millimeters
2.Tolerances unless dimensions ±0.1mm

Absolute Maximum Ratings (Ta=25℃)

Parameter	Symbol	Rating	Units
Reverse Voltage	V_R	32	V
Operating Temperature	T_{opr}	-25 ~ +85	℃
Storage Temperature	T_{stg}	-40 ~ +85	℃
Soldering Temperature	T_{sol}	260	℃
Power Dissipation at(or below) 25℃ Free Air Temperature	P_c	150	mW

Notes: *1:Soldering time≦5 seconds.

Copyright © 2010, Everlight Americas Inc. All Rights Reserved. Release Date : 5/28/2013. Issue No: 1 Rev:1 www.everlightamericas.com

Electro-Optical Characteristics (Ta=25℃)

Parameter	Symbol	Condition	Min	Typ	Max	Unit
Rang Of Spectral Bandwidth	λ	10% of λ_P	730	---	1100	nm
Wavelength Of Peak Sensitivity	λ_P	---	---	940	---	nm
Open-Circuit Voltage	V_{OC}	Ee=5mW/cm^2 λ p=940nm	---	0.35	0.41	V
Short- Circuit Current	I_{SC}	Ee=1mW/cm^2 λ p=940nm	---	35	---	μA
Reverse Light Current	I_L	Ee=1mW/cm^2 λ p=870nm V_R=5V	17	25	---	μA
Reverse Dark Current	I_D	Ee=0mW/cm^2 V_R=10V	---	5	30	nA
Reverse Breakdown Voltage	B_{VR}	Ee=0mW/cm^2 I_R=100 μA	32	170	---	V
Total Capacitance	C_t	Ee=0mW/cm^2 V_R=3V f=1MHz	---	25	---	pF
Rise/Fall Time	t_r/t_f	V_R=10V R_L=1KΩ	---	50/50	---	nS

Parameter	Symbol	Value	Unit
Radiant sensitive area	A	8.0656	mm^2
Dimensions of radiant sensitive area	L×W	2.840×2.840	mm×mm
View Angle	2θ 1/2	130	deg
Spectral sensitivity	Sλ	0.55	A/W
Forward voltage @I_F=100mA	V_F	1.6(Max.)	V

Copyright © 2010, Everlight Americas Inc. All Rights Reserved. Release Date : 5/28/2013. Issue No: 1 Rev:1 www.everlightamericas.com

Typical Electro-Optical Characteristics Curves

Fig.1 Power Dissipation vs. Ambient Temperature

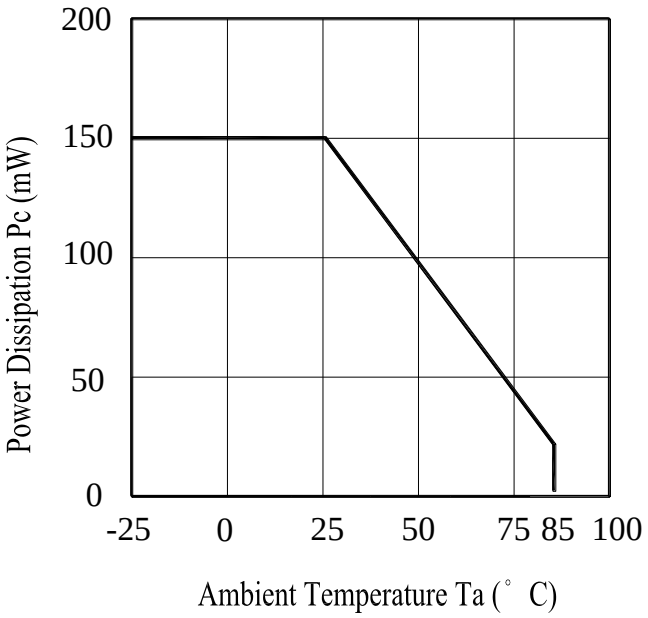

Fig.2 Spectral Sensitivity

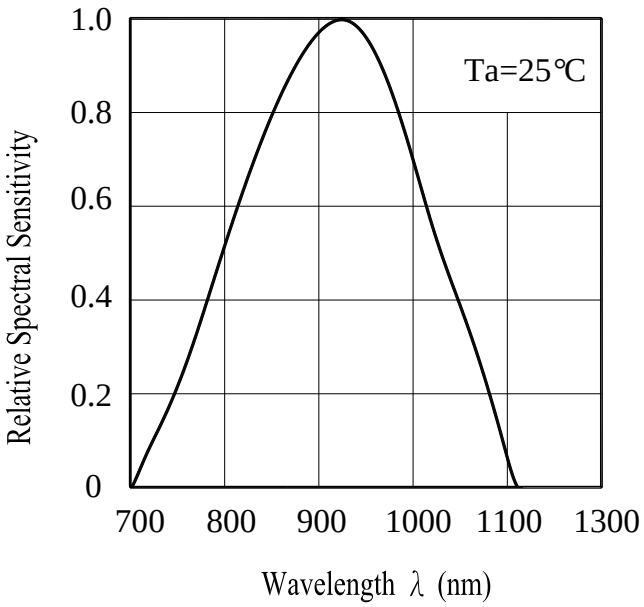

Fig.3 Dark Current vs. Ambient Temperature

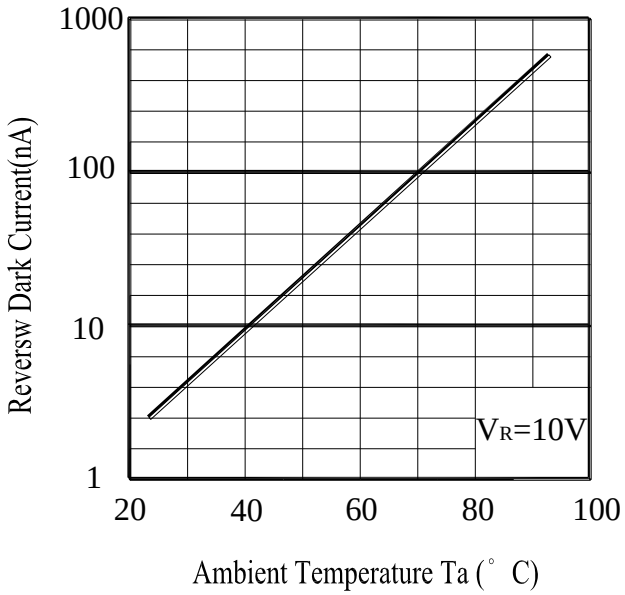

Fig. 4 Reverse Light Current vs. Ee

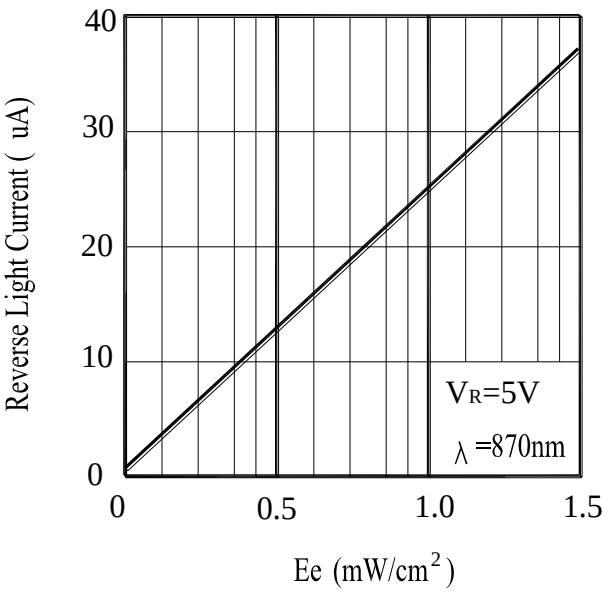

Copyright © 2010, Everlight Americas Inc. All Rights Reserved. Release Date : 5/28/2013. Issue No: 1 Rev:1 www.everlightamericas.com

Typical Electro-Optical Characteristics Curves

Fig.5 Terminal Capacitance vs. Reverse Voltage

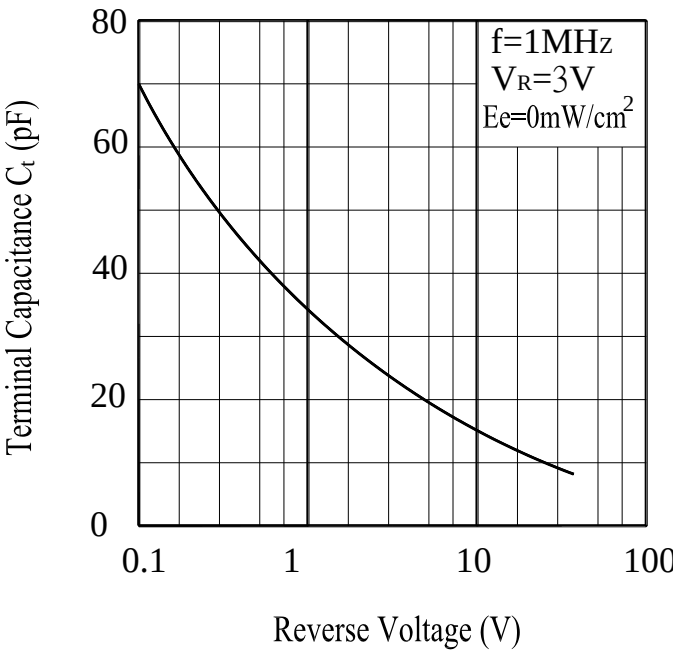

Fig.6 Response Time vs. Load Resistance

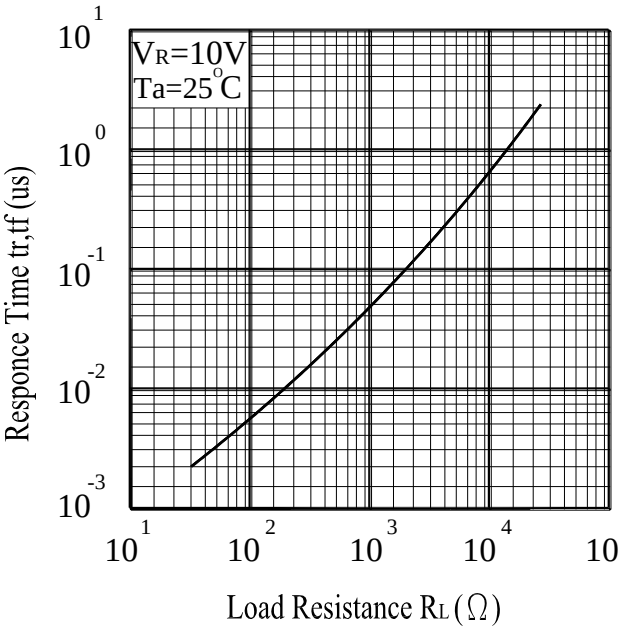

Copyright © 2010, Everlight Americas Inc. All Rights Reserved. Release Date : 5/28/2013. Issue No: 1 Rev:1 www.everlightamericas.com

Precautions For Use

1. Over-current-proof

   Customer must apply resistors for protection,otherwise slight voltage shift will cause big current change (Burn out will happen).

2. Storage

   2.1 Do not open moisture proof bag before the products are ready to use.

   2.2 Before opening the package: The LEDs should be kept at 30℃ or less and 90%RH or less.

   2.3 The LEDs should be used within a year.

   2.4 After opening the package, the LEDs should be kept at 30℃ or less and 60%RH or less.

   2.5 The LEDs should be used within 168 hours (7 days) after opening the package.

   2.6 If the moisture absorbent material (silica gel) has faded away or the LEDs have exceeded the storage time, baking treatment should be performed using the following conditions.
   Baking treatment : 60±5℃ for 48 hours.

3. Soldering Condition

   3.1 Pb-free solder temperature profile

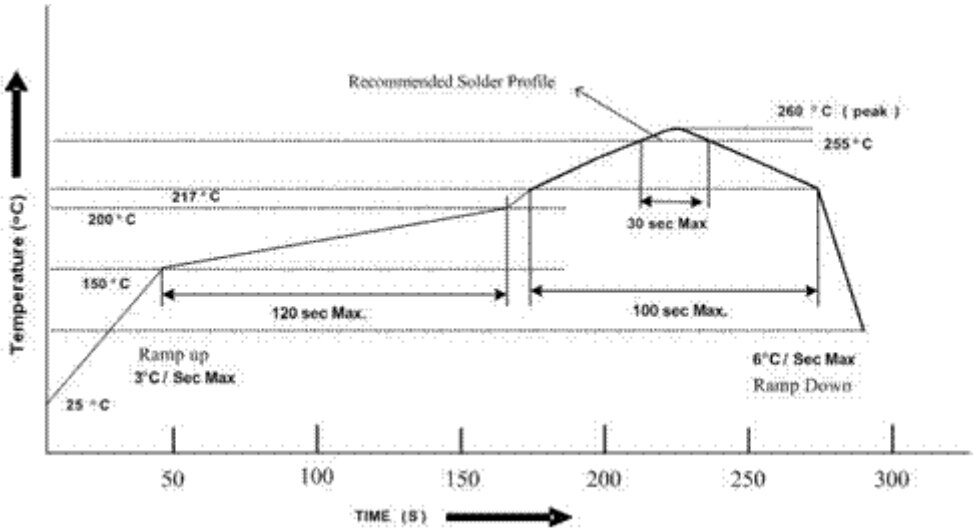

   3.2 Reflow soldering should not be done more than two times.

   3.3 When soldering, do not put stress on the LEDs during heating.

   3.4 After soldering, do not warp the circuit board.

Copyright © 2010, Everlight Americas Inc. All Rights Reserved. Release Date : 5/28/2013. Issue No: 1 Rev:1 www.everlightamericas.com

4. Soldering Iron

Each terminal is to go to the tip of soldering iron temperature less than 350℃ for 3 seconds within once in less than the soldering iron capacity 25W. Leave two seconds and more intervals, and do soldering of each terminal. Be careful because the damage of the product is often started at the time of the hand solder.

5. Repairing

Repair should not be done after the LEDs have been soldered. When repairing is unavoidable, a double-head soldering iron should be used (as below figure). It should be confirmed beforehand whether the characteristics of the LEDs will or will not be damaged by repairing.

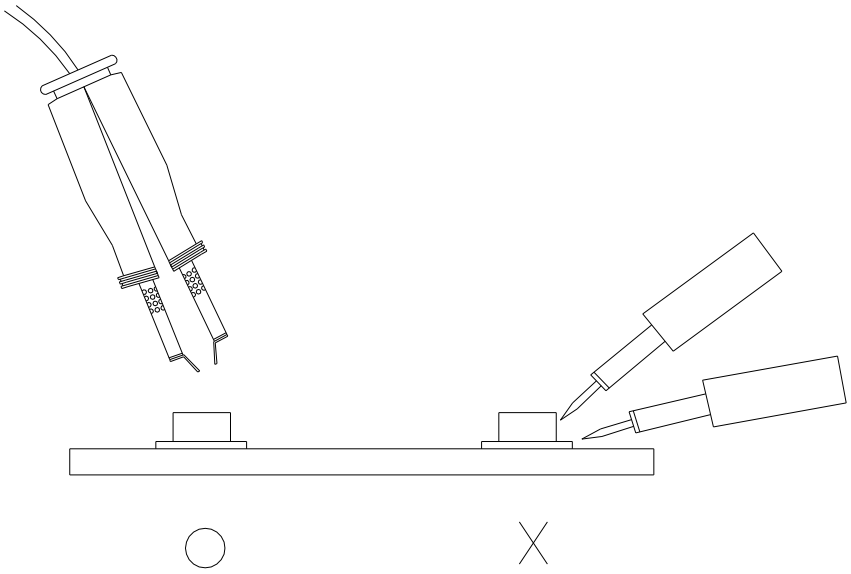

Copyright © 2010, Everlight Americas Inc. All Rights Reserved. Release Date : 5/28/2013. Issue No: 1 Rev:1 www.everlightamericas.com

Package Dimensions

1. Reel Dimensions

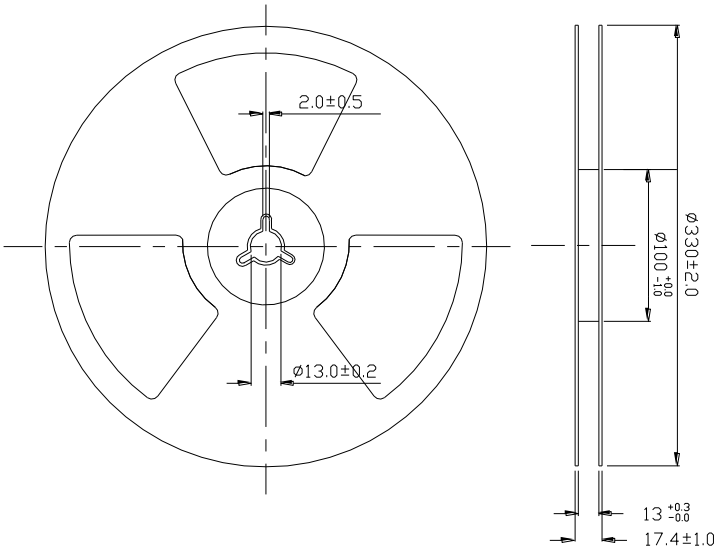

Note: The tolerances unless mentioned is ±0.1mm ,Unit = mm

2. Carrier Tape Dimensions:(Quantity: 4700pcs/reel)

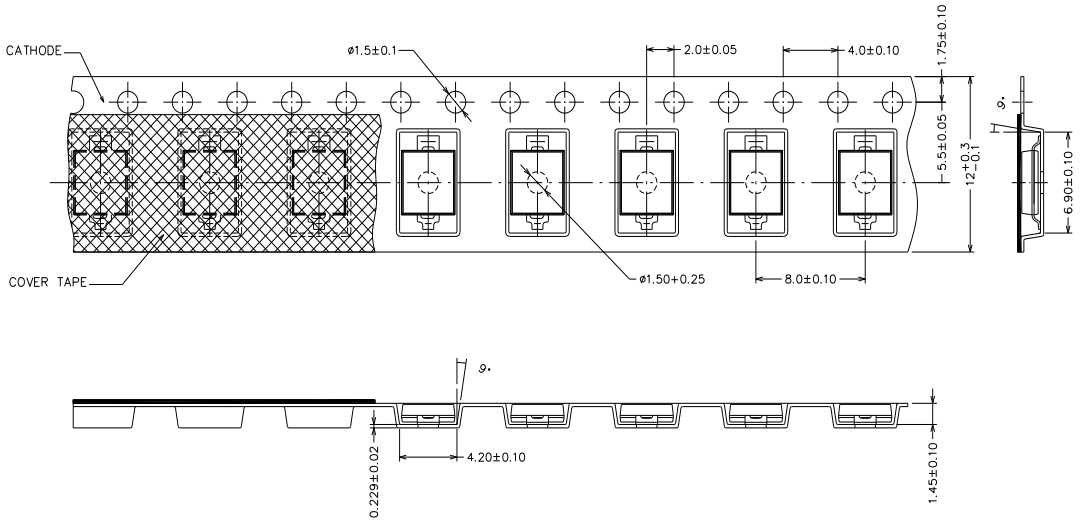

Note: The tolerances unless mentioned is ±0.1mm ,Unit = mm

Copyright © 2010, Everlight Americas Inc. All Rights Reserved. Release Date : 5/28/2013. Issue No: 1 Rev:1 www.everlightamericas.com

Packing Procedure

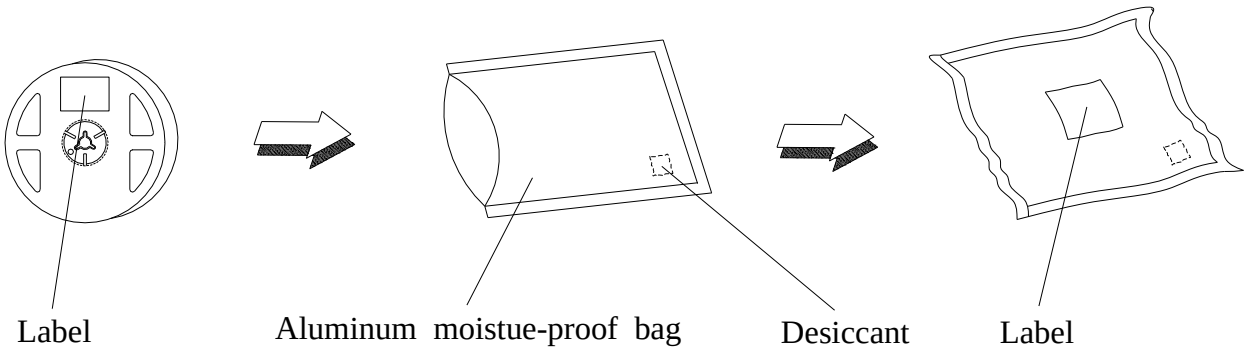

Label Form Specification

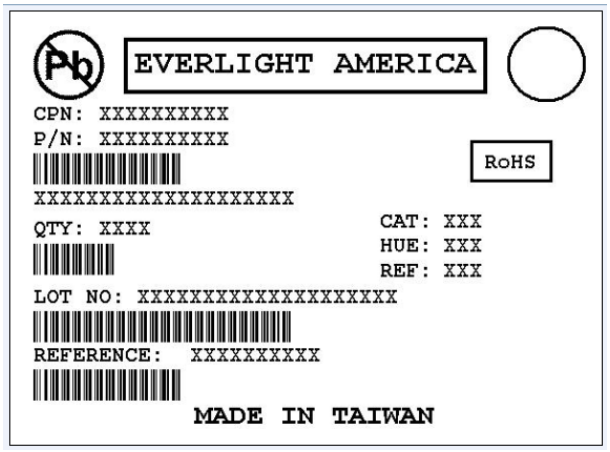

CPN: Customer's Production Number
P/N : Production Number
QTY: Packing Quantity
CAT: Ranks
HUE: Peak Wavelength
REF: Reference
LOT No: Lot Number

Notes

1. Above specification may be changed without notice. Everlight Americas will reserve authority on material change for above specification.
2. When using this product, please observe the absolute maximum ratings and the instructions for using outlined in these specification sheets. Everlight Americas assumes no responsibility for any damage resulting from use of the product which does not comply with the absolute maximum ratings and the instructions included in these specification sheets.
3. These specification sheets include materials protected under copyright of Everlight Americas corporation. Please don't reproduce or cause anyone to reproduce them without Everlight Americas's consent.

Copyright © 2010, Everlight Americas Inc. All Rights Reserved. Release Date : 5/28/2013. Issue No: 1 Rev:1 www.everlightamericas.com