E9225 series

HIGH PERFORMANCE



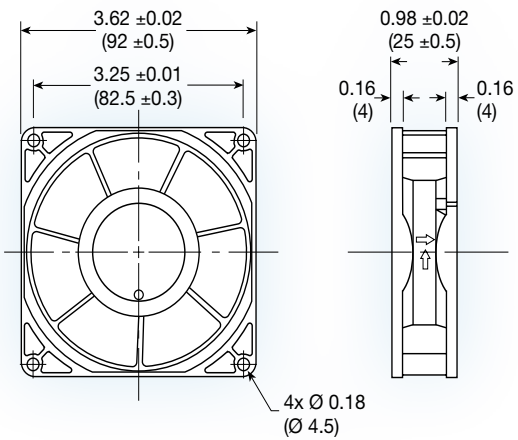

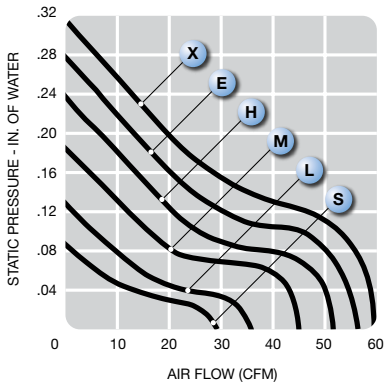

(92 x 92 x 25 mm)

3.62 x 3.62 x 0.98 inches

Construction:	UL94V-0 PBT impeller & frame
Bearing option:	ball bearing
Connection:	AWG 24, 1007 lead wires
Frame:	flanged
Protection:	thermal
Options:	tachometer output or locked rotor alarm signal; PWM speed control

Model No.	Rated Voltage	Current mA				Speed	Air Volume		Max. Static Pressure (H_2O)		Sound Noise	Weight
	V	5	12	24	48	RPM	M^3/Min.	CFM	MM	INCH	dbA	g
E9225S	5/12/24	270	98	60	-	2,000	0.82	29	2.25	0.09	24	111
E9225L	5/12/24	400	150	85	-	2,400	0.99	35	3.25	0.13	27	111
E9225M	5/12/24	560	235	125	-	2,800	1.24	44	4.75	0.19	32	111
E9225H	12/24/48	-	360	168	65	3,200	1.44	51	6.00	0.24	36	111
E9225E	12/24/48	-	498	255	85	3,600	1.58	56	7.00	0.28	39	111
E9225X	12/24/48	-	550	300	130	4,000	1.70	60	8.00	0.32	43	111