2 CHANNEL SWITCHED MODE CONSTANT CURRENT CONTROLLER E522.32/34

PRODUCTION DATA - JUL 29, 2016

RoHS compliant

Features

- Dual switched-mode, PWM LED controller
- 5V to 55V input voltage range, up to 80V boosted output voltage
- Boost-, SEPIC, Buck-Boost- or Buck Topology supported
- Constant Current Regulation implemented
- High-Precision Differential High-Side Sense up to 60V
- High-Frequency PWM Dimming Capability for constant LED Color
- Analog 10:1 Dimming Capability for LED Binning
- Integrated Softstart
- Advanced Error Detection (e.g. Over-Voltage, Open-Load Detection, different Shorts or GND Loss)
- Integrated Automotive LDOs for 5V & 3.3V
- AEC-Q100 Qualified
- Junction temperature range -40°C to +150°C

Applications

- Automotive LED lighting Applications (daytime running light, indicator, front- and rear light, interior lighting etc.)
- General Indoor and Outdoor Lighting and -Signals
- TFT Backlighting
- General Current driven Applications

General Description

E522.32 and E522.34 are part of a family of fixed frequency switched-mode high voltage LED power supplies and controllers with high efficiency. Integrated high-side sensing allows topologies related to the supply input (Boost-to-Battery) or to GND (Boost-to-GND).

The devices are suitable for operation in boost-, buck-boost-, SEPIC- and buck-topologies, particularly in harsh automotive environments.

The constant switching frequency is adjustable up to 600kHz by an external resistor or can be synchronized in Master-Slave configurations with other devices. The phase shift of 180° between channels essentially reduces EMI.
Multiple control- and monitoring functions, e.g. short- and open load detection, over-temperature shutdown and under-voltage lockout are implemented.

Ordering Information

Ordering-No.	Oscillator Spectrum	Softstart Ramping	Package
E52232A61C	spread	Slow Ramping (SR)	QFN32L5
E52232A61CXFR	spread	Fast Ramping (FR)	QFN32L5
E52234A61C	narrow	Slow Ramping (SR)	QFN32L5
E52234A61CXFR	narrow	Fast Ramping (FR)	QFN32L5

Typical Application Circuit

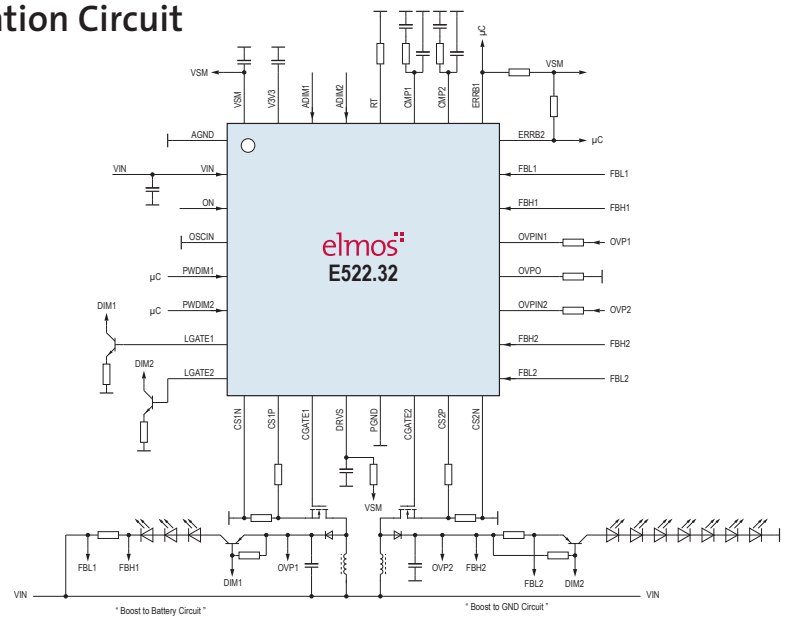

Elmos Semiconductor AG reserves the right to change the detail specifications as may be required to permit improvements in the design of its products.

Elmos Support

Headquarters
Elmos Semiconductor AG
Heinrich-Hertz-Str. 1
44227 Dortmund (Germany)
Phone: +49 (0) 231 / 75 49-100
Fax: +49 (0) 231 / 75 49-149
sales-germany@elmos.com
www.elmos.com

Sales and Application Support Office North America
Elmos NA. Inc.
32255 Northwestern Highway, Suite 220
Farmington Hills, MI 48334 (United States)
Phone: +1 (0) 248 / 8 65 32 00
Fax: +1 (0) 248 / 8 65 32 03
sales-usa@elmosna.com

Sales and Application Support Office China
Elmos Semiconductor Technology (Shanghai) Co., Ltd.
Unit 16B, 16F Zhao Feng World Trade Building,
No. 369 Jiang Su Road,
Chang Ning District,
Shanghai, PR China, 200050
Phone: +86 (0) 21 / 6210 0908
Fax: +86 (0) 21 / 6219 7502
sales-china@elmos.com

中国地区销售与应用支持

艾尔默斯半导体技术（上海）有限公司
中国 上海市 长宁区 江苏路369号
兆丰世贸大厦16楼 16B单元，200050
电话: +86 (0) 21 / 6210 0908
传真: +86 (0) 21 / 6219 7502
sales-china@elmos.com

Sales and Application Support Office Korea
Elmos Korea
B-1007, U-Space 2, #670 Daewangpangyo-ro,
Sampyoung-dong, Bunddang-gu, Sungnam-si
Kyounggi-do 463-400 Korea
Phone: +82 (0)31 / 7 14 11 31
Fax: +82 (0)31 / 6 28 10 90
sales-korea@elmos.com

Sales and Application Support Office Japan
Elmos Japan K.K.
BR Shibaura N Bldg. 7F
3-20-9 Shibaura, Minato-ku,
Tokyo 108-0023 Japan
Phone: +81 3 / 3451-7101
Fax: +81 3 / 3451-7104
sales-japan@elmos.com

Sales and Application Support Office Singapore
Elmos Semiconductor Singapore Pte Ltd.
3A International Business Park
#09-13 ICON@IBP
609935 Singapore
Phone: +65 (0) 6908 1261
Fax: +65 (0) 6570 5906
sales-singapore@elmos.com

Note: *Elmos Semiconductor AG (below Elmos) reserves the right to make changes to the product contained in this publication without notice. Elmos assumes no responsibility for the use of any circuits described herein, conveys no licence under any patent or other right, and makes no representation that the circuits are free of patent infringement. While the information in this publication has been checked, no responsibility, however, is assumed for inaccuracies. Elmos does not recommend the use of any of its products in life support applications where the failure or malfunction of the product can reasonably be expected to cause failure of a life-support system or to significantly affect its safety or effectiveness. Products are not authorized for use in such applications.*

Copyright © 2016 *Elmos Reproduction, in part or whole, without the prior written consent of Elmos, is prohibited.*