OMRON

M18 Cylindrical Photoelectric

E3F2

Threaded Cylindrical M18 Size Sensors with Built-in Amplifier



- Rugged stainless and nickel plated brass versions
- Chemical resistant, ABS resin case type
- Polarized models
- Compact and space-saving
- Long detection distance (7 m)
- DC switching types with connectors for easy maintenance
- Wide operating voltage range (10 to 30 VDC, or 24 to 240 VAC)
- Short-circuit and reverse connection protection (DC switching type)
- UL, CSA listed and CE marked

Ordering Information

■ SENSORS

Supply	Type	Connection	Output	Range	Housing	Part number
AC	Through-beam	Pre-leaded	Light-On	3 m	Plastic	**E3F2-3Z1**
			Dark-On		Plastic	**E3F2-3Z2**
	Retroreflective, Non-polarized		Light-On	2 m	Plastic	**E3F2-R2Z1**
			Dark-On		Plastic	**E3F2-R2Z2**
	Diffuse		Light-On	100 mm	Plastic	**E3F2-DS10Z1N**
			Dark-On		Plastic	**E3F2-DS10Z2N**
DC	Through-beam	Connector	NPN	7 m	Plastic	**E3F2-7C4-P1**
					NPB	**E3F2-7C4-M1–C**
					SS	**E3F2-7C4-M1-S**
			PNP		Plastic	**E3F2-7B4-P1**
					NPB	**E3F2-7B4-M1-C**
					SS	**E3F2-7B4-M1-S**
	Diffuse		NPN	10 cm	NPB	**E3F2-DS10C4-M1-C**
					SS	**E3F2-DS10C4-M1-S**
					Plastic	**E3F2-DS10C4-P1**
				30 cm	Plastic	**E3F2-DS30C4-P1**

Note: NPB = Nickel plated brass; SS = Stainless steel

(This table continues on the next page.)

Ordering Information Table – continued from previous page

Supply	Type	Connection	Output	Range	Housing	Part number
DC	Diffuse	Connector	PNP	10 cm	NPB	**E3F2-DS10B4-M1-C**
					SS	**E3F2-DS10B4-M1-S**
					Plastic	**E3F2-DS10B4-P1**
				30 cm	Plastic	**E3F2-DS30B4-P1**
	Retroreflective, Non-polarized		NPN	2 m	Plastic	**E3F2-R2C4-P1**
			PNP		Plastic	**E3F2-R2B4-P1**
	Retroreflective, Polarized		NPN		NPB	**E3F2-R2RC4-M1-C**
					SS	**E3F2-R2RC4-M1-S**
			PNP		NPB	**E3F2-R2RB4-M1-C**
					SS	**E3F2-R2RB4-M1-S**
	Through-beam	Pre-leaded	NPN	7 m	Plastic	**E3F2-7C4**
					NPB	**E3F2-7C4-C**
					SS	**E3F2-7C4-S**
			PNP	7 m	Plastic	**E3F2-7B4**
					NPB	**E3F2-7B4-C**
					SS	**E3F2-7B4-S**
	Diffuse		NPN	10 cm	NPB	**E3F2-DS10C4-C**
					Plastic	**E3F2-DS10C4-N**
					SS	**E3F2-DS10C4–S**
				30 cm	Plastic	**E3F2-DS30C4**
			PNP	10 cm	NPB	**E3F2-DS10B4-C**
					Plastic	**E3F2-DS10B4-N**
					SS	**E3F2-DS10B4-S**
				30 cm	Plastic	**E3F2-DS30B4**
	Retroreflective, Non-polarized		NPN	2 m	Plastic	**E3F2-R2C4**
			PNP		Plastic	**E3F2-R2B4**
	Retroreflective, Polarized		NPN	2 m	NPB	**E3F2-R2RC4-C**
					SS	**E3F2-R2RC4-S**
			PNP		NPB	**E3F2-R2RB4-C**
					SS	**E3F2-R2RB4-S**

Note: NPB = Nickel plated brass; SS = Stainless steel

■ ACCESSORIES (ORDER SEPARATELY)

Description	Part number
Sensor mounting bracket	**Y92E-B18**
Lens protector kit (glass plate, two gaskets and metal retainer)	**E39-F31**
Small corner cube reflector (38 H x 20 W x 11 D mm)	**E39-R3**
Adhesive backed reflector tape (10 H x 35 W x 0.7 D mm)	**E39-RSA**
Adhesive backed reflector tape (35 H x 40 W x 0.7 D mm)	**E39-RSB**
Mounting bracket for E39-R1 reflector	**E39-L7**
Right angle adapter for through-beam and retroreflective E3F2 sensors	**E39-RU1**

■ CONNECTOR CORDSETS

Connector type	Cable size	Length	Straight connector	Right angle connector
4-wire DC Micro Change® connector	22 AWG	2 m (6.56 ft)	**Y96E-44SD2**	**Y96E-44RD2**
		5 m (16.40 ft)	**Y96E-44SD5**	**Y96E-44RD5**
		10 m (32.8 ft)	**Y96E-44SD10**	**Y96E-44RD10**
Robotic cable with M12 connector		2 m (6.56 ft)	**XS2F-D421-D80-R**	**XS2F-D422-D80-R**
		5 m (16.40 ft)	**XS2F-D421-G80-R**	**XS2F-D422-G80-R**

■ REPLACEMENT PARTS

Description	Part number
Reflector for E3F2-R2□4 retroreflective sensors	**E39-R1**
Two plastic M18 mounting nuts	**E3F-PHWS**

Specifications

■ DC SWITCHING MODELS

Part number		**E3F2-7C4-□, E3F2-7B4-□**	**E3F2-R2C4-□, E3F2-R2B4-□**	**E3F2-R2RC4-□, E3F2-R2RB4-□**	**E3F2-DS10C4-□, E3F2-DS10B4-□**	**E3F2-DS30C4-□, E3F2-DS30B4-□**
Method of detection		Through-beam	Retroreflective		Diffuse	
			Non-polarized	Polarized		
Sensing range		7 m (22.96 ft)	2 m (6.56 ft)	2 m (6.56 ft)	10 cm (3.94 in)	30 cm (11.81 in)
Standard target		11 x 11 mm	56 x 56 mm		5 x 5 cm 90% Kodak White Card	10 x 10 cm 90% Kodak White Card
Supply voltage		10-30 VDC 10% maximum permissible ripple, peak-to-peak				
Output		NPN or PNP open collector, 100 mA, residual voltage 2 V max. at 100 mA				
Current consumption		45 mA max.	25 mA max.			
Response time		2.5 ms max.				
Stabilization on Powerup		50 ms				
Ambient temperature	Operating	–25°C to 55°C (–13°F to 131°F) with no icing				
	Storage	–30°C to 70°C (–22°F to 158°F)				
Ambient light immunity		Incandescent: 3,000 ℓx; Sunlight: 10,000 ℓx				
Relative humidity	Operating	35% to 85% RH, no condensation				
	Storage	35% to 95% RH				
Insulation resistance		20 MΩ at 500 VDC				
Dielectric strength		1,000 VAC, 50/60 Hz for 1 min. between current carrying parts and case				
Vibration		10 to 55 Hz 1.5 mm double amplitude 1 hr each in X, Y, Z axes				
Shock		500 m/s^2 (approx. 50 G)				
Enclosure		IP67, NEMA 6 for metal versions; IP66 NEMA, 4 for plastic versions				
Light source		Infrared LED		Red LED	Infrared LED	
Indicators		Power and light received LEDs				
Sensitivity adjustment		Fixed				Adjustable
Operation mode		Light-ON or Dark-ON selectable with control wire				
Weight	Metal	Pre-leaded 100 g; connector: 60 g				
	Plastic	Pre-leaded 85 g; connector: 40 g				
Circuit protection		Output short-circuit and reverse polarity				
Materials	Lens	Plastic				
	Housing	Plastic (ABS), nickel plated brass, stainless steel	Plastic	Nickel plated brass, stainless steel	Plastic (ABS), nickel plated brass, stainless steel	
	Cable sheath	PVC				

■ AC MODELS

Part number		E3F2-3Z1, E3F2-3Z2	E3F2-R2Z1, E3F2-R2Z2	E3F2-DS10Z1N, E3F2-DS10Z2N
Method of detection		Through-beam	Retroreflective	Diffuse
Sensing range		3 m (9.84 ft)	2 m (6.56 ft)	10 cm (3.94 in)
Standard target		11 mm	56 mm	10 x 10 cm 90% Kodak white card
Supply voltage		24–240 VAC ±10%, 50/60 Hz		
Output		SCR 200 mA max.; residual voltage 5 V max. at 200 mA		
Power consumption		10 mA max.	5 mA max.	
Response time		30 ms max.		
Stabilization on Powerup		100 ms		
Ambient temperature	Operating	–25°C to 55°C (–13°F to 131°F) with no icing		
	Storage	–30°C to 70°C (–22°F to 158°F)		
Ambient light immunity		Incandescent: 3,000 ℓx; sunlight: 10,000 ℓx		
Relative humidity	Operating	35% to 85% RH, no condensation		
	Storage	35% to 95% RH		
Insulation resistance		20 MΩ at 500 VDC between current carrying parts and case		
Dielectric strength		1,500 VAC, 50/60 Hz for 1 min. between current carrying parts and case		
Vibration		10 to 55 Hz 1.5 mm double amplitude 2 hrs each in X, Y, Z axes		
Shock		500 m/s^2 (approx. 50 G)		
Enclosure		IP66, NEMA 1, 2, 4 (indoor)		
Light source		Infrared LED		
Indicators		Power and light received LEDs		
Sensitivity adjustment		Fixed		
Operation mode		Light-ON (Z1 models) or Dark-ON (Z2 models)		
Weight	Pre-leaded models	110 g		
	Connector models	55 g		
Circuit protection		—		
Materials	Lens	Acrylate resin		
	Housing	Plastic ABS		
	Cable sheath	PVC		

Engineering Data

■ OPERATING RANGE (TYPICAL)

E3F2-3□□-□□ (Through-beam)

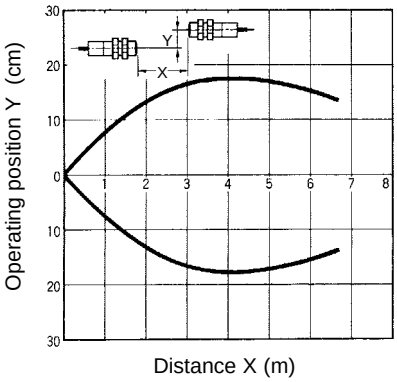

E3F2-R2□□-□□ (Retroreflective)

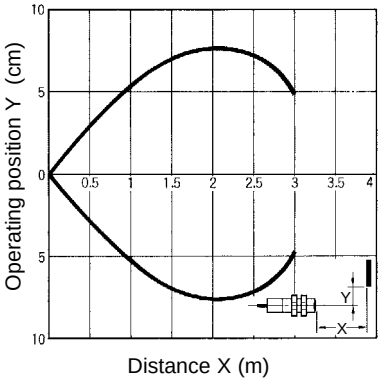

E3F2-3 and E39-RU1 (Right angle adapter)

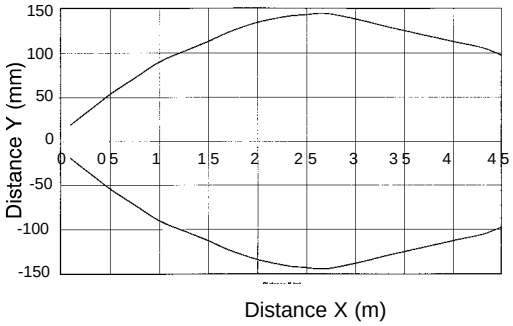

E3F2-R2 and E39-RU1 (Right angle adapter)

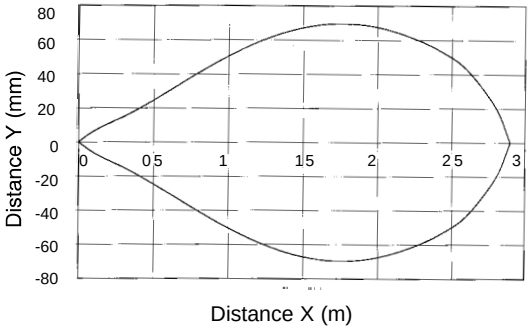

E3F2-7□-4□ (Through-beam)

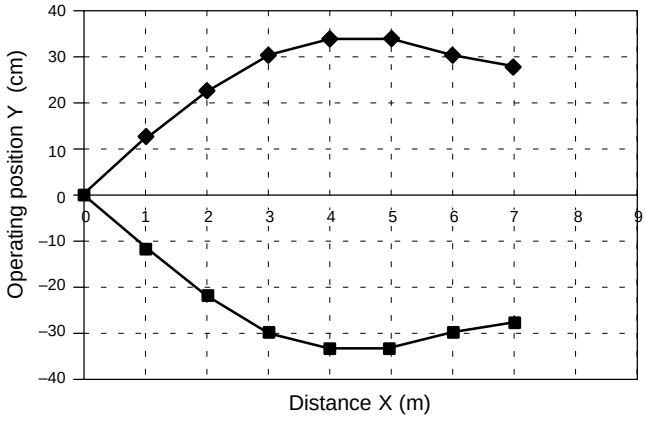

E3F2-R2R□-4□ (Polarized, retroreflective)

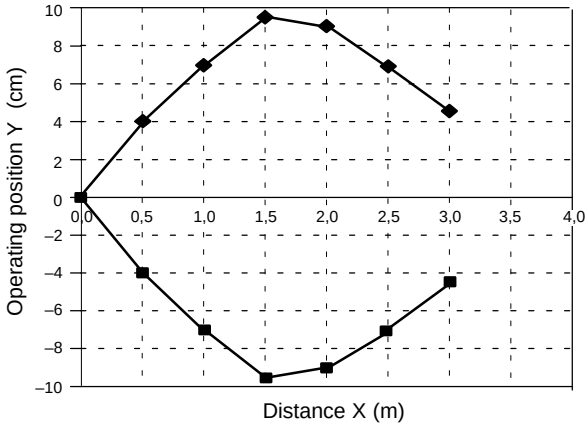

E3F2-DS10□4-N
E3F2-DS10□4-P1

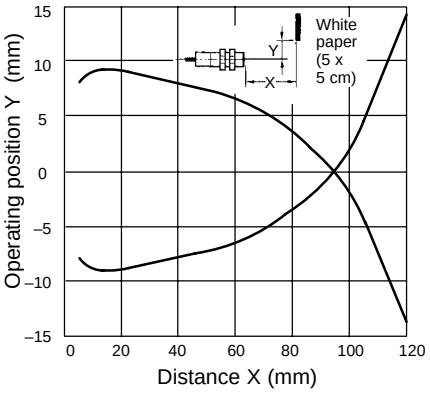

E3F2-DS30□□-□□ (Diffuse)

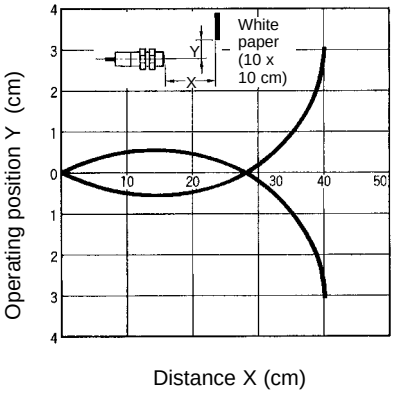

■ EXCESS GAIN VS. SET DISTANCE (TYPICAL)

E3F2-3□□-□□ (Through-beam)

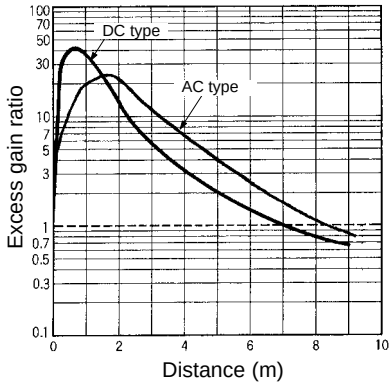

E3F2-R2□□-□□ (Retroflective, Non-polarized)

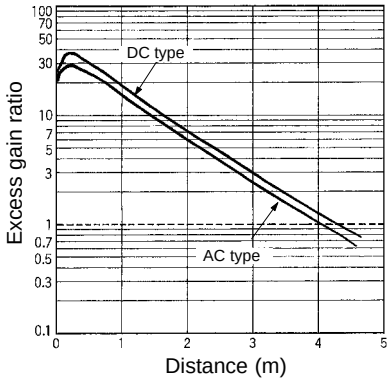

E3F2-3 and E39-RU1 (Right angle adapter)

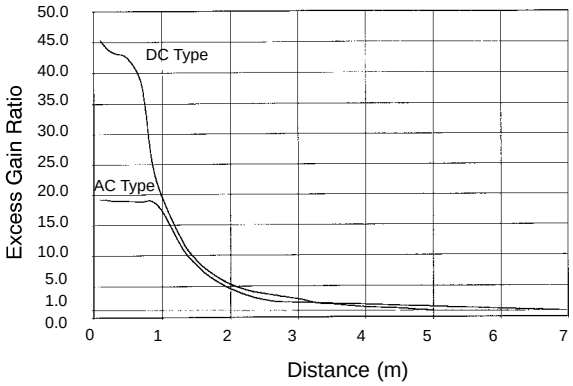

E3F2-R2 and E39-RU1 (Right angle adapter)

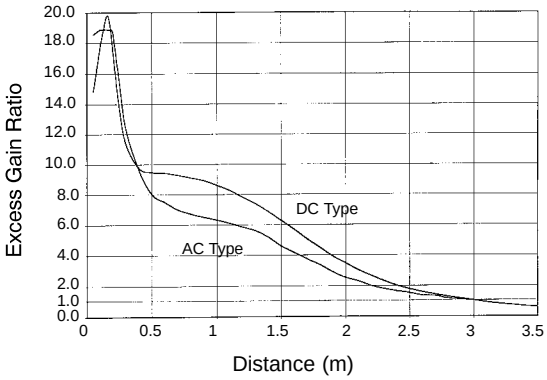

E3F2-7□4-□ (Through beam)

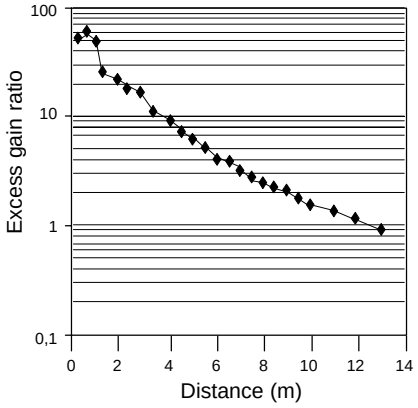

E3F2-R2R□4-□ (Polarized retroreflective)

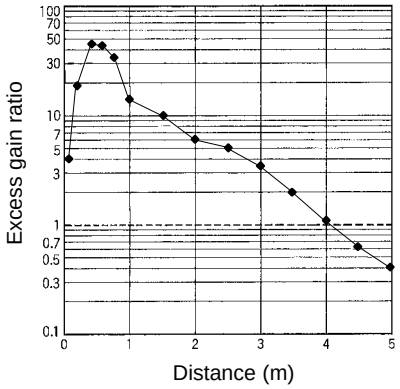

■ EXCESS GAIN VS. SET DISTANCE

E3F2-DS10Z□-N

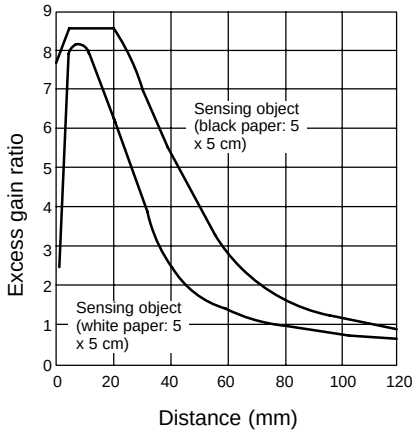

E3F2-DS10□4-N
E3F2-DS10□4-P1

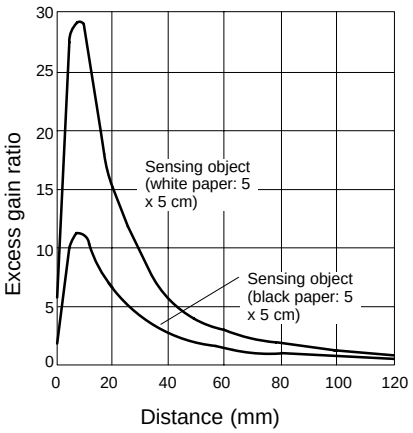

E3F2-DS30□4
E3F2-DS30□4-P1

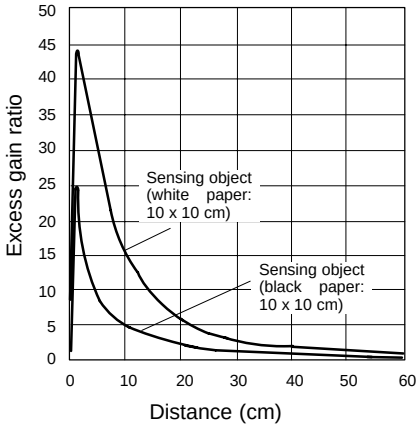

Operation

■ OUTPUT CIRCUITS

Configuration	Model	Connection method	Output transistor	Output circuit
NPN pre-wired	E3F2-7C4 E3F2-7C4-M E3F2-7C4-C E3F2-7C4-S E3F2-R2C4 E3F2-R2RC4-M E3F2-R2RC4-C E3F2-R2RC4-S E3F2-DS10C4-N E3F2-DS10C4-M E3F2-DS10C4-C E3F2-DS10C4-S E3F2-DS30C4 E3F2-DS30C4-M E3F2-DS30C4-S	Connect the pink and brown wires or open the pink wire.	ON when light is incident. (Light-ON)	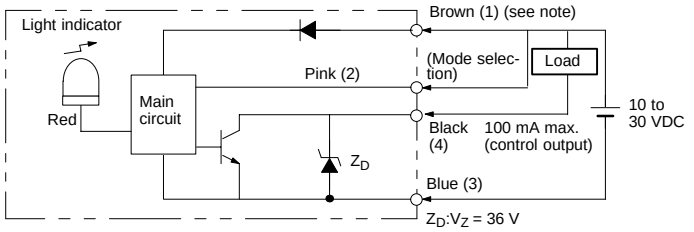
		Connect the pink and blue wires.	ON when light is interrupted. (Dark-ON)	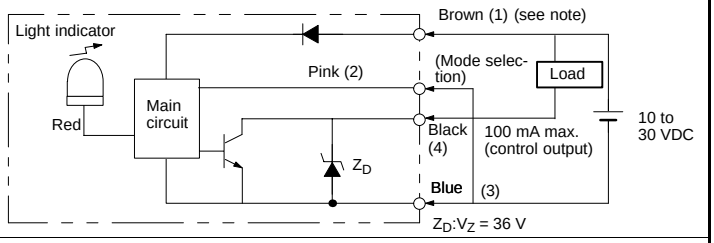
PNP pre-wired	E3F2-7B4 E3F2-7B4-M E3F2-7B4-C E3F2-7B4-S E3F2-R2B4 E3F2-R2RB4-M E3F2-R2RB4-C E3F2-R2RB4-S E3F2-DS10B4-N E3F2-DS10B4-M E3F2-DS10B4-C E3F2-DS10B4-S E3F2-DS30B4 E3F2-DS30B4-M E3F2-DS30B4-S	Connect the pink and brown wires or open the pink wire.	ON when light is incident. (Light-ON)	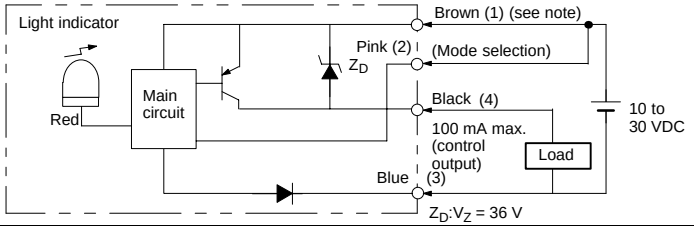
		Connect the pink and blue wires.	ON when light is interrupted. (Dark-ON)	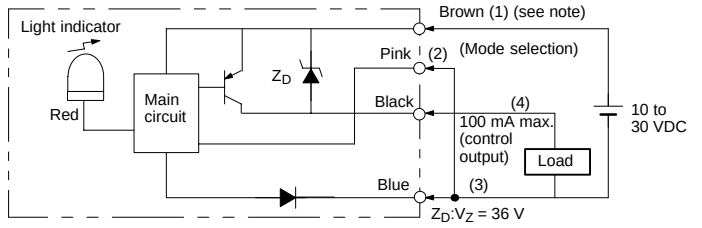
NPN connector	E3F2-7C4-P1 E3F2-7C4-M1-M E3F2-7C4-M1-C E3F2-7C4-M1-S E3F2-R2C4-P1 E3F2-R2RC4-M1-M E3F2-R2RC4-M1-C E3F2-R2RC4-M1-S E3F2-DS10C4-P1 E3F2-DS10C4-M1-M E3F2-DS10C4-M1-C E3F2-DS10C4-M1-S E3F2-DS30C4-P1 E3F2-DS30C4-M1-M E3F2-DS30C4-M1-S	Connect the pink and brown wires or open the pink wire.	ON when light is incident. (Light-ON)	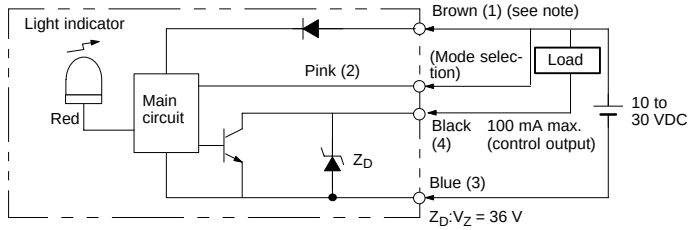
		Connect the pink and blue wires.	ON when light is interrupted. (Dark-ON)	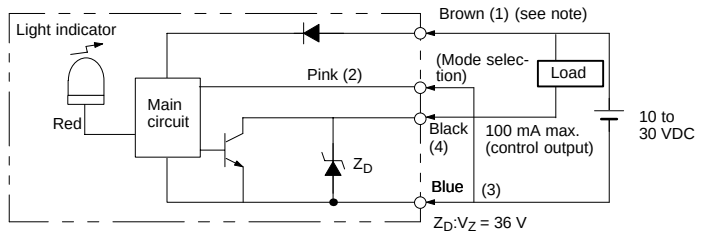

Note: Terminal numbers are for connector types.

(This table continues on the next page.)

Operation Table – continued from previous page

Configuration	Model	Connection method	Output transistor	Output circuit
PNP connector	E3F2-7B4-P1 E3F2-7B4-M1-M E3F2-7B4-M1-C E3F2-7B4-M1-S E3F2-R2B4-P1 E3F2-R2RB4-M1-M E3F2-R2RB4-M1-C E3F2-R2RB4-M1-S E3F2-DS10B4-P1 E3F2-DS10B4-M1-M E3F2-DS10B4-M1-C E3F2-DS10B4-M1-S E3F2-DS30B4-P1 E3F2-DS30B4-M1-M E3F2-DS30B4-M1-S	Connect the pink and brown wires or open the pink wire.	ON when light is incident. (Light-ON)	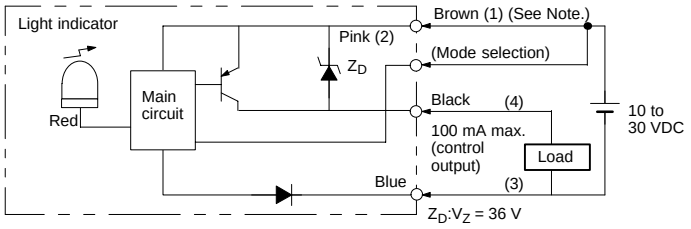
		Connect the pink and blue wires.	ON when light is interrupted. (Dark-ON)	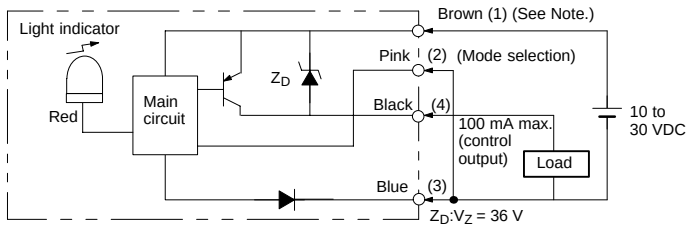
AC switching	E3F2-3Z1 E3F2-R2Z1 E3F2-DS10Z1-N	--- (Fixed)	ON when light is incident. (Light-ON)	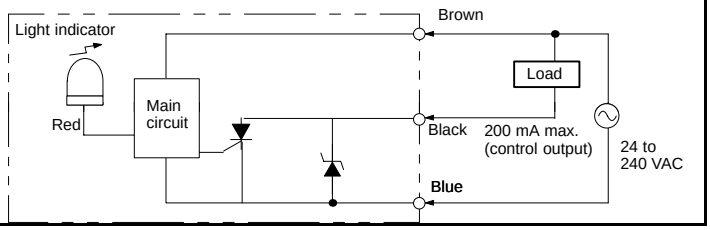
	E3F2-3Z2 E3F2-R2Z2 E3F2-DS10Z2-N		ON when light is interrupted. (Dark-ON)	

Note: Terminal numbers are for connector types.

■ TIMING CHART

Light-ON Mode

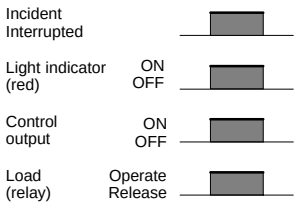

Dark-ON Mode

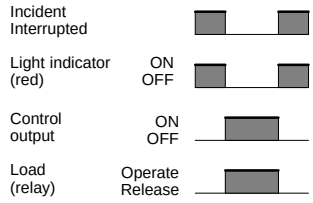

Terminals/Connections

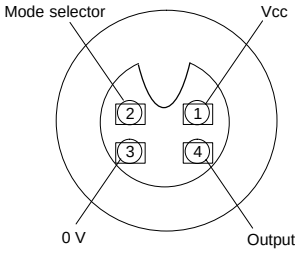

Dimensions

Unit: mm (inch)

■ PRE-LEADED DC MODELS

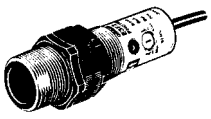

E3F2-7□4-□
E3F2-DS10□4-□
E3F2-DS30□4
E3F2-R2□4
E3F2-R2R□4-□

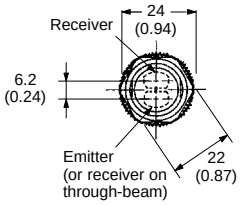

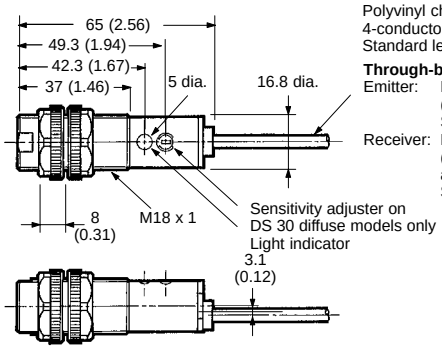

Diffuse and Retroreflective (DC)
Polyvinyl chloride-covered cord, 4-mm dia. (18/0.12), 4-conductor (brown, blue, black, and pink)
Standard length: 2 m

Through-beam (DC)
Emitter: Polyvinyl chloride-covered cord, 4-mm dia. (18/0.12), 2-conductor (brown and blue)
Standard length: 2 m
Receiver: Polyvinyl chloride-covered cord, 4-mm dia. (18/0.12), 4-conductor (brown, blue, black, and pink)
Standard length: 2 m

■ CONNECTOR DC MODELS

E3F2-7L-P1
E3F2-7D-P1
E3F2-7C4-P1, -M1-□
E3F2-DS10□4-P1, -M1□
E3F2-DS30□4-P1, -M1□
E3F2-R2□-P1
E3F2-R2R□-M1-□

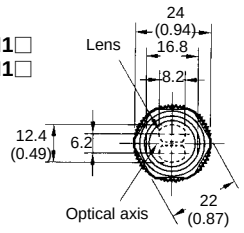

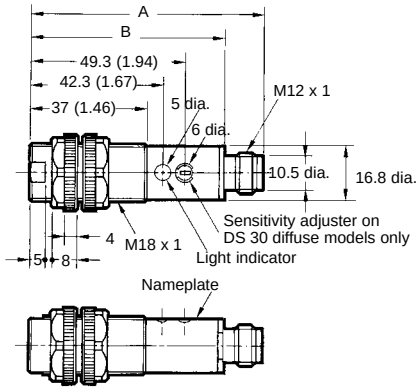

	Metal body	Plastic body
	E3F2-DS□□□□-□1	E3F2-DS30□4-P1
A	76 (2.99)	73 (2.87)
B	65.5 (2.58)	61.7 (2.43)

■ AC MODELS

E3F2-3Z1, E3F2-3Z2
E3F2-R2Z1, E3F2-R2Z2
E3F2-DS10Z1-N,
E3F2-DS10Z2-N

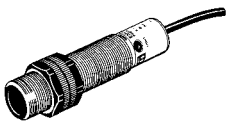

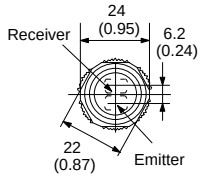

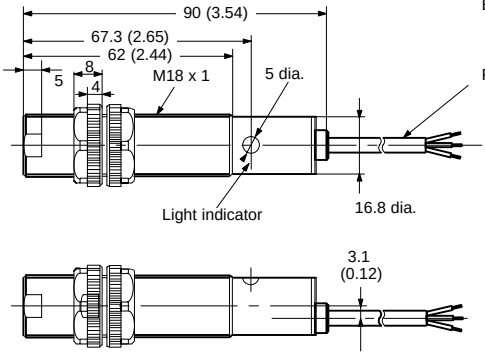

Through-beam (AC)
Emitter: Polyvinyl chloride-covered cord, 4-mm dia. (11/0.16), 2-conductor (brown and blue)
Standard length: 2 m
Receiver: Polyvinyl chloride-covered cord, 4-mm dia. (11/0.16), 3-conductor (brown, blue, and black)
Standard length: 2 m

Diffuse and Retroreflective (AC)
Vinyl insulated round cord, 4-mm dia. (11/0.16), 3-conductor (brown, blue, and black)
Standard length: 2 m

■ ACCESSORIES

E39-R1 Reflector (included with retroreflective units)

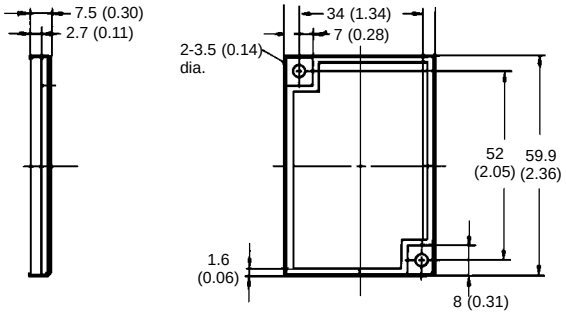

E39-L7 Reflector Adapter (order separately)

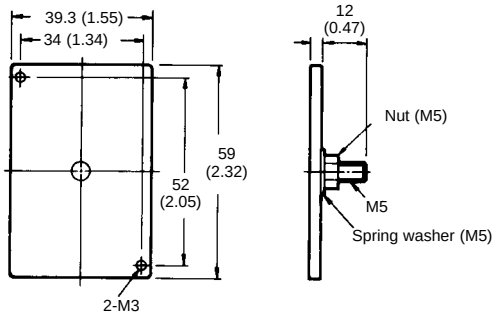

E39-R3 Reflector (order separately)

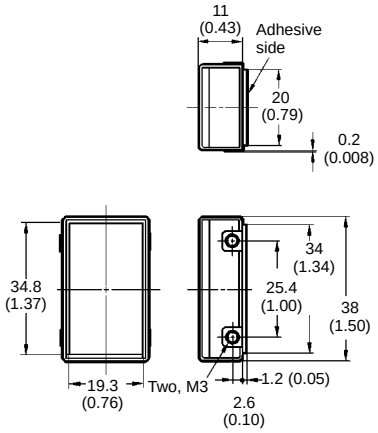

Mounting Bracket for E39-R3 (included with E39-R3)

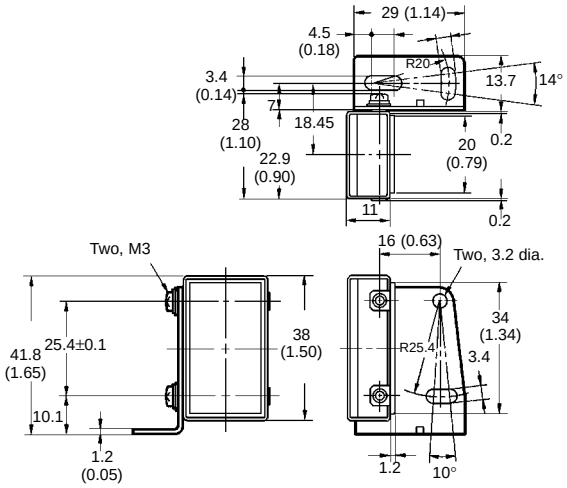

E39-RSA Reflector

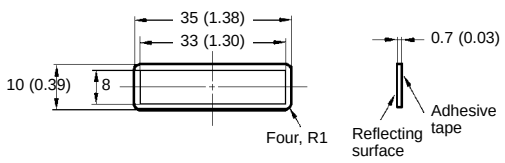

E39-RSB Reflector

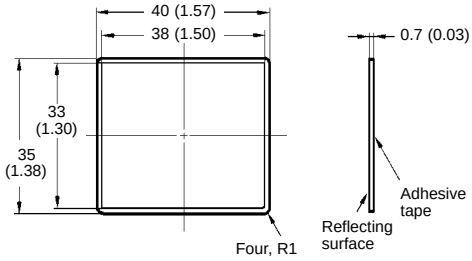

E39-RU1 Right Angle Adapter

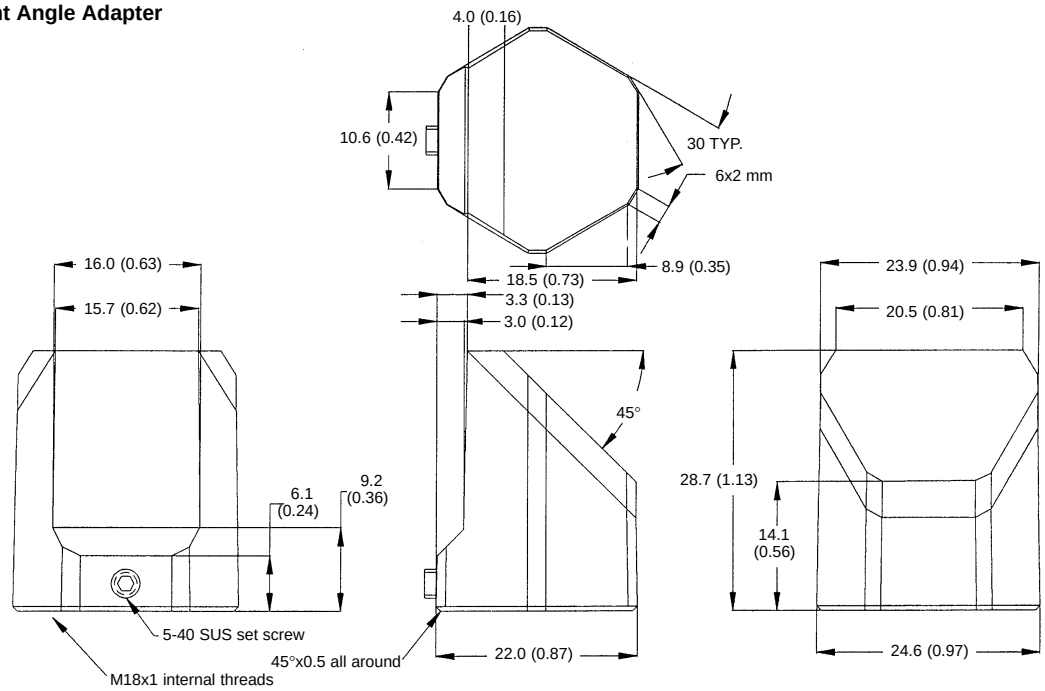

Mounting E39-RU1

Do not exceed a torque value of 20 kg • cm (2.0 N • m, 17.4 in • lbs) when tightening the adapter onto the sensor.

Use a 1/16” (1.5 mm) hex key on the set screw to secure the adapter to the E3F2. Do not exceed a torque of 3.5 kg • cm (0.35 N • m, 3.0 in • lbs). When set properly, the set screw will still extend beyond the adapter wall. Make sure to loosen the set screw before removing the adapter from the sensor.

Y92E-B18 Mounting Bracket

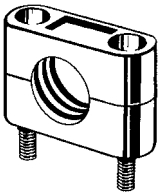

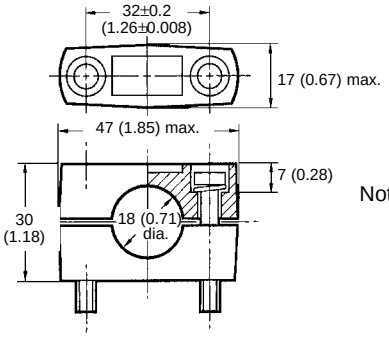

Note: Hexagonal nut: M5 x 32
Material: plastic

E39-F31 Lens Cap

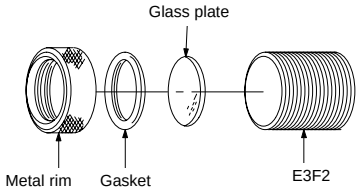

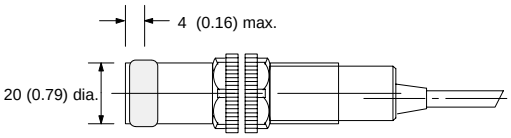

■ OPTIONAL CONNECTOR CABLES

Straight Connector Cable

Y96E-44SD□

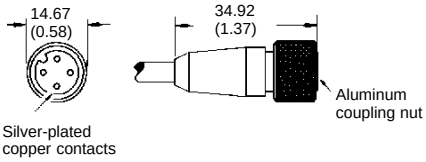

22 AWG, PVC jacketed cable rated for 300 V, 90°C:
2 m (6.56 ft) length for Y96E-44SD2
5 m (16.40 ft) length for Y96E-44SD5
10 m (32.81 ft) length for Y96E-44SD10

Right Angle Connector Cable

Y96E-44RD□

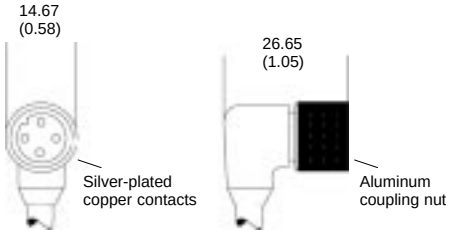

22 AWG, PVC jacketed cable rated for 300 V, 90°C:
2 m (6.56 ft) length for Y96E-44RD2
5 m (16.40 ft) length for Y96E-44RD5
10 m (32.81 ft) length for Y96E-44RD10

Note: Cable may be extended to a maximum of 200 m (656 ft.)

Terminals/Connections

Pin configuration NPN

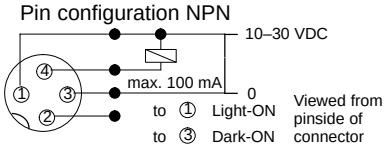

Pin configuration PNP

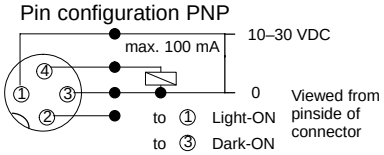

Assembly Directions

Insert the M12 threaded end of the sensor into socket of connector so that the notch correctly aligns the pins. Tighten the coupling nut by hand, not using a tool, until all the threads on the rear of the sensor are covered. This assures a positive connection, important for installations with vibration.

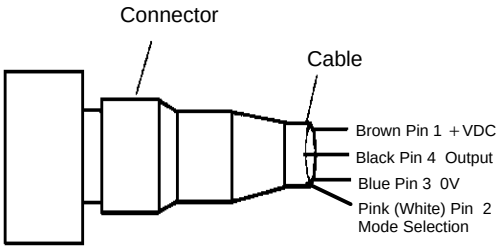

Note: Water tightness with connector is only valid when authorized connections are used. Cordset wire colors are shown in parentheses.

Precautions

If the input/output lines of the Photoelectric Sensor are placed in the same conduit or duct as power lines or high-voltage lines, the Photoelectric Sensor could be induced to malfunction, or even be damaged, by electrical noise. Separate the wiring, or use shielded lines as input/output lines to the Photoelectric Sensor.

Do not subject the Photoelectric Sensor to excessive shock when mounting, in keeping with IEC60529 IP66 standards.

Do not connect the black wire to the brown wire without a load. Direct connection of these wires may damage the Photoelectric Sensor (AC switching type).

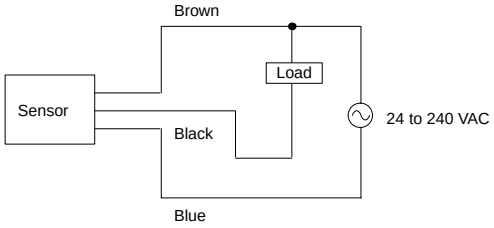

⚠ WARNING

The E3F2 Photoelectric Sensor is not a safety component for ensuring the safety of people which is defined in EC Directive (91/368/EEC) and covered by separate European standards or by any other regulations or standards.

When using the Photoelectric Sensor in the vicinity of an inverter motor, be sure to connect the ground wire of the motor to earth. Failure to ground the motor may result in malfunction of the Sensor.

When using the Photoelectric Sensor at temperatures over 45°C, the load current must be within the rated value shown in the figure below.

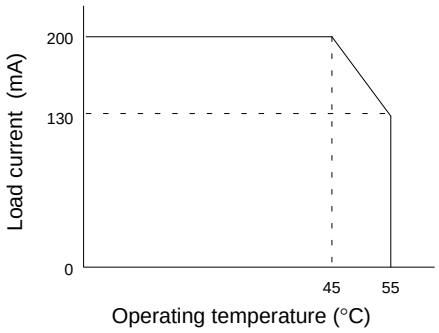

■ MOUNTING

Do not exceed a torque of

- 2.0 N • m {20 kgf • cm} 17.7 in • lb when tightening mounting nuts for plastic models.
- 20.0 N • m {200 kgf • cm} 177 in • lb when tightening mounting nuts for metal models.

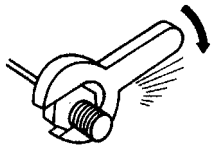

NOTE: DIMENSIONS SHOWN ARE IN MILLIMETERS. To convert millimeters to inches divide by 25.4.

OMRON®

OMRON ELECTRONICS, INC.
One East Commerce Drive
Schaumburg, IL 60173
1-800-55-OMRON

OMRON CANADA, INC.
885 Milner Avenue
Scarborough, Ontario M1B 5V8
416-286-6465

Cat. No. CEDSAX3 10/99 Specifications subject to change without notice. Printed in U.S.A.