HAMAMATSU

PHOTON IS OUR BUSINESS

D TYPE SOCKET ASSEMBLIES
E10679, E10679-50

The E10679 and E10679-50 are D-type socket assemblies for the R9880U series metal package photomultiplier tubes.
The E10679 has an output cable, while the E10679-50 has output pins for mounting on a circuit board.

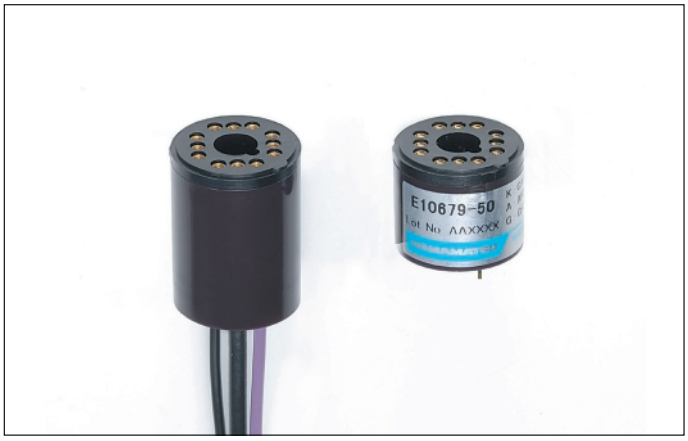

Left: E10679, Right: E10679-50

FEATURES

- **Cable Output and Pin Output**
- **Compact and Lightweight**

SPECIFICATIONS

Parameter		E10679	E10679-50	Unit
Grounded Electrode / Supply Voltage Polarity		Anode / Negative		—
Max. Insulation Voltage Between Case and Terminals		1100		V
Max. Supply Voltage Between Power Supply Terminals		1100		V
Max. Voltage Divider Current (at Max. Power Supply Voltage)		0.32		mA
Power Consumption (at Max. Power Supply Voltage)		350		mW
Insulation Resistance Between Case and Terminals	Min.	1×10^{-11}		Ω
Leakage Current in Signal	Max.	1×10^{-10}		A
Total Voltage Divider Resistance		3.46		MΩ
Max. Linear Output in DC Mode (at Max. Power Supply Voltage)		16		μA
Signal Output		DC/Pulse		—
Operating Ambient Temperature		0 to +50		°C
Storage Temperature		-15 to +60		°C
Weight		15	4.8	g

CIRCUIT DIAGRAMS

E10679

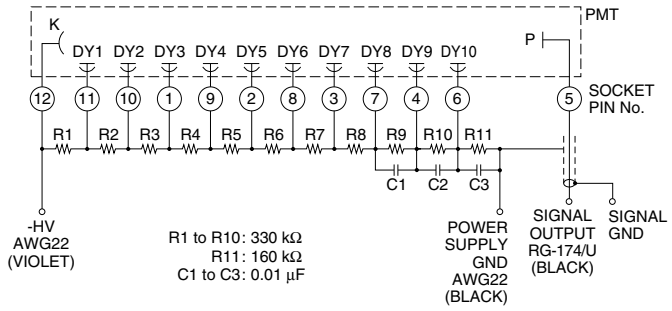

E10679-50

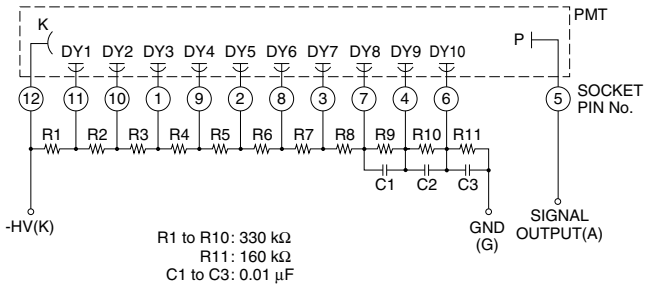

Subject to local technical requirements and regulations, availability of products included in this promotional material may vary. Please consult with our sales office.
Information furnished by HAMAMATSU is believed to be reliable. However, no responsibility is assumed for possible inaccuracies or omissions. Specifications are subject to change without notice. No patent rights are granted to any of the circuits described herein. ©2012 Hamamatsu Photonics K.K.

Dimensional Outline (Unit: mm)

E10679

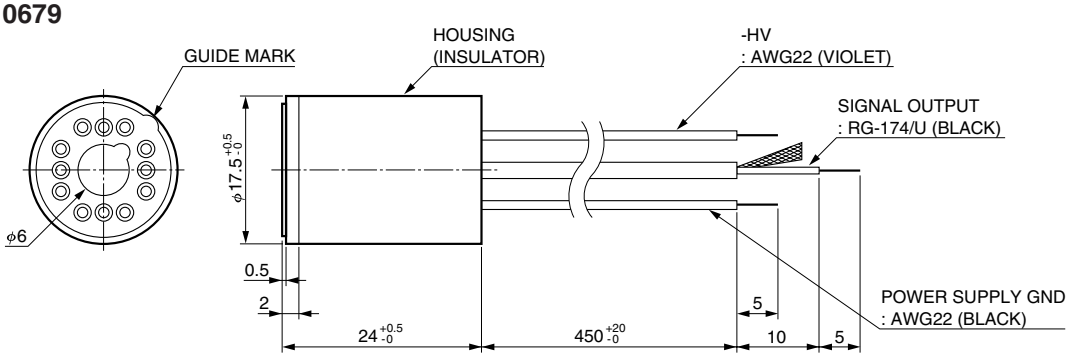

E10679-50

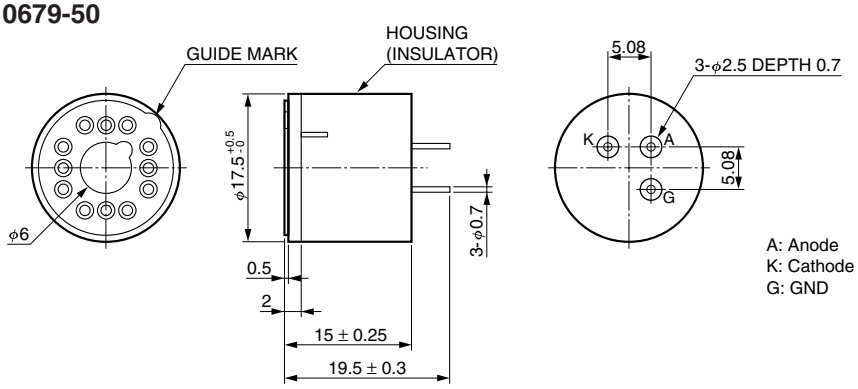

RELATED PRODUCTS

HIGH VOLTAGE POWER SUPPLIES

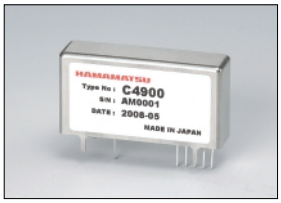

C4900, C4900-01



C10940-03

Parameter	C4900	C4900-01	C10940-03	Unit
Input Voltage	+15	+12	+5	V
Input Current with Full Load	90	95	230	mA
Output Voltage	0 to -1250		-10 to -1200	V
Max. Output Current	0.6	0.5	0.6	mA
Dimensions (W × H × D)	46 × 24 × 12		15 × 18 × 15	mm
Weight	31		8.5	g
Operating Ambient Temperature	0 to +50			°C
Operating Ambient Humidity	Below 80 (No condensation)			%

HAMAMATSU PHOTONICS K.K. www.hamamatsu.com

HAMAMATSU PHOTONICS K.K., Electron Tube Division
314-5, Shimokanzo, Iwata City, Shizuoka Pref., 438-0193, Japan, Telephone: (81)539/62-5248, Fax: (81)539/62-2205
U.S.A.: Hamamatsu Corporation: 360 Foothill Road, P. O. Box 6910, Bridgewater. N.J. 08807-0910, U.S.A., Telephone: (1)908-231-0960, Fax: (1)908-231-1218 E-mail: usa@hamamatsu.com
Germany: Hamamatsu Photonics Deutschland GmbH: Arzbergerstr. 10, D-82211 Herrsching am Ammersee, Germany, Telephone: (49)8152-375-0, Fax: (49)8152-2658 E-mail: info@hamamatsu.de
France: Hamamatsu Photonics France S.A.R.L.: 19, Rue du Saule Trapu, Parc du Moulin de Massy, 91882 Massy Cedex, France, Telephone: (33)1 69 53 71 00, Fax: (33)1 69 53 71 10 E-mail: infos@hamamatsu.fr
United Kingdom: Hamamatsu Photonics UK Limited: 2 Howard Court, 10 Tewin Road Welwyn Garden City Hertfordshire AL7 1BW, United Kingdom, Telephone: 44-(0)1707-294888, Fax: 44(0)1707-325777 E-mail: info@hamamatsu.co.uk
North Europe: Hamamatsu Photonics Norden AB: Smidesvägen 12, SE-171-41 SOLNA, Sweden, Telephone: (46)8-509-031-00, Fax: (46)8-509-031-01 E-mail: info@hamamatsu.se
Italy: Hamamatsu Photonics Italia: S.R.L.: Strada della Moia, 1/E, 20020 Arese, (Milano), Italy, Telephone: (39)02-935 81 733, Fax: (39)02-935 81 741 E-mail: info@hamamatsu.it
China: HAMAMATSU PHOTONICS (CHINA) Co., Ltd.: 1201 Tower B, Jiaming Center, No.27 Dongsanhuan Beilu, Chaoyang District, Beijing 100020, China, Telephone: (86)10-6586-6006, Fax: (86)10-6586-2866 E-mail: hpc@hamamatsu.com.cn

TACC1051E01
JAN. 2012 IP