E-327AD 2PST, 10 Amps, 115 VAC



Features:
- 2PST Main Contacts
- Monitor Voltage
- Monitor Frequency
- Monitor Phase Sequence
- 115 VAC
- 10 Amps
- High Reliability
- Meets many requirements of MIL-R-6106
- Light Weight Construction

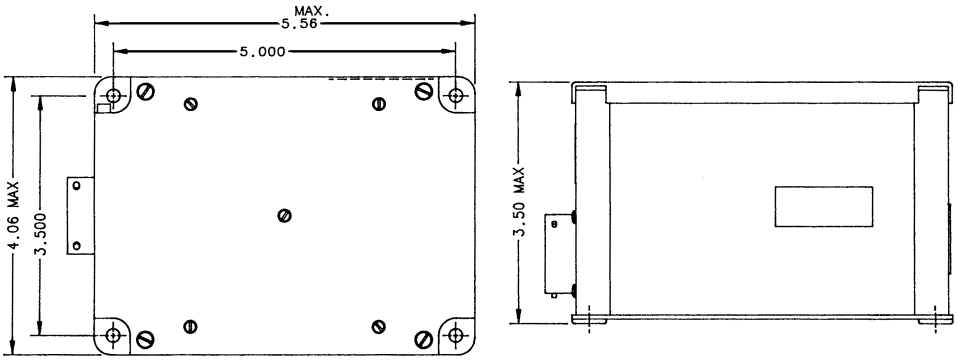

Dimensions for this product are expressed in inches.
Multiply values by 25.4 for millimeters.

CONTACTOR CONFIGURATION

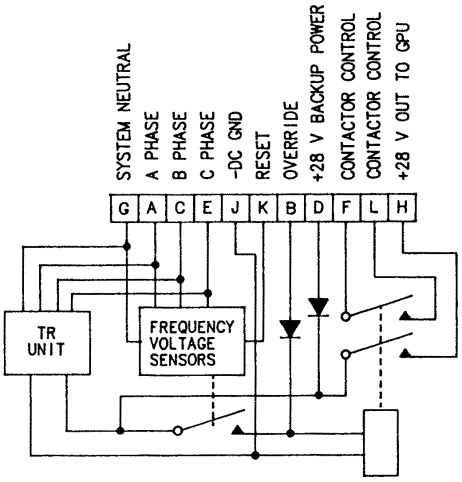

Notes:

PRODUCT SPECIFICATIONS		
Construction	Aluminum Case Gasket Sealed, Vented	
Input Voltage	115V, 400 Cycles, L-N Normal	
Temperature	-55°C to +71°C Operating	
Pick-Up (Contact Closes)	When voltage frequency and phase sequence are anywhere within the following limits and reset is grounded.	
Voltage	105 to 125V	
Frequency	375 to 425 Hz, Phase Sequence A-B-C	
Drop-Out (Contact Opens)	When system reaches the frequency or the effective value of the voltage over or under the limits tabulated.	
Over Voltage	Volts / Freq.	Time Delay Sec.
	132 V	6 Sec ±10%
	150V	.95 Sec ±10%
	180V	100 MS Maximum
Under Voltage	98V (Min.)	3.5 Sec ±.5 Sec
Over Frequency	430 Hz	6 Sec ±1 Sec
	480 Hz	100 MS Maximum
Under Frequency	370 Hz	6 Sec ±1 Sec
	320 Hz	100 MS Maximum
Weight Maximum (Estimated)	3 Lbs	
Output Rating (15 Amp 100 MS Voltage 20 V Min.)	26 ±4 VDC 3 Amp Continuous	
Output Contact Rating	10 Amps Res at 28V (50,000 Operations)	
	4 Amps Inductive at 28V	
Altitude	0-35,000 Feet	
Vibration	MIL-E-5272 Procedure XII	

For factory-direct application assistance, contact the HARTMAN product team at (419) 521-9500, Fax (419) 526-2749.

© 2004 by Tyco Electronics Corporation. All Rights Reserved.
HARTMAN and TYCO are trademarks.

Catalog (web doc only)
Revised 5-04

www.tycoelectronics.com

Dimensions are in inches and millimeters unless otherwise specified. Values in brackets are metric equivalents.

Dimensions are shown for reference purposes only. Specifications subject to change.

USA: 1-800-522-6752
Canada: 1-905-470-4425
Mexico: 01-800-733-8926
C. America: 52-55-5-729-0425

South America: 55-11-3611-1514
Hong Kong: 852-2735-1628
Japan: 81-44-844-8013
UK: 44-141-810-8967