This document was generated on 05/27/2010

PLEASE CHECK WWW.MOLEX.COM FOR LATEST PART INFORMATION

Part Number: 0010011094
Status: Active
Overview: kk
Description: 5.08mm (.200") Pitch KK® Crimp Terminal Housing, 9 Circuits

Documents:
3D Model
Drawing (PDF)
Product Specification PS-99020-0087 (PDF)
RoHS Certificate of Compliance (PDF)

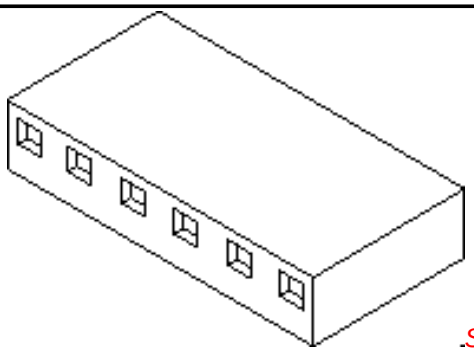

Series image - Reference only

Agency Certification

CSA	LR19980
UL	E29179

General

Product Family	Crimp Housings
Series	3001
Overview	kk
Product Name	KK®

Physical

Circuits (maximum)	9
Color - Resin	Natural
Flammability	94V-2
Gender	Female
Glow-Wire Compliant	No
Material - Resin	Nylon
Number of Rows	1
Packaging Type	Bag
Panel Mount	No
Pitch - Mating Interface (in)	0.200 In
Pitch - Mating Interface (mm)	5.08 mm
Temperature Range - Operating	-40°C to +105°C

Solder Process Data

Lead-free Process Capability	Wave Capable (TH only)

Material Info

Old Part Number	3001-09

Reference - Drawing Numbers

Product Specification	PS-99020-0087
Sales Drawing	SDE-3001-N-*

EU RoHS
ELV and RoHS Compliant
REACH SVHC
Not Reviewed
Halogen-Free Status
Halogen-Free

China RoHS

Need more information on product environmental compliance?

Email productcompliance@molex.com
For a multiple part number RoHS Certificate of Compliance, click here

Please visit the Contact Us section for any non-product compliance questions.

Search Parts in this Series
3001Series

Mates With
3061 , 3003 , 3008

Use With
2478 Crimp Terminals for 18-24 AWG, 2578 Crimp Terminals for 22-26 AWG, 2878

This document was generated on 05/27/2010

PLEASE CHECK WWW.MOLEX.COM FOR LATEST PART INFORMATION

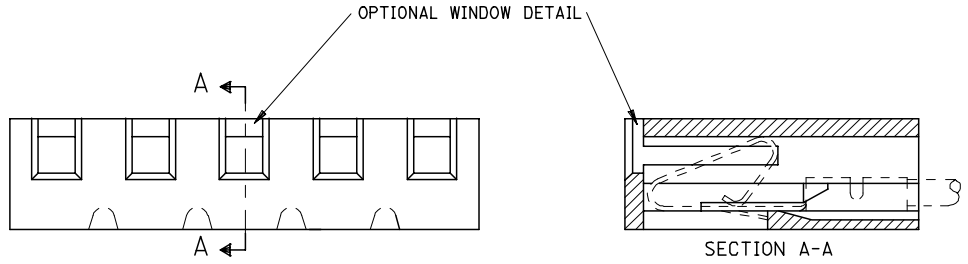

NOTE :
1. DIMENSIONS SHOWN MILLIMETERS / INCHES
2. FOR OTHER PRODUCT SPEC'S. SEE PSX 10-39.
3. THIS HOUSING USES KK TERM. No's. 2478, 2578 & 28

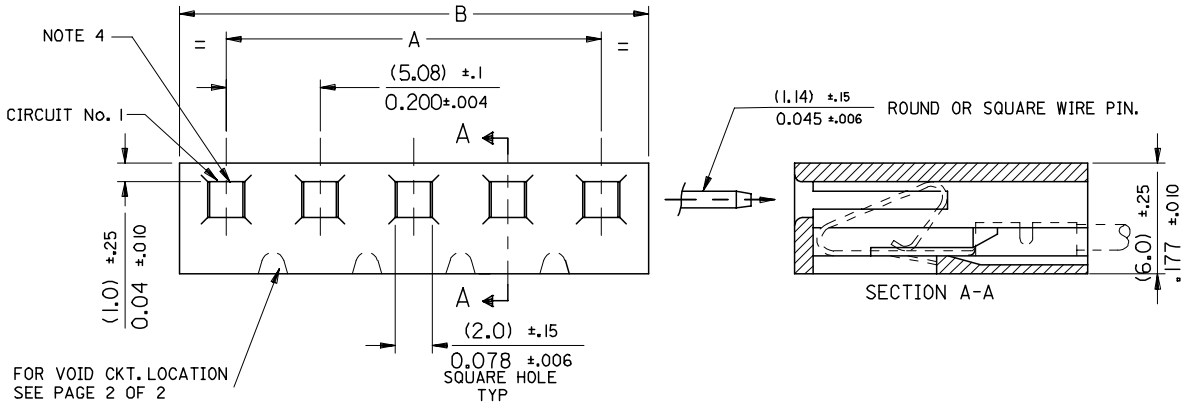

CENTER RIB ONLY

10-01-1204	E-3001-20	3.800 ±.012	4.000 +0 −.016	96.52 ±0.3	101.60 +0 −.40
-1194	-19	3.600 ±.012	3.800 +0 −.016	91.44 ±0.3	96.52 +0 −.40
-1184	-18	3.400 ±.012	3.600 +0 −.016	86.36 ±0.3	91.44 +0 −.40
-1174	-17	3.200 ±.012	3.400 +0 −.016	81.28 ±0.3	86.36 +0 −.40
-1164	-16	3.000 ±.010	3.200 +0 −.016	76.20 ±0.25	81.28 +0 −.40
-1154	-15	2.800 ±.010	3.000 +0 −.012	71.12 ±0.25	76.20 +0 −.30
-1144	-14	2.600 ±.010	2.800 +0 −.012	66.04 ±0.25	71.12 +0 −.30
-1134	-13	2.400 ±.010	2.600 +0 −.012	60.96 ±0.25	66.04 +0 −.30
-1124	-12	2.200 ±.010	2.400 +0 −.012	55.88 ±0.25	60.96 +0 −.30
-1114	-11	2.000 ±.008	2.200 +0 −.012	50.80 ±0.20	55.88 +0 −.30
-1104	-10	1.800 ±.008	2.000 +0 −.008	45.72 ±0.20	50.80 +0 −.20
-1094	-9	1.600 ±.008	1.800 +0 −.008	40.64 ±0.20	45.72 +0 −.20
-1084	-8	1.400 ±.008	1.600 +0 −.008	35.56 ±0.20	40.64 +0 −.20
-1074	-7	1.200 ±.008	1.400 +0 −.008	30.48 ±0.20	35.56 +0 −.20
-1064	-6	1.000 ±.004	1.200 +0 −.008	25.40 ±0.10	30.48 +0 −.20
-1054	-5	.800 ±.004	1.000 +0 −.006	20.32 ±0.10	25.40 +0 −.15
-1044	-4	.600 ±.004	.800 +0 −.006	15.24 ±0.10	20.32 +0 −.15
-1034	-3	.400 ±.004	.600 +0 −.006	10.16 ±0.10	15.24 +0 −.15
-1024	-2	.200 ±.004	.400 +0 −.006	5.08 ±0.10	10.16 +0 −.15
10-01-1014	E-3001-1	———	.200 +0 −.006	———	5.08 +0 −.15
PART No.	ENG. No.	A	B	A	B
		ENGLISH		METRIC	

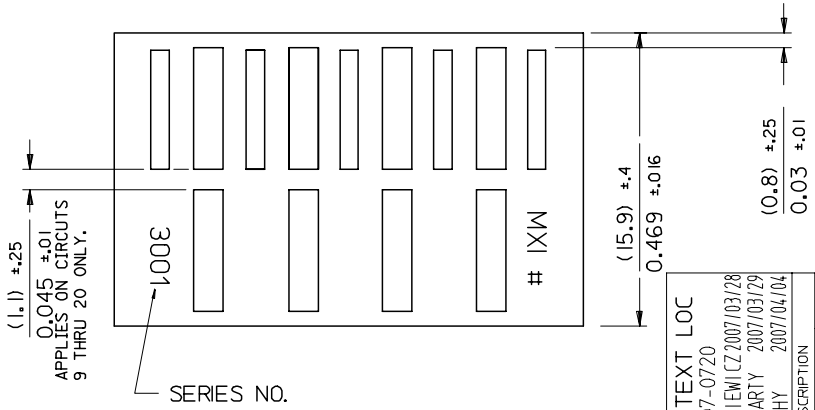

MAT'L: NYLON

CORRECT TEXT LOC
EC NO: E2007-0720
DRWN: DWASZKIEWICZ 2007/03/28
CHK'D: D. MORIARTY 2007/03/29
APPR: JDENNEHY 2007/04/04
DESCRIPTION
REV

QUALITY SYMBOLS
▼=0
▽=0

GENERAL TOLERANCES (UNLESS SPECIFIED)

	mm	INCH
4 PLACES	± ---	± ---
3 PLACES	± ---	± .010
2 PLACES	± 0.25	± .014
1 PLACE	± 0.35	± ---
ANGULAR ±1/2°		

DRAFT WHERE APPLICABLE MUST REMAIN WITHIN DIMENSIONS

DIMENSION STYLE: MM/IN
SCALE: 7:1
DESIGN UNITS: METRIC
THIRD ANGLE PROJECTION

DRAWN BY: P.MOORE DATE: 1998/09/15
CHECKED BY: MGOONEY DATE: 1999/03/12
APPROVED BY: MWILHITE DATE: 1999/03/12
MATERIAL NO.: SEE CHART

TITLE: 5.08MM KK CRP TERM HSG

MOLEX INCORPORATED

DOCUMENT NO.: SDE-3001-N-*
SHEET NO.: 1 OF 1
SIZE: A3

THIS DRAWING CONTAINS INFORMATION THAT IS PROPRIETARY TO MOLEX INCORPORATED AND SHOULD NOT BE USED WITHOUT WRITTEN PERMISSION

PART NO. SEE CHART
DWG. NO. SDE-3001-N-*

11	97-00-0919	E-3001-12-11	12
2	NOT TOOLED	E-3001-7-2	7
3	I 10-01-1080	-8-3	8
5	I -3085	-8-5	8
4	I -3044	-4-4	4
3	I -1030	-3-3	3
2	-1049	-4-2	4
2	-1109	-10-2	10
2	-1099	-9-2	9
5	10-01-1069	E-3001-6-5	6
VOID CKT. LOCATION	PART No.	ENG. No.	NO OF CKTS.

FOR MANUFACTURE IN SINGAPORE ONLY

FOR DIMENSIONS SEE SHEET No.1

REDRAWN ON CAD
EC NO. E90109
DRWN: P.MOORE 98/09/19
CH'K:
APPR:
DESCRIPTION
REV
K

QUALITY SYMBOLS
MAJOR ▼ =
CRITICAL ▽ C =

GENERAL TOLERANCES: (UNLESS SPECIFIED)

	mm	INCH
4 PLACES	±0.	±.
3 PLACES	±0.	±.
2 PLACES	±0.	±.
1 PLACE	±0.	±.
ANGULAR: ± 1/2 °		

DRAFT WHERE APPLICABLE MUST REMAIN WITHIN DIMENSIONS

SCALE :
DESIGN UNITS ☐mm ☐INCH
THIRD ANGLE PROJECTION
DIMENSIONS: ☒ mm INCH ☐ INCH mm ☐ mm ONLY
SHT REV
REVISE ON CAD ONLY

DRAWN BY & DATE P.MOORE 98/09/19
CHECKED BY & DATE MGOONEY 12/03/99
APPROVED BY & DATE MWILHITE 12/03/99
CAD FILENAME PM19.DGN

TITLE:
HOUSING, CONNECTOR, KK (5.08)/.200 CRIMP STYLE TERM.

molex MOLEX INCORPORATED

MATERIAL NO. SEE CHART
DRAWING NO. SDE-3001-N-*
SHEET NO. 2 OF
SIZE B

THIS DRAWING CONTAINS INFORMATION THAT IS PROPRIETARY TO MOLEX INCORPORATED AND SHOULD NOT BE USED WITHOUT WRITTEN PERMISSION.