SAME54 Curiosity Ultra Users Guide DM320210

Introduction

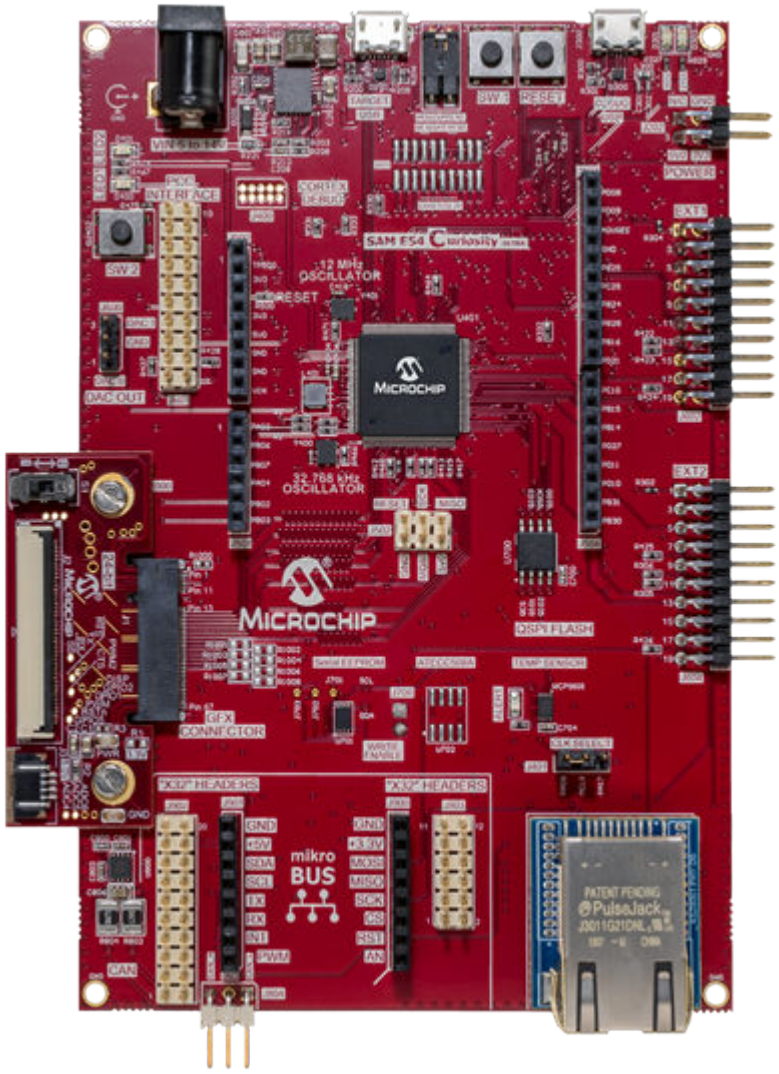

The SAM E54 Curiosity Ultra Development Board (DM320210) includes an integrated programmer and debugger, hence additional hardware is not required to get started. Users can add functionality through MikroElectronika mikroBUS™ Click™ adapter boards, add Ethernet connectivity with the Microchip PHY Daughter Board, add Wi-Fi™ connectivity capability using the Microchip expansions boards, and add audio input and output capability with Microchip audio daughter boards.

With or without expansion boards, the SAM E54 Curiosity Ultra Development Board provides the freedom to develop for a variety of applications, including Bluetooth® Audio, CAN, Graphics User Interface (GUI), Internet of Things (IoT), robotics development, and proof-of-concept (PoC) designs.

© 2019 Microchip Technology Inc.

Features

The following are features of the SAM E54 Curiosity Ultra development board

- ATSAME54P20A, 120 MHz, 1MB Flash, 256 KB RAM
- On-Board Debugger (EDBG)
  - Real time Programming and Debugging
  - Virtual COM port (VCOM)
  - Data Gateway Interface (DGI)
- One mikroBUS interfaces
- One X32 audio interfaces supporting Bluetooth and audio
- Ethernet interface
- Graphics interface
- Xplained Pro extension compatible interface
- CAN interface
- User buttons
- User LEDs
- 8-MB QSPI memory
- Arduino Uno R3 compatible interface

Kit Contents

The development board kit contains one SAM E54 Curiosity Ultra development board (DM320210).

Note: If you are missing any part of the kit, contact a Microchip sales office for assistance. A list of Microchip offices for sales and service is provided on the last page of this document.

© 2019 Microchip Technology Inc.

Table of Contents

Introduction....1

1. SAM E54 Curiosity Ultra Development Board Functionality and Features....4

2. Hardware....19

The Microchip Website....32

Product Change Notification Service....32

Customer Support....32

Product Identification System....33

Microchip Devices Code Protection Feature....33

Legal Notice....33

Trademarks....34

Quality Management System....34

Worldwide Sales and Service....35

© 2019 Microchip Technology Inc.

1. SAM E54 Curiosity Ultra Development Board Functionality and Features

The SAM E54 Curiosity Ultra development board features and functionalists are given in the following sections.

1.1 SAM E54 Curiosity Ultra Development Board Features

Figure 1-1. SAM E54 Curiosity Ultra Development Board Layout (Top View)

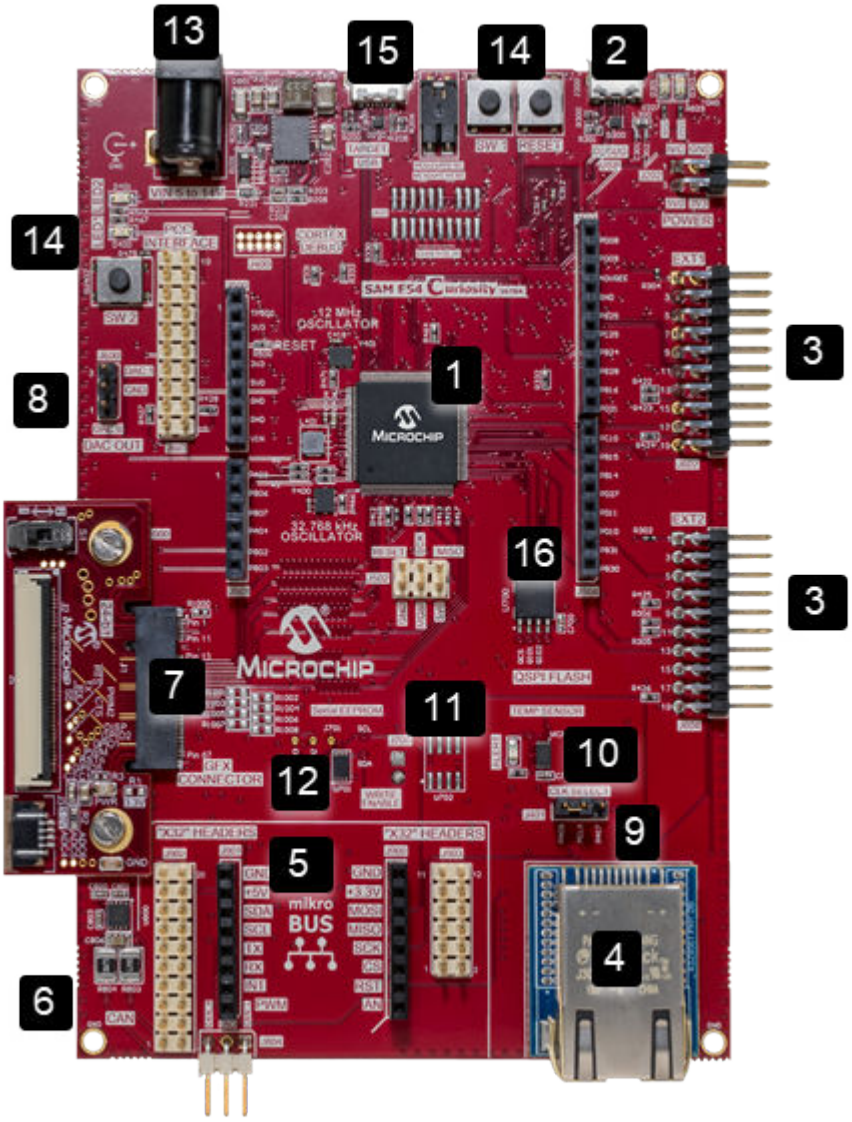

Table 1-1. SAM E54 Curiosity Ultra Development Board Feature Descriptions

Number	Description of item
1	ATSAME54P20A
2	USB debugger interface
3	Xplained Pro expansion compatible interface

.....continued

Number	Description of item
4	Ethernet interface (RMII, SPI, GPIO).
5	X32 audio interface. 2 per board. Bluetooth & audio codecs sold separately
6	CAN interface
7	Graphics interface
8	DAC output
9	Audio reference clock select
10	I^2C temp sensor (MCP9808)
11	ATECC508 (Not populated)
12	I^2C Serial EEPROM with MAC address
13	2.1 mm barrel jack power input
14	Programmable user buttons and LEDs
15	USB to ATSAME54P20A
16	Quad SPI memory 256 Mb (8 MB)

© 2019 Microchip Technology Inc.

1.2 System Block Diagram

The following figure illustrates the system block diagram, which indicates the data bus routing.

Figure 1-2. System Block Diagram

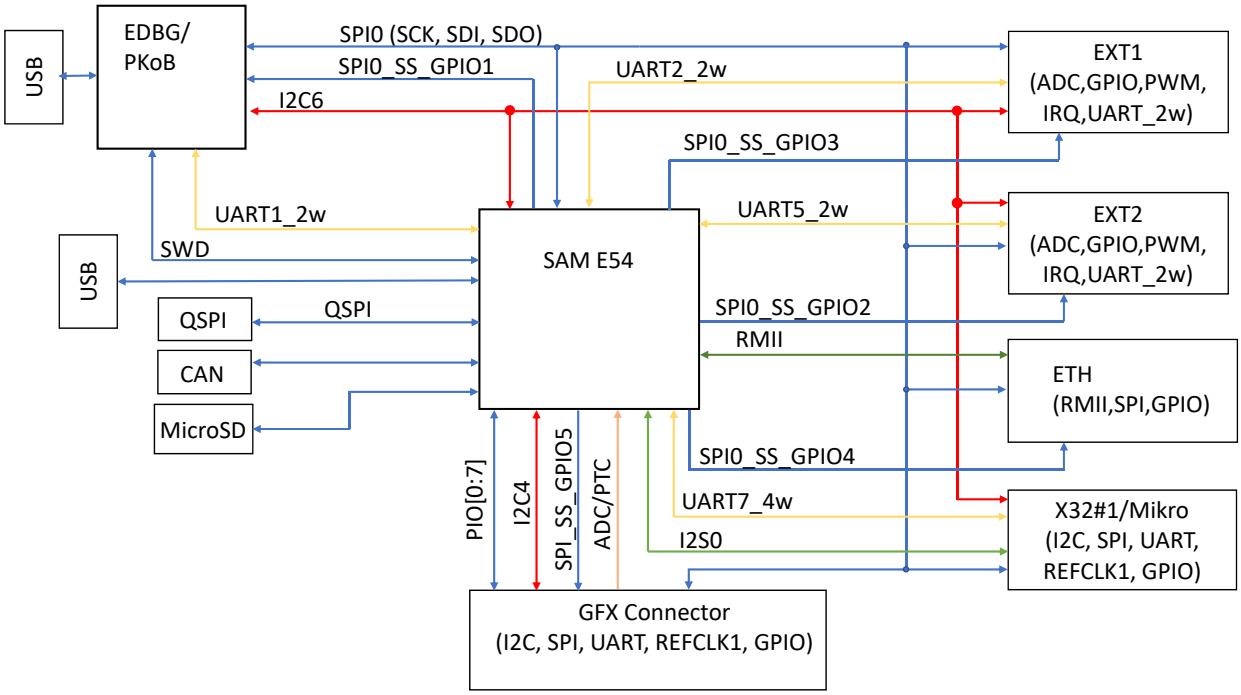

1.3 Power Block Diagram

The following diagram shows the power system on the SAM E54 Curiosity Ultra development board. The development board has many power sub systems that allow it to accept up to 16V. The barrel jack is a 2.1 mm center positive connector. The power in can also be connected through the Arduino header (Vin), and it supplies power before the reverse voltage protection.

Figure 1-3. Power Block Diagram

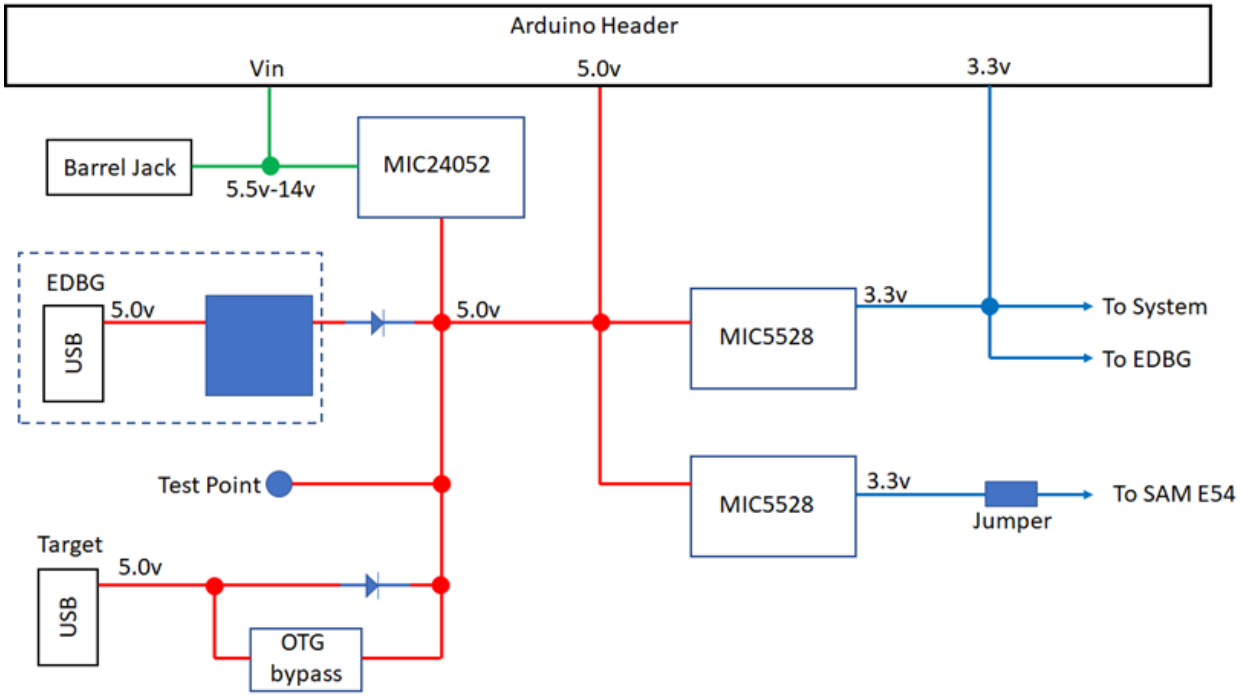

1.4 EDBG

The SAM E54 Curiosity Ultra development board implements several Curiosity Pro standards, such as extension headers and connectors. Curiosity Pro is an evaluation platform that provides a full Microchip microcontroller experience. The platform consists of a series of Microcontroller (MCU) boards and extension boards that are integrated with the Microchip MPLAB® X IDE that supports data streaming. The Curiosity Pro MCU boards support a wide range of Curiosity Pro extension boards, such as audio DACs and codecs, Ethernet PHYs, graphics cards, and mikroBUS that are connected through a set of standardized headers and connectors. Each extension board has an identification (ID) chip to uniquely identify which boards are connected to a Xplained Pro MCU board. This information is given in the relevant user guides, application notes, data sheets, and the example code examples through the MPLAB X IDE.

The development board contains a Microchip Embedded Debugger (EDBG) for on-board debugging. The EDBG is a complex USB device, which is based on the following interfaces:

- Debugger
- Virtual COM Port
- Data Gateway Interface (DGI)

Together with the Microchip MPLAB X IDE, the EDBG debugger interface can program and debug the ATSAME54P20A. On the development board, the SWD interface is connected between the EDBG and the ATSAME54P20A.

The Virtual COM Port is connected to a UART on the ATSAME54P20A and provides an easy way to communicate with the target application through the terminal software. It offers variable baud rate, parity, and Stop bit settings. The settings on the ATSAME54P20A must match with the settings given in the terminal software.

Note: If not set automatically, Data Terminal Ready (DTR) must be set in the terminal software.

The DGI consists of several physical interfaces for communication with the host computer. Communication over the interfaces is bidirectional. It can be used to send events and values from the ATSAME54P20A, or as a generic printf-style data channel. Traffic over the interfaces can be timestamped on the EDBG for accurate tracing of events. Note that timestamping imposes an overhead that reduces maximal throughput. The Data Visualizer is used to send and receive data through DGI.

The EDBG controls two LEDs on the development board: a power LED and a status LED. The table below provides how the LEDs are controlled in different operation modes.

Table 1-2. EDBG LED Control

Operation Mode	Power LED	Status LED
Normal operation	The power LED is lit when power is applied to the board.	Activity indicator, LED flashes when any communication happens to the EDBG.
Bootloader mode (Idle mode)	The power LED and the status LED blinks simultaneously.	The power LED and the status LED blinks simultaneously.
Bootloader mode (firmware upgrade)	The power LED and the status LED blinks in an alternating pattern.	The power LED and the status LED blinks in an alternating pattern.

For additional information on EDBG, refer to the EDBG User Guide.

Hardware Identification System

All Curiosity Pro-compatible extension boards have an Microchip ATSHA204 CryptoAuthentication™ chip mounted. This chip contains information that identifies the extension with its name and data. When an Xplained Pro extension is connected to a Curiosity Pro MCU board, the information is read and sent to the MPLAB X IDE. The Microchip kits extension, installed with MPLAB X IDE, provides relevant information, such as code examples, and links to relevant documents. The following table provides the data fields stored in the ID chip with content examples.

© 2019 Microchip Technology Inc.

Table 1-3. Xplained Pro ID Chip Content Example

Data Field	Data Type	Example
Manufacture	ASCII string	Microchip'\0'
Product Name	ASCII string	-
Product Revision	ASCII string	04'\0'
Product Serial number	ASCII string	1774020200000010'\0'
Minimum Voltage (mV)	uint16_t	3000
Maximum Voltage (mV)	uint16_t	3600
Maximum Current (mA)	uint16_t	30

© 2019 Microchip Technology Inc.

1.5 Audio Clock Selection

The SAM E54 has two ways of supporting I²S audio applications: Host mode and Slave mode. This refers to which mode generates the I²S Master clock, and it also known as a reference clock. The following figure shows the relationship between the devices. On this board there is a jumper to select between the two modes, Master mode and Slave mode. The usable modes also depend on which codec it supports, as not all codecs can support both the modes.

Figure 1-4. Audio Clock Selection

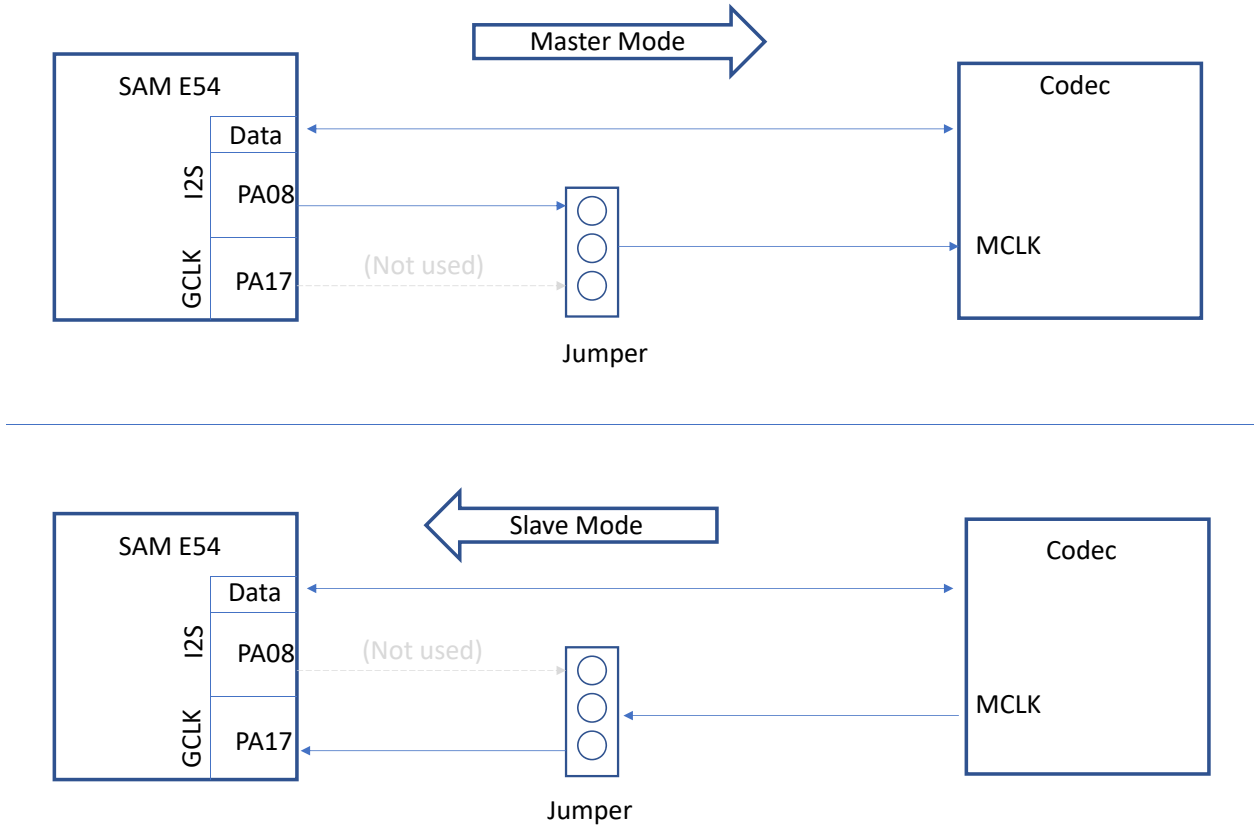

1.5.1 Pinout

The following table describes the pinout for the X32 Audio Interface. See the 2.1 Schematics for more information.

Table 1-4. Pinout

Pin Number	Name	Description	Interface
1	GND	Ground	Power
2	GND	Ground	Power
3	UART RX	UART RX, receive to MCU from DB	UART
4	UART CTS	UART Clear to send	UART
5	UART TX	UART TX, transmit from MCU to DB	UART
6	UART RTS	UART Ready to send	UART
7	I²C SCL	Clock line for I²C interface.	I²C
8	STBY/RST	Standby/Reset control	GPIO

.....continued

Pin Number	Name	Description	Interface
9	I2C SDA	Data line for I2C interface.	I2C
10	Audio WS/LRCLK	Audio Word Select/Left Right Clock	I2S
11	Audio In	Audio into MCU, out from codac	I2S
12	Audio CLK	Audio clock	I2S
13	Audio out	Audio out of MCU, into codac/DAC	I2S
14	REFCLK/MCK	Reference clock #1	REFCLK
15	GND	Ground	Power
16	GND	Ground	Power
17	NC	Legacy hold over	-
18	+3.3v	VDD	Power
19	NC	Legacy hold over	-
20	+5.0v	VDD	Power
21 (1)	NC	NC	
22 (2)	ADC/Card ID pin	Analog-to-Digital Converter to read voltage on the daughter card	1-wire
23 (3)	NC	NC	
24 (4)	NC	NC	
25 (5)	NC	NC	
26 (6)	NC	NC	
27 (7)	NC	NC	
28 (8)	NC	NC	
29 (9)	NC	NC	
30 (10)	NC	NC	
31 (11)	GND	Ground	Power
32 (12)	GND	Ground	Power

1.5.2 X32 Port Connections

The following table provides the port and connection details of the X32 audio interface. The I2S signals listed are the Main signals, and both the signals are available at each interface.

Table 1-5. X32 Port Connections

Interface	X32
UART RX	PC13
UART TX	PC12
UART RTS	PC14
UART CTS	PC15
I2C SDA	PD09
I2C SCL	PD08

© 2019 Microchip Technology Inc.

.....continued

Interface	X32
Reset	PC18
REFCLK	PA08/PA17 (refer to Figure 1-4 Audio Clock Selection)
I^2S Clock	PA10
I^2S Audio Out (MOSI)	PA11
I^2S Audio In (MISO)	PB10
I^2S LRCLK	PA09

1.6 mikroBUS

The mikroBUS interface enables using additional click boards. For more information, and to see the boards that can be used with this development board follow the link: https://www.mikroe.com/.

Note: Some of these pins are shared with the X32 audio interface. Due to location, an X32 audio card cannot be used simultaneously as the click interface due to mechanical interference.

© 2019 Microchip Technology Inc.

1.7 Xplained Pro Standard Extension Header

All Xplained Ultra and Curiosity Ultra Kits have many dual-row, 20-pin, and 100 mil extension headers. Xplained Ultra and Curiosity Ultra MCU boards have male headers, while Xplained Ultra extensions have their female counterparts as shown in the following figure.

Note: All pins are not always connected.

The extension headers can be used to connect a variety of Xplained Pro extensions to Xplained Ultra and Curiosity Ultra MCU boards, or to access the pins of the target MCU on Xplained Ultra MCU or Curiosity Ultra boards directly.

Figure 1-5. Extension Headers

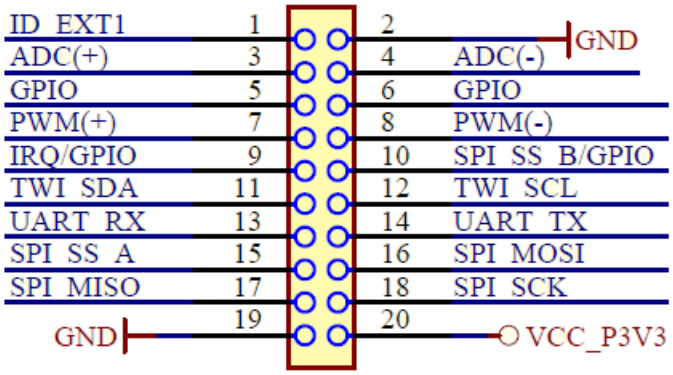

All connected pins follow the defined pinout description as shown in the following table.

Table 1-6. Xplained Pro Standard Extension Header

Pin number	Name	Description
1	ID	Communication line to the ID chip on an extension board
2	GND	Ground
3	ADC(+)	Analog-to-Digital Converter (ADC), alternatively positive part of differential ADC
4	ADC(-)	Analog-to-Digital Converter (ADC), alternatively negative part of differential ADC
5	GPIO1	General purpose I/O
6	GPIO2	General purpose I/O
7	PWM(+)	Pulse-Width Modulation (PWM), alternatively positive part of differential PWM
8	PWM(-)	Pulse-Width Modulation (PWM), alternatively negative part of differential PWM
9	IRQ/INT/GPIO	Interrupt request line and general purpose I/O
10	SPI SS B/GPIO	SPI Slave Select or general purpose I/O
11	I^2C SDA	Data line for I^2C interface. Always implemented, bus type
12	I^2C SCL	Clock line for I^2C interface. Always implemented, bus type
13	UART RX	Receiver line of target device UART
14	UART TX	Transmitter line of target device UART
15	SPI SS A/GPIO	SPI Slave Select or general purpose I/O
16	SPI MOSI	**M**aster **O**ut **S**lave **I**n line of serial peripheral interface. Always implemented, bus type.
17	SPI MISO	**M**aster **I**n **S**lave **O**ut line of serial peripheral interface. Always implemented, bus type.

© 2019 Microchip Technology Inc.

.....continued		
Pin number	**Name**	**Description**
18	SPI SCK	Clock for serial peripheral interface. Always implemented, bus type.
19	GND	Ground
20	V_{CC}	Power for extension boards (3.3V)

1.8 Graphics Connectors or GFX Card Interface

The SAM E54 Curiosity Ultra development kit is designed to have a modular graphics interface. This interface enables the use of several different graphics cards, which allows for expandability and different use cases. A 24-bit pass though card is included with the kit, this board passes parallel data through, and can be configured to an 8-bit 8080 MCU mode. This card also provides access to the ADC for resistive touch screen or self-drive PTC touch screens. Refer to the following table for the pin description.

Table 1-7. Graphics Interface Pinout

Pin Number	Name	Description
1	GND	Ground
2	GND	Ground
3	$\overline{MCLR}$	Master Clear Reset controlled by the debuggers. Allows for a complete system reboot.
4	IRQ1 (LCD Touch)	Interrupt request line for cap touch device
5	5.0V V_{CC}	5.0V
6	IRQ2 (Q Touch)	Interrupt request line for Q touch devices
7	LCDEN	LCD Data Enable
8	IRQ3 (Display Controllers)	Interrupt request line for external display controllers
9	LCDHSYNC/NCS3	LCD Horizontal Sync or GPIO
10	IRQ4 (Resistive touch)	Interrupt request line for resistive touch controllers
11	LCDVSYNC/nWE	LCD Vertical Sync, CS, or GPIO
12	5.0v V_{CC}	+5.0v
13	LCDPCK/nRD	LCD pixel clock, Write Enable or GPIO
14	I^2C SDA	Data line for I^2C interface. Always implemented, bus type.
15	LCD D0	LCD Data bit 0
16	I^2C SCL	Clock line for I^2C interface. Always implemented, bus type.
17	LCD D1	LCD Data bit 1
18	SPI SCK	Clock for serial peripheral interface. Always implemented, bus type.
19	LCD D2	LCD Data bit 2
20	SPI MOSI	**M**aster **O**ut **S**lave **I**n line of serial peripheral interface.
21	LCD D3	LCD Data bit 3
22	SPI MISO	**M**aster **I**n **S**lave **O**ut line of serial peripheral interface.
23	LCD D4	LCD Data bit 4

© 2019 Microchip Technology Inc.

.....continued

Pin Number	Name	Description
24	SPI SS	SPI Slave Select
25	LCD D5	LCD Data bit 5
26	UART RX	Receiver line of target device UART
27	LCD D6	LCD Data bit 6
28	UART TX	Transmitter line of target device UART. (from MCU to GFX card)
29	LCD D7	LCD Data bit 7
30	UART RTS	UART Ready-To-Send (from MCU to GFX card)
31	LCD D8	No Connect
32	UART CTS	UART Clear-To-Send (from MCU to GFX card)
33	LCD D9	No Connect
34	LCD PWM	LCD PWM back light control
35	LCD D10	No Connect
36	PWM2	Pulse-Width Modulation (PWM)
37	LCD D11	No Connect
38	GPIO1	General purpose I/O
39	LCD D12	No Connect
40	GPIO2	General purpose I/O
41	LCD D13	No Connect
42	GPIO3	General purpose I/O
43	LCD D14	No Connect
44	STBY/RST/GPIO4	Standby/Reset or general purpose I/O. For resetting devices attached to the GFX connector.
45	LCD D15	No Connect
46	STBY/RST/GPIO5	Standby2/Reset2 or general purpose I/O
47	LCD D16	No Connect
48	ID pin	Communication line to the ID chip on an extension board
49	LCD D17	No Connect
50	ADC 0	Analog-to-Digital Converter to MCU
51	LCD D18	No Connect
52	ADC1	Analog-to-Digital Converter to MCU
53	LCD D19	No Connect
54	ADC2	Analog-to-Digital Converter to MCU
55	LCD D20	No Connect
56	ADC3	Analog-to-Digital Converter to MCU
57	LCD D21	No Connect

© 2019 Microchip Technology Inc.

.....continued

Pin Number	Name	Description
58	ADC4	Analog-to-Digital Converter to MCU
59	LCD D22	No Connect
60	ADC5	Analog-to-Digital Converter to MCU
61	LCD D23	No Connect
62	ADC6	Analog-to-Digital Converter to MCU
63	3.3V V_{CC}	+3.3V V_{CC}
64	ADC7	Analog-to-Digital Converter to MCU
65	GND	Ground
66	3.3V V_{CC}	+3.3V V_{CC}
67	GND	Ground
68	GND TAB	Mounting Tab
69	GND TAB	Mounting Tab

1.9 Ethernet

The SAM E54 Curiosity Ultra development kit has a modular Ethernet PHY system that enables different PHYs to be plugged into the board. This interface is setup to use a Reduced Media-Independent Interface (RMII) and a SPI bus interface with GPIO. The following figure illustrates the Ethernet PHY header configuration.

© 2019 Microchip Technology Inc.

Figure 1-6. Ethernet PHY Header Configuration

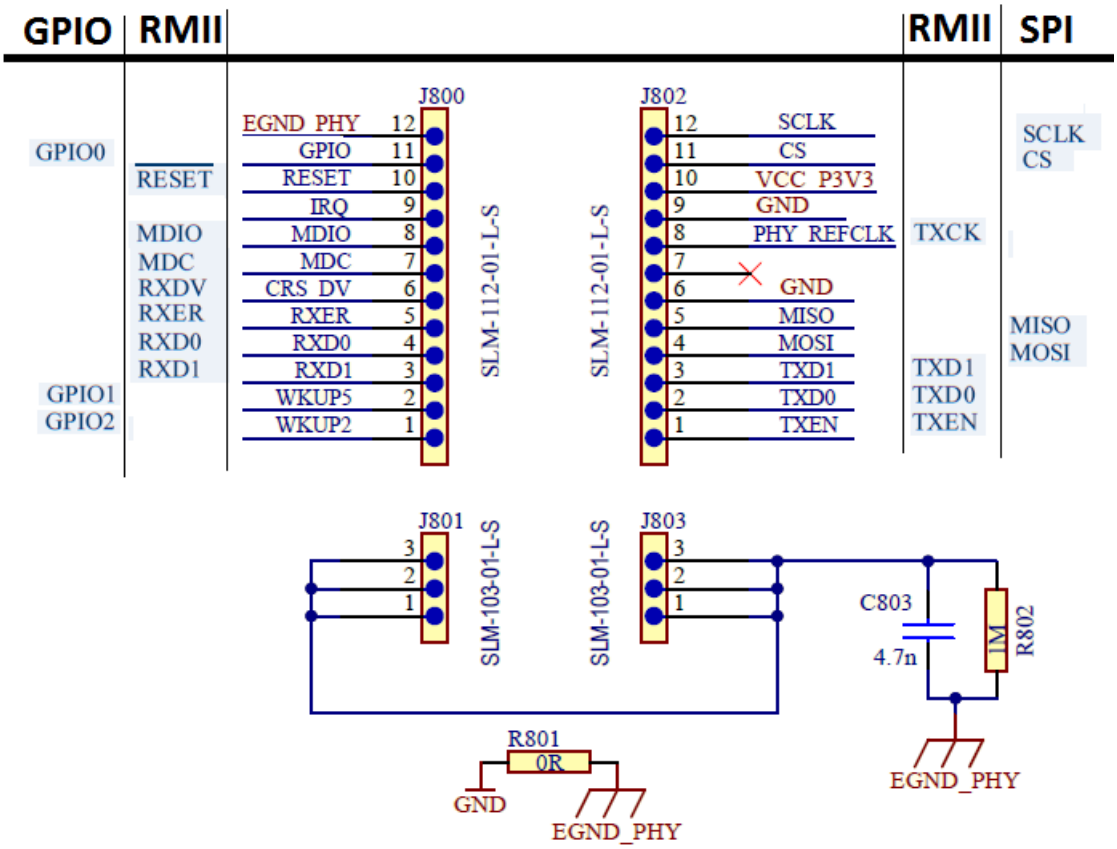

The following table provides the Ethernet PHY interface pinout descriptions.

Table 1-8. Ethernet Interface Pinout Description

Pin Number	Name	Description
1	GPIO	General purpose I/O
2	GPIO	General purpose I/O
3	RXD1	Receive Data 1
4	RXD0	Receive Data 0
5	RXER	Receive Error
6	RXDV	Receive Data Valid
7	MDC	-
8	MDIO	-
9	IRQ	Interrupt request line
10	RESET	Reset control to the Ethernet PHY
11	GPIO	General purpose I/O
12	EGND	Shield Ground
13 (1)	TXEN	Transmit Enable
14 (2)	TXD0	Transmit Data

© 2019 Microchip Technology Inc.

.....continued

Pin Number	Name	Description
15 (3)	TDX1	Transmit Data
16 (4)	MOSI	Master Out Slave In line of serial peripheral interface
17 (5)	MISO	Master In Slave Out line of serial peripheral interface
18 (6)	GND	Ground
19 (7)	NC	No Connect
20 (8)	REFCLK (in)	Reference Clock input (50 MHz)
21 (9)	GND	GND
22 (10)	+3.3v V_{DD}	+3.3V V_{DD}
23 (11)	CS	Chip Select for serial peripheral interface
24 (12)	SCK	Clock for serial peripheral interface
25 -30	EGND	Shield Ground

1.10 AT24MAC402 Serial EEPROM

The development board has an on-board 2-Kbit I^2C serial EEPROM which is available for user applications. This serial EEPROM has a unique EUI-48, and 128-bit serial number. The unique number can be seen in the Microchip MPLAB Kit window or Atmel Studio Xplained window after the kit has been plugged into the PC.

Users can change the device address using the solder pads on the board, but all address bits have been defaulted to one. Refer to schematics for additional information. For additional usage information of on this part, refer to the "AT24MAC402 and AT24MAC602 Data Sheet", which is available for download from the Hardware Features, or from the following location: http://ww1.microchip.com/downloads/en/DeviceDoc/Atmel-8807-SEEPROM-AT24MAC402-602-Datasheet.pdf.

The following are default address for the device:

AT24MAC_I2C_EEPROM_ADDR 0b1010110 //0x56 (7 bit)

AT24MAC_I2C_EXTENDED_ADDR 0b1011110 //0x5E (7 bit)

1.11 On-Board External Temperature Sensor

This development kit has an on-board external I^2C-based temperature sensor for application use. The external sensor is a MCP8908. The temperature sensor has a user programmable temperature alert output and a user programmable temperature limits with a typical accuracy of +/-0.25°C.

This part has an I^2C address of 0x18h. For additional information, refer to the "±0.5°C Maximum Accuracy Digital Temperature Sensor" document,which is available for download from the following location: http://ww1.microchip.com/downloads/en/DeviceDoc/25095A.pdf.

1.12 Hardware Features

The starter kit provides the following two push button switches: User switch and Reset switch. The push button switches do not have any debounce circuitry and require the use of internal pull-up resistors. This enables the user to investigate the software debounce techniques. When Idle, the switches are pulled high (+3.3V,) and when pressed, they are grounded.

© 2019 Microchip Technology Inc.

2. Hardware

2.1 Schematics

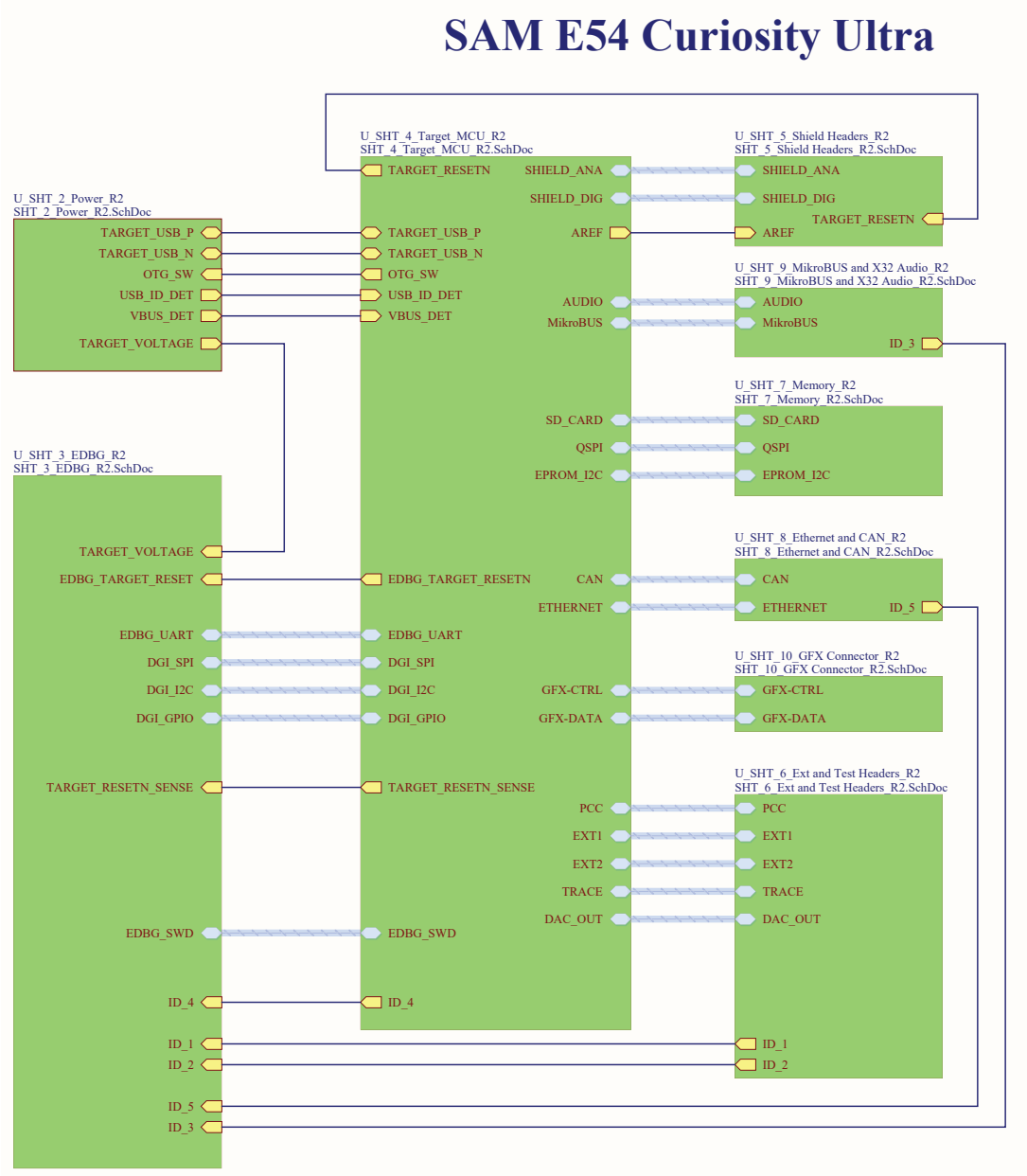

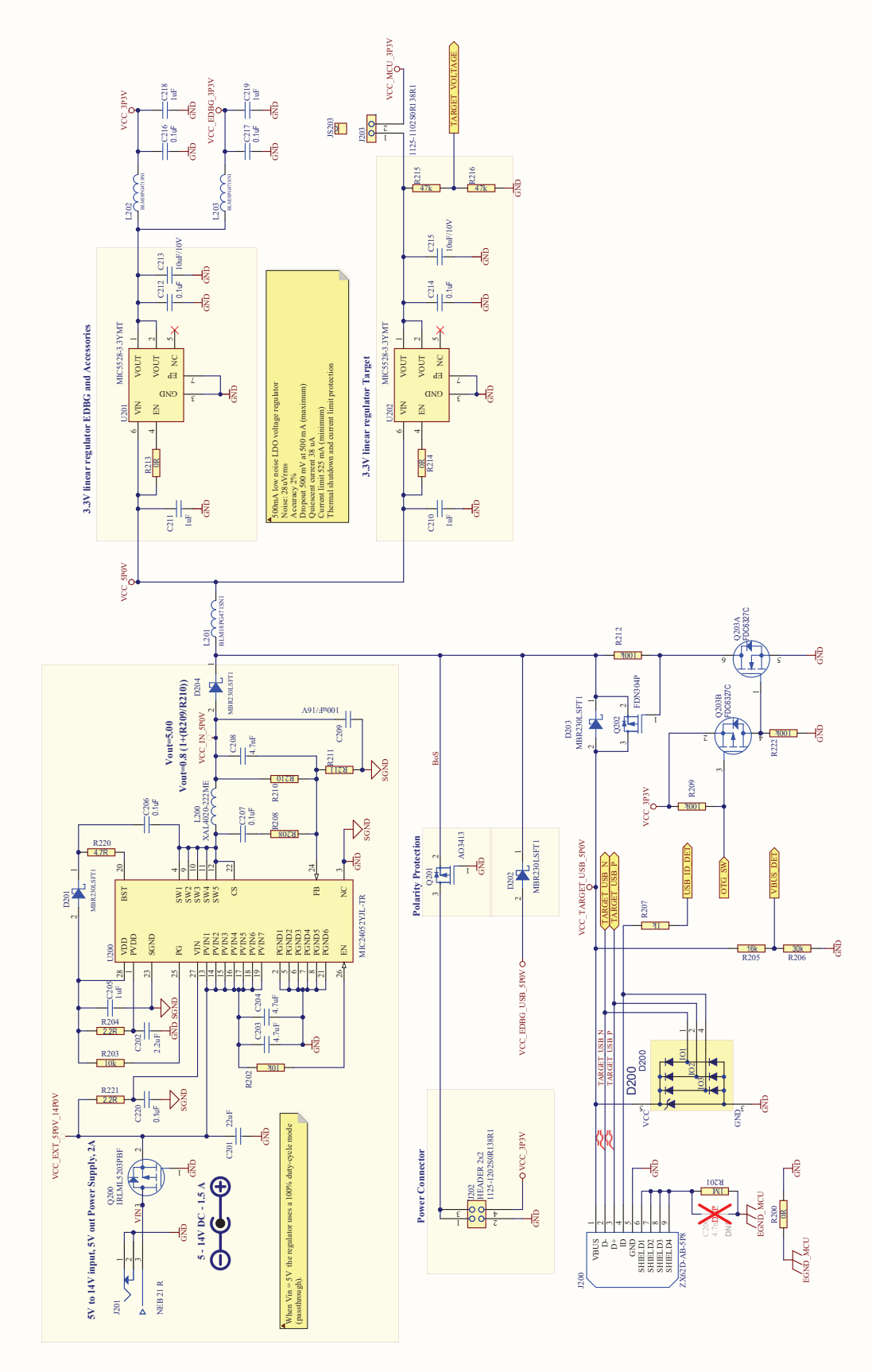
3.3V linear regulator EDBG and Accessories
3.3V linear regulator Target
500mA low noise LDO voltage regulator
Noise: 28uVrms
Accuracy 2%
Dropout 500 mV at 500 mA (maximum)
Quiescent current 38 uA
Current limit 525 mA (minimum)
Thermal shutdown and current limit protection
5V to 14V input, 5V out Power Supply, 2A
5 - 14V DC - 1.5 A
When Vin = 5V the regulator uses a 100% duty-cycle mode (passthrough).
Vout=5.00
Vout=0.8 (1+(R209/R210))
Polarity Protection
Power Connector
TARGET VOLTAGE
USB ID DET
OTG SW
VBUS DET

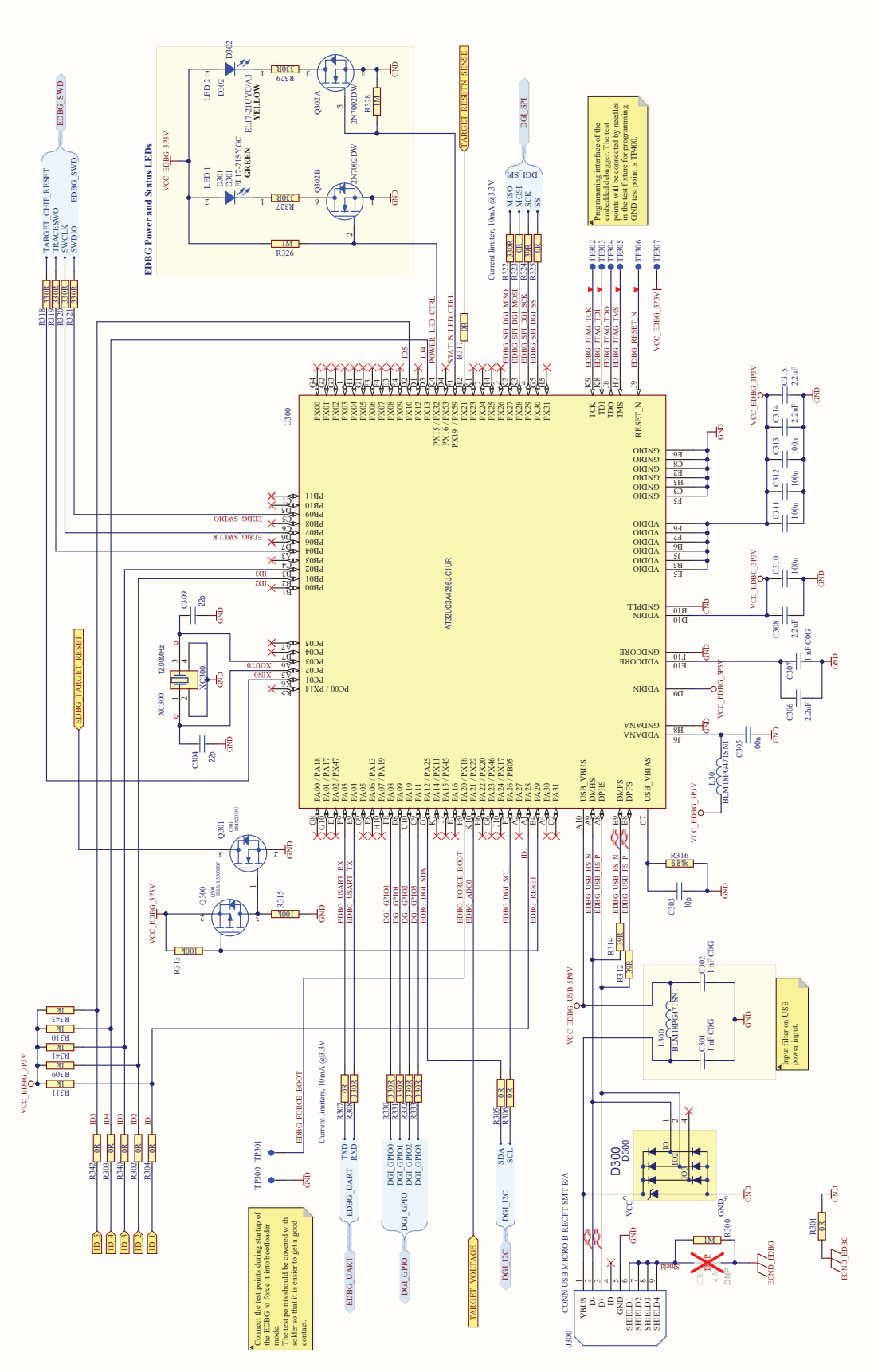
EDBG Power and Status LEDs
Programming interface of the embedded debugger. The test points will be connected by needles in the final fixture for programming. GND test point is TP400.
Input filter on USB power input.
Current limiters, 10mA @3.3V
Current limiter, 10mA @3.3V
Connect the test points during startup of the EDBG to force it into bootloader mode. The test points should be covered with solder so that it is easier to get a good contact.
CONN USB MICRO B RECPT SMT R/A
AT32UC3A4256-CTUR

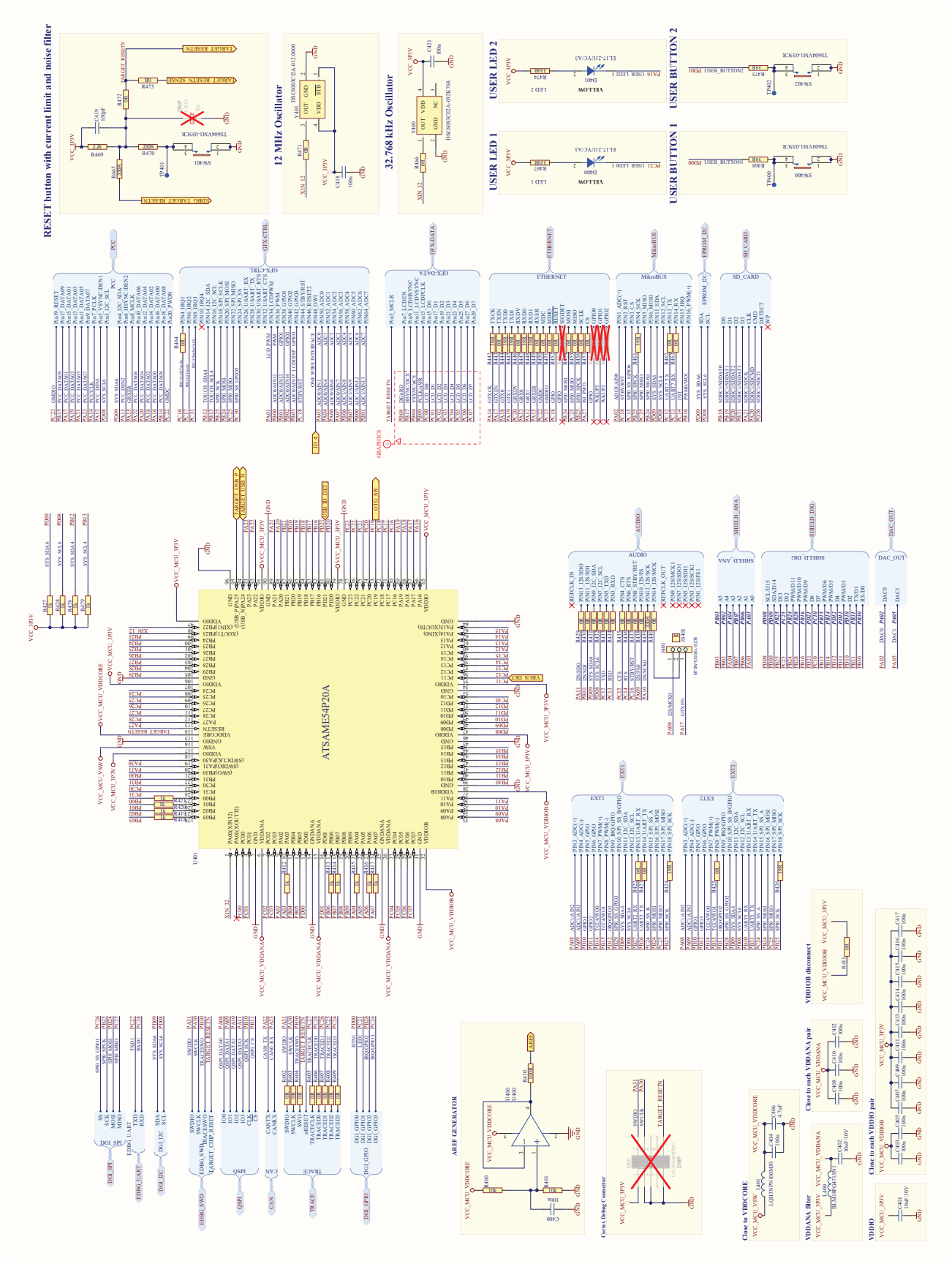
RESET button with current limit and noise filter
12 MHz Oscillator
32.768 kHz Oscillator
USER LED 2
USER LED 1
USER BUTTON 2
USER BUTTON 1
ETHERNET
MikroBUS
SD_CARD
AUDIO
SHIELD_ANA
SHIELD_DIG
ATSAME54P20A
AREF GENERATOR
Cortex Debug Connector
Close to each VDDANA pair
Close to VDDCORE
VDDANA filter
Close to each VDDIO pair
VDDIO
VDDIOB disconnect

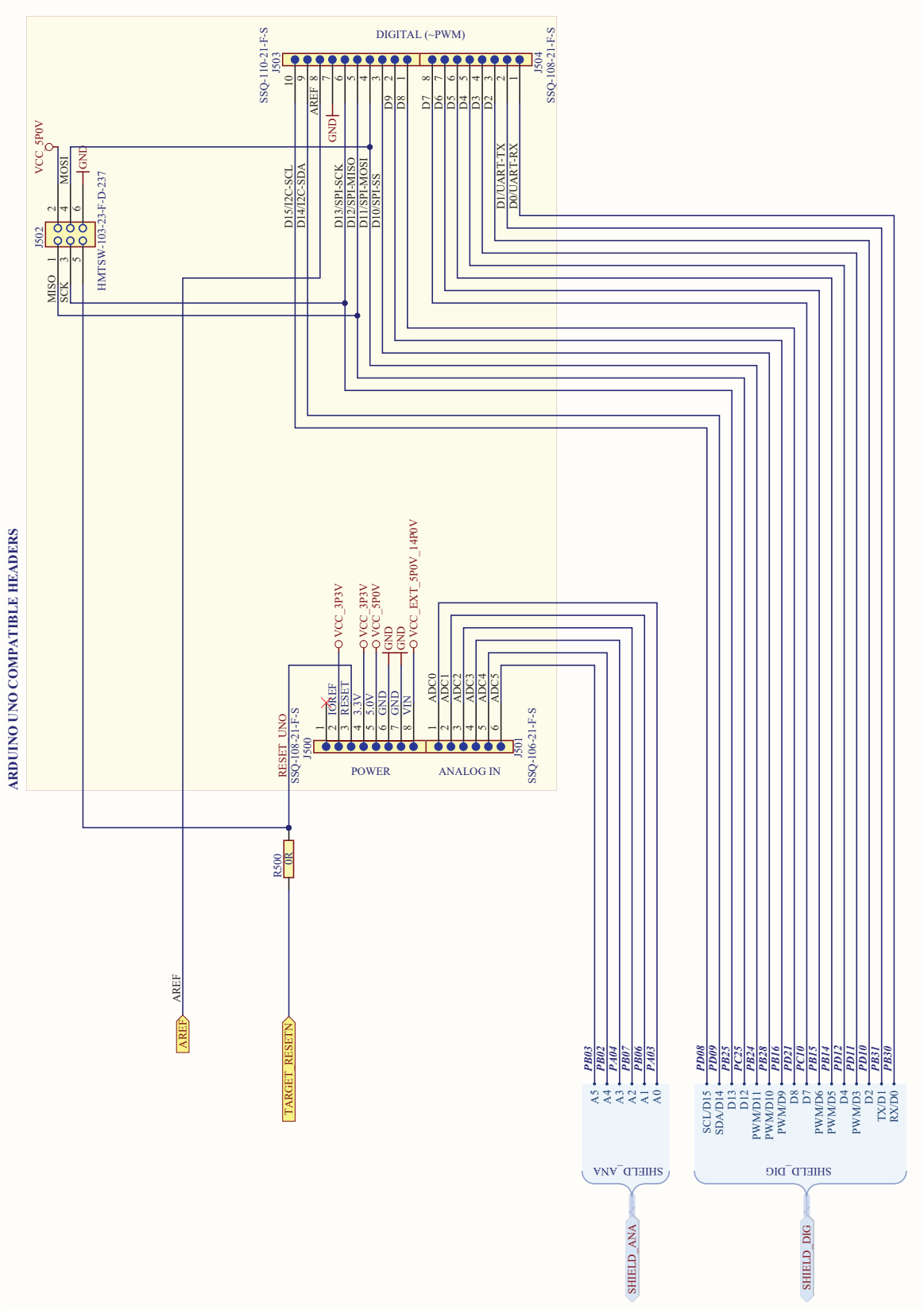
ARDUINO UNO COMPATIBLE HEADERS
DIGITAL (~PWM)
SSQ-110-21-F-S
J503
SSQ-108-21-F-S
J504
D15/I2C-SCL
D14/I2C-SDA
AREF
GND
D13/SPI-SCK
D12/SPI-MISO
D11/SPI-MOSI
D10/SPI-SS
D9
D8
D7
D6
D5
D4
D3
D2
D1/UART-TX
D0/UART-RX
VCC_5P0V
MOSI
GND
J502
MISO
SCK
HMTSW-103-23-F-D-237
RESET_UNO
SSQ-108-21-F-S
J500
IOREF
RESET
3.3V
5.0V
GND
GND
VIN
VCC_3P3V
VCC_3P3V
VCC_5P0V
GND
GND
VCC_EXT_5P0V_14P0V
POWER
ADC0
ADC1
ADC2
ADC3
ADC4
ADC5
ANALOG IN
SSQ-106-21-F-S
J501
R500
0R
AREF
AREF
TARGET_RESETN
PB03
PB02
PA04
PB07
PB06
PA03
A5
A4
A3
A2
A1
A0
SHIELD_ANA
PD08
PD09
PB25
PC25
PB24
PB28
PB16
PD21
PC10
PB15
PB14
PD12
PD11
PD10
PB31
PB30
SCL/D15
SDA/D14
D13
D12
PWM/D11
PWM/D10
PWM/D9
D8
D7
PWM/D6
PWM/D5
D4
PWM/D3
D2
TX/D1
RX/D0
SHIELD_DIG
SHIELD_ANA
SHIELD_DIG

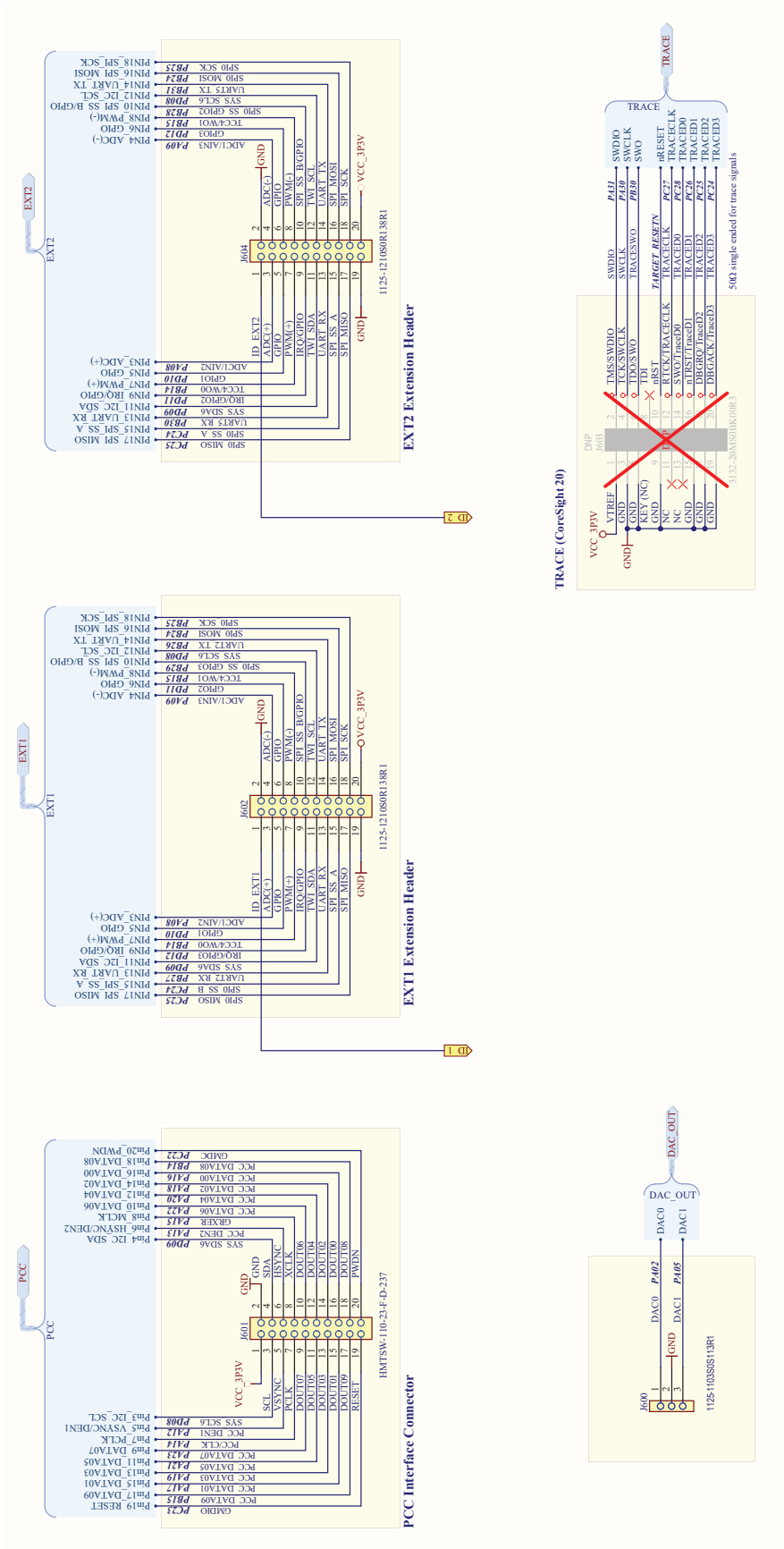
EXT2 Extension Header
EXT1 Extension Header
PCC Interface Connector
TRACE (CoreSight 20)
1125-1210S0R138R1
HMTSW-110-23-F-D-237
1125-1103S0S13R1
50Ω single ended for trace signals

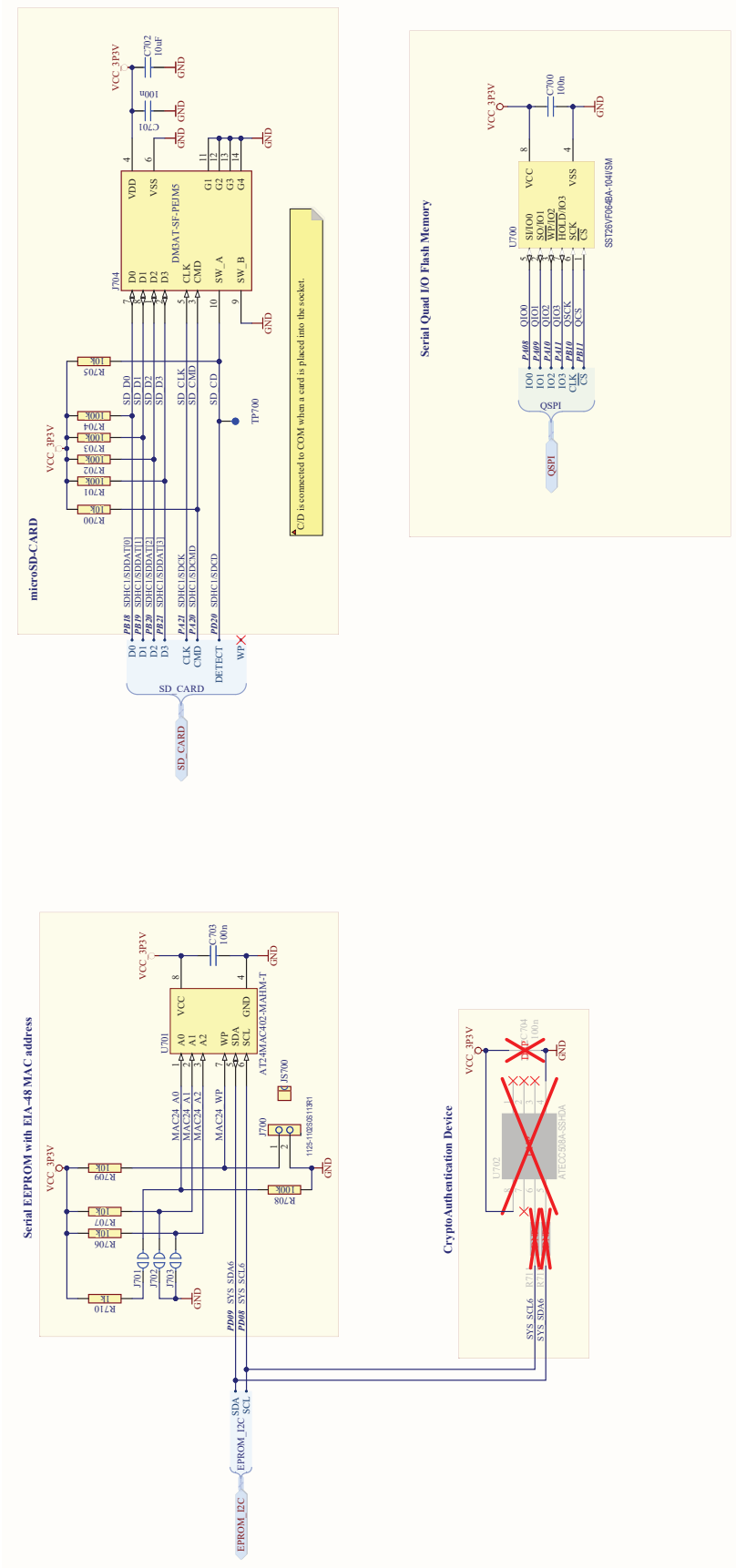
microSD-CARD
Serial Quad I/O Flash Memory
Serial EEPROM with EIA-48 MAC address
CryptoAuthentication Device
SD_CARD
QSPI
EPROM_I2C
C/D is connected to COM when a card is placed into the socket.

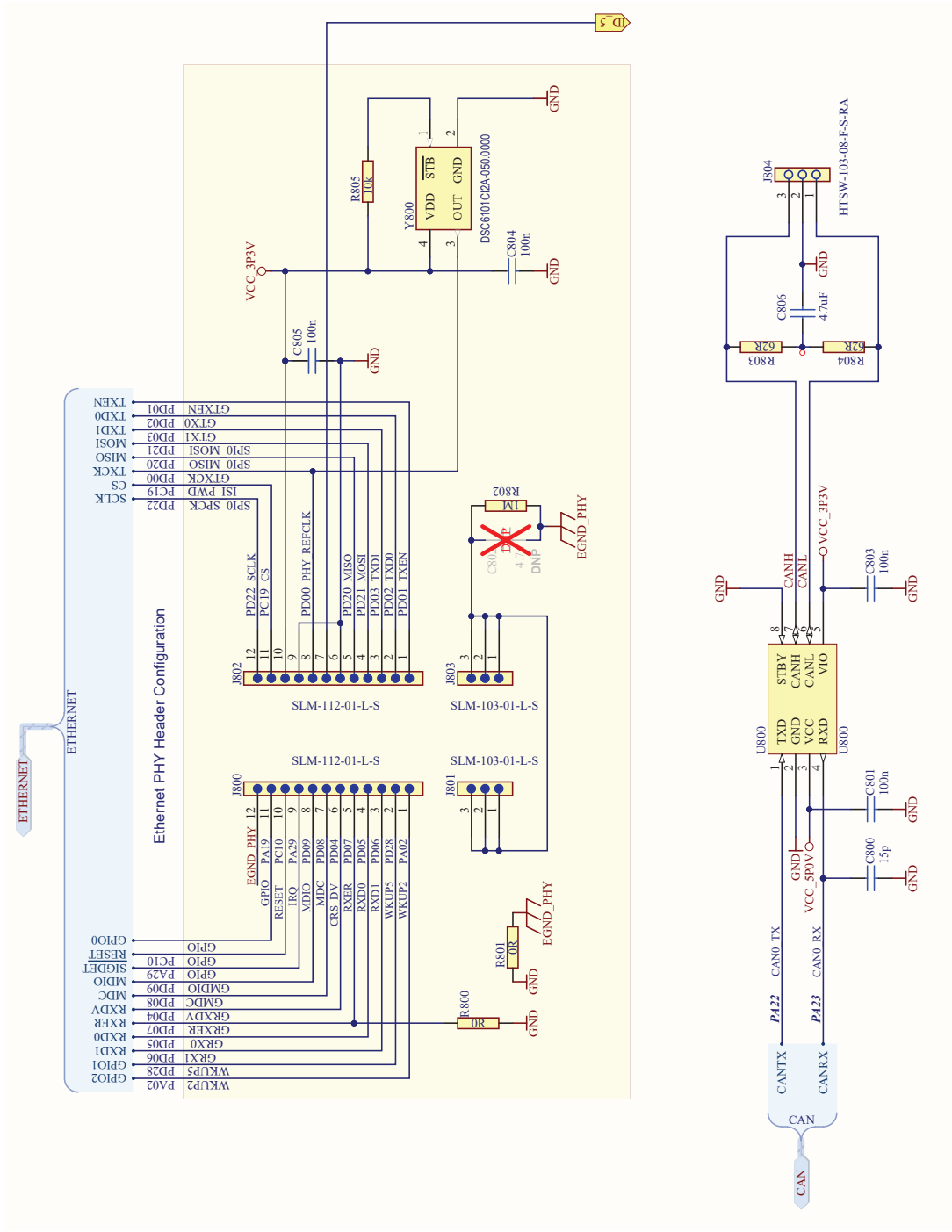
Ethernet PHY Header Configuration
ETHERNET
SLM-112-01-L-S
SLM-103-01-L-S
J802
J803
J800
J801
Y800
DSC6101CI2A-050.0000
R805
10k
C804
100n
C805
100n
R802
1M
R801
0R
R800
0R
VCC_3P3V
GND
EGND_PHY
J804
HTSW-103-08-F-S-RA
C806
4.7uF
R803
62R
R804
62R
U800
STBY
CANH
CANL
VIO
TXD
GND
VCC
RXD
C803
100n
C801
100n
C800
15p
VCC_5P0V
CAN0_TX
CAN0_RX
PA22
PA23
CANTX
CANRX
CAN

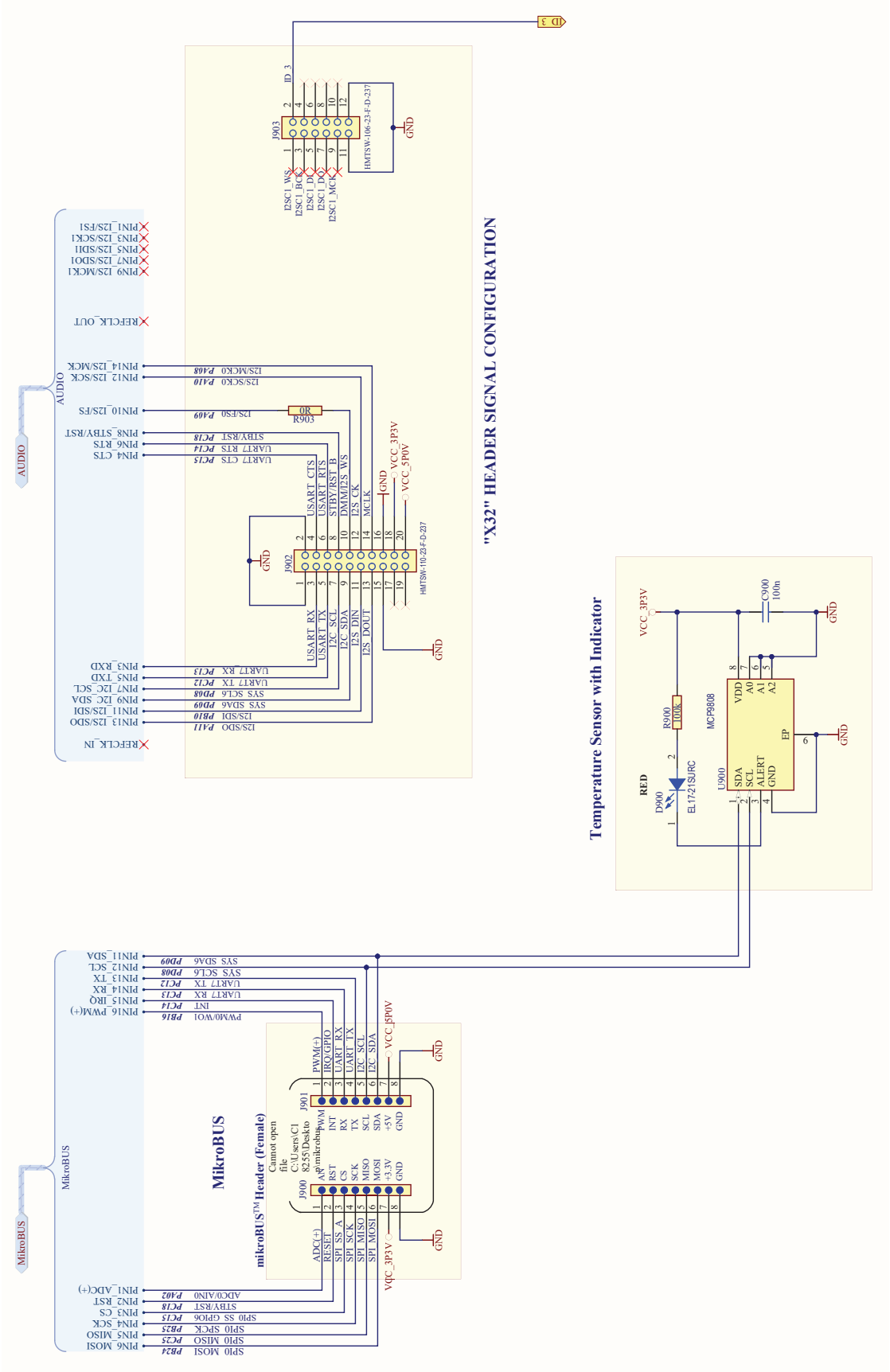
"X32" HEADER SIGNAL CONFIGURATION
Temperature Sensor with Indicator
MikroBUS
mikroBUS™ Header (Female)
Cannot open file C:\Users\C1825\Deskto
AUDIO
MikroBUS
RED
EL1721SURC
MCP9808
HMTSW-106-23-F-D-237
HMTSW-110-23-F-D-237
R903
R900
C900
100n
J902
J903
J900
J901
U900
D900
VCC_3P3V
VCC_5P0V
GND
ID_3
USART_CTS
USART_RTS
STBY/RST_B
DMM/I2S_WS
I2S_CK
MCLK
USART_RX
USART_TX
I2C_SCL
I2C_SDA
I2S_DIN
I2S_DOUT
I2S/SDO PA11
I2S/SDI PB10
SYS_SDA6 PD09
SYS_SCL6 PD08
UART7_TX PC12
UART7_RX PC13
I2S/SCK0 PA10
I2S/MCK0 PA08
I2S/FS0 PA09
UART7_CTS PC15
UART7_RTS PC14
STBY/RST PC18
PIN1_I2S/FS1
PIN2_I2S/SCK1
PIN3_I2S/SDI1
PIN7_I2S/SDO1
PIN9_I2S/MCK1
REFCLK_OUT
REFCLK_IN
PIN14_I2S/MCK
PIN12_I2S/SCK
PIN10_I2S/FS
PIN8_STBY/RST
PIN6_RTS
PIN4_CTS
PIN13_I2S/SDO
PIN11_I2S/SDI
PIN9_I2C_SDA
PIN7_I2C_SCL
PIN5_TXD
PIN3_RXD
PIN16_PWM(+)
PIN15_IRQ
PIN14_RX
PIN13_TX
PIN12_SCL
PIN11_SDA
PIN1_ADC(+)
PIN2_RST
PIN3_CS
PIN4_SCK
PIN5_MISO
PIN6_MOSI
PWM(+)
IRQ/GPIO
UART_RX
UART_TX
I2C_SCL
I2C_SDA
ADC(+)
RESET
SPI_SS_A
SPI_SCK
SPI_MISO
SPI_MOSI
RST
CS
SCK
MISO
MOSI
+3.3V
+5V
INT
RX
TX
SCL
SDA
PWM
VDD
A0
A1
A2
EP
ALERT

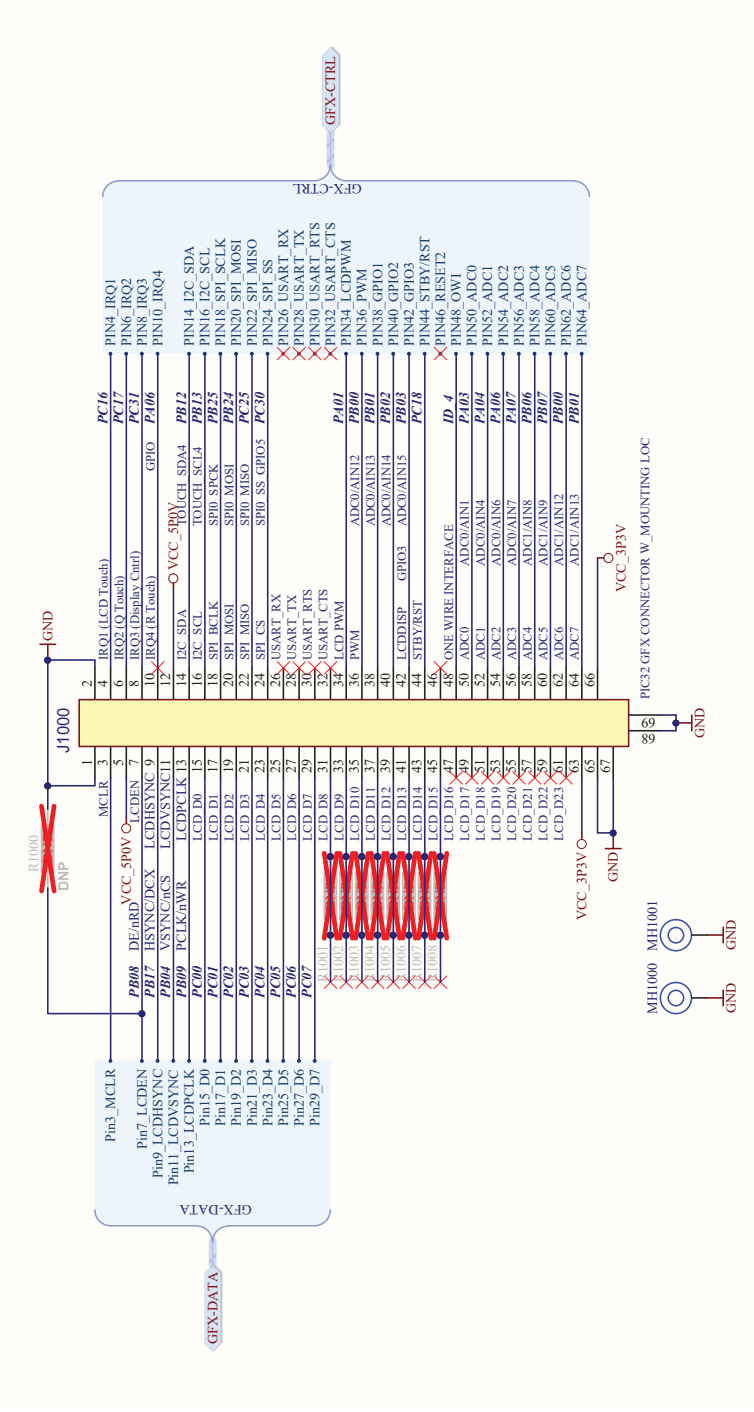
GFX-CTRL
GFX-DATA
J1000
PIC32 GFX CONNECTOR W_MOUNTING LOC
R1000
DNP
GND
VCC_5P0V
VCC_3P3V
MH1000
MH1001
Pin3_MCLR
Pin7_LCDEN
Pin9_LCDHSYNC
Pin11_LCDVSYNC
Pin13_LCDPCLK
Pin15_D0
Pin17_D1
Pin19_D2
Pin21_D3
Pin23_D4
Pin25_D5
Pin27_D6
Pin29_D7
PIN4_IRQ1
PIN6_IRQ2
PIN8_IRQ3
PIN10_IRQ4
PIN14_I2C_SDA
PIN16_I2C_SCL
PIN18_SPI_SCLK
PIN20_SPI_MOSI
PIN22_SPI_MISO
PIN24_SPI_SS
PIN26_USART_RX
PIN28_USART_TX
PIN30_USART_RTS
PIN32_USART_CTS
PIN34_LCDPWM
PIN36_PWM
PIN38_GPIO1
PIN40_GPIO2
PIN42_GPIO3
PIN44_STBY/RST
PIN46_RESET2
PIN48_OW1
PIN50_ADC0
PIN52_ADC1
PIN54_ADC2
PIN56_ADC3
PIN58_ADC4
PIN60_ADC5
PIN62_ADC6
PIN64_ADC7

2.2 Bill of Materials

Qty	Designator	Value	Description
1	C201	22uF	Ceramic capacitor, SMD 1206, X5R, 25V, 10%
1	C202	2.2uF	Ceramic capacitor, SMD 0805, X5R, 25V, 10%
3	C203, C204, C806	4.7uF	Ceramic capacitor, SMD 0805, X5R, 25V, ±10 %
5	C205, C210, C211, C218, C219	1uF	CAP CER 1UF 16V 10% X5R 0603
7	C206, C207, C212, C214, C216, C217, C220	0.1uF	CAP CER 0.1UF 50V 10% X7R 0402
1	C208	4.7nF	Ceramic capacitor, SMD 0402, X7R, 25V, +/-10%
1	C209	100uF/16V	Ceramic capacitor, SMD 1210, X5R, 16V, 20%
4	C213, C215, C401, C402	10uF/10V	Ceramic capacitor, SMD 0603, X5R, 10V, 10UF Â± 20%
3	C301, C302, C307	1 nF C0G	Ceramic capacitor, SMD 0402, C0G, 50V, +/-5%
1	C303	10p	Ceramic capacitor, SMD 0402, NP0, 50V, +/-5%
2	C304, C309	22p	Ceramic capacitor, SMD 0402, NP0, 50V, +/-5%
30	C305, C310, C311, C312, C313, C400, C403, C404, C405, C407, C408, C409, C410, C411, C412, C413, C414, C415, C416, C417, C418, C421, C700, C701, C703, C801, C803, C804, C805, C900	100n	Ceramic capacitor, SMD 0402, X7R, 16V, +/-10%
4	C306, C308, C314, C315	2.2uF	Ceramic capacitor, SMD 0402, X5R, 6.3V, +/-20%
1	C406	4.7uF	Ceramic capacitor, SMD 0603, X5R, 10V, 10% (de31036)
1	C419	100pF	Ceramic Capacitor, SMD 0402, COG, 50V, +/-5%
1	C702	10uF	Ceramic capacitor, SMD 0805, X5R, 10V, 10 %, (de19441)
1	C800	15p	Ceramic capacitor, SMD 0402, NP0, 50V, +/-5%
2	D200, D300	TPD3E001DRLR	TVS DIODE LOW-CAP 3-CH ESD-Protection for HS Data Interfaces SOT553
4	D201, D202, D203, D204	MBR230LSFT1	2A, 30V,Vf=0.43V, Schottky diode ,SOD-123FL
1	D301	EL17-21SYGC	LED, Green, Wave length=575nm, SMD 0805, ±70°
3	D302, D400, D401	EL17-21UYC/A3	LED, Yellow, Wave length=591nm, SMD 0805, ±70°
1	D900	EL17-21SURC	LED, Red, Wave length=639nm, SMD 0805, Â±70Â°
4	E1, E2, E3, E4	SJ-5076	2.8mm adhesive feet,diam 8.0mm
1	J200	ZX62D-AB-5P8	Micro USB AB Connector, Standard SMT + DIP
1	J201	NEB 21 R	Through hole DC jack 2.1mm, 12V, 3A
1	J202	1125-1202S0R138R1	Pin header, 2x2, Right Angle, 2.54mm, THT
1	J203	Pin header 1x2 RA	1x2 pin header, right angle, 2.54 mm pitch, THT
1	J300	CONN USB MICRO B RECPT SMT R/A	micro B USB 2.0 Receptacle Connector 5 Position Surface Mount, Right Angle; Through Hole
1	J401	MTSW-103-08-L-S-276	1x3 pin header, 2.54 mm pitch, THM
2	J500, J504	SSQ-108-21-F-S	1x8 receptacle pin header, low insertion force, 2.54mm pitch THM, Pin in Paste
1	J501	SSQ-106-21-F-S	1x6 receptacle pin header, 2.54mm pitch THM
1	J502	HMTSW-103-23-F-D-237	2x3 pin header, 2.54mm pitch, Pin-in-Paste THM
1	J503	SSQ-110-21-F-S	1x10 receptacle pin header, low insertion force, 2.54mm pitch THM, Pin in Paste
1	J600	1125-1103S0S113R1	1x3 pin Header, 2.54mm pitch, TH
2	J601, J902	HMTSW-110-23-F-D-237	2x10 pin header, 2.54mm pitch, Pin-in-Paste THM

© 2019 Microchip Technology Inc.

.....continued

Qty	Designator	Value	Description
2	J602, J604	1125-1210S0R138R1	Pin header, 2x10, Right Angle, 2.54mm, THM
1	J700	1125-1102S0S113R1	1x2 pin header, 2.54mm pitch, Pin-in-Paste THM
1	J704	DM3AT-SF-PEJM5	Micro SD Card Connector, (8 + 2) Position Push - Push, SMT, Right Angle Gold
2	J800, J802	SLM-112-01-L-S	1x12 - THM - Female Receptacle - 0.05 pitch
2	J801, J803	SLM-103-01-L-S	1x3 - THM - Female Receptacle - 0.05 pitch
1	J804	RT Pin Header 1X3	1x3 pin header, 2.54 mm pitch, Right angle THM
2	J900, J901	610-91-08GB00	PINREX, 2.54mm 1x8 Female Header Straight, THM, H=8.5mm, Gold Flash, Black Insulator
1	J903	HMTSW-106-23-F-D-237	2x6 pin header, 2.54mm pitch, Pin-in-Paste, 1mm hole
1	J1000	PIC32 GFX CONNECTOR W_MOUNTING LOC	PIC32 GFX CONNECTOR W_MOUNTING LOC_2199230-3
3	JS203, JS401, JS700	SNT-100-BK-G	Jumper cap for 2.54mm pinheader
1	L200	XAL4020-222ME	2.2ÂµH Shielded Power Inductor, 4x4x2mm, Isat=5.6A , Irms=4.0A , DCR=35.2mÎ©
6	L201, L202, L203, L300, L301, L400	BLM18PG471SN1	SMD RF inductor 0603. Z=470Ohm (@100MHz), Max R(dc)=0.65Ohm, Max current=1A
1	L401	LQH3NPN100MJ0	10uH power inductor, Isat = 560mA , Itemp = 710mA, Rdc = 0.360ohm
2	MH1000, MH1001	ROUND SMT STANDOFF M2.5 H2.5mm	Round Standoff Threaded M2.5x0.45 Steel 0.098" (H2.50mm)
2	Q200, Q300	IRLML5203PBF	P-ch. MOSFET. -30V, -3.0A continuous, -24A Peak. RDS(ON)=0.098Ohm@VGS=-10V, RDS(ON)=0.165Ohm@VGS=-4.5V, -2.5V<VGS(th)<-1.0V
1	Q201	AO3413	P-CH MOSFET, SOT-23, 20V, 3A, Rds(on)=0.097mOhm@3A, 4.5V
1	Q202	FDN304P	P-Channel Power MOSFET 20V 2.4A cont 10A peak
1	Q203	FDC6327C	Dual N/P-ch MOSFET, 20V, 2.7A/-1.9A cont, 8A/-8A pulse, RDS(ON)<0.08/0.17Ohm@VGS=4.5V, VGS(th)<1.5/-1.5V, SSOT6
59	R200, R213, R214, R301, R302, R303, R304, R305, R306, R307, R317, R323, R325, R340, R342, R402, R403, R404, R405, R406, R407, R408, R409, R411, R422, R423, R425, R429, R430, R431, R432, R433, R434, R435, R436, R437, R438, R440, R443, R446, R449, R450, R451, R452, R454, R455, R456, R457, R462, R463, R464, R466, R471, R472, R473, R500, R800, R801, R903	0R	RES 0.0 OHM 1/16W 0402 SMD
2	R201, R802	1M	Thick film resistor, SMD 0402, 1/16W, 1%
10	R202, R203, R400, R401, R700, R705, R706, R707, R709, R805	10k	Thick film resistor, SMD 0402, 1/16W, 1%
2	R204, R221	2.2R	Thick film resistor, SMD 0603, 1/10W, 1%
1	R205	16k	Thick film resistor, SMD 0402, 1/16W, 1%
1	R206	30k	Thick film resistor, SMD 0402, 1/16W, 1%
21	R207, R309, R310, R311, R341, R343, R412, R413, R414, R415, R416, R417, R418, R419, R420, R421, R427, R428, R478, R479, R710	1k	Thick film resistor, SMD 0402, 1/16W, 1%
1	R208	RES 19.6K OHM 1% 1/16W 0402	RES 19.6K OHM 1% 1/16W 0402
11	R209, R212, R222, R313, R315, R701, R702, R703, R704, R708, R900	100k	Thick film resistor, SMD 0402, 1/16W, 1%
1	R210	RES 2.49K OHM 1% 1/16W 0402	RES 2.49K OHM 1% 1/16W 0402
1	R211	RES SMD 475 OHM 1% 1/16W 0402	RES SMD 475 OHM 1% 1/16W 0402
2	R215, R216	47k	Thick film resistor, SMD 0402, 1/16W, 1%

© 2019 Microchip Technology Inc.

.....continued

Qty	Designator	Value	Description
1	R220	4.7R	Thick film resistor, SMD 0402, 1/16W, 1%
3	R300, R326, R328	1M	Thick film resistror, SMD 0402, 1/16W, 1%
17	R308, R318, R319, R320, R321, R322, R327, R329, R330, R331, R332, R333, R439, R465, R467, R470, R474	330R	Thick film resistor, SMD 0402, 1/16W, 1%
13	R312, R314, R324, R424, R426, R442, R444, R445, R447, R448, R461, R468, R475	39R	Thick film resistor, SMD 0402, 1/16W, 1%
1	R316	6.81k	Thick film resistor, SMD 0402, 1/16W, 1%
1	R410	100R	Thick film resistor, SMD 0402, 1/16W, 1%
1	R469	2.2k	Thick film resistor, SMD 0402, 1/16W, 1%
2	R803, R804	62R	Thick film resistor, SMD 1210, 0.5W, 1%
2	S1, S2	M2.5x5mm Pan Phillip Screw	M2.5x5mm Pan Phillip Screw
3	SW400, SW401, SW402	TS604VM1-035CR	SWITCH, SMD, 260gf, 6.4mm X 6.2mm
1	U200	MCHP BUCK REGULATOR 12V 6A MIC24052 QFN-28	MCHP BUCK REGULATOR 12V 6A MIC24052 QFN-28
2	U201, U202	MIC5528-3.3YMT	LDO 3.3V 0.5A 6TDFN
1	U300	AT32UC3A4256J-C1UR	EDBG controller
1	U400	MCP6001UT-I/OT	Single Op Amplifier, 1MHz, Low power, SOT-23-5
1	U401	ATSAME54P20A	Atmel 32-bit RISC MCU
1	U700	SST26VF064B-104ISM	2.5V/3.0V 64 Mbit Serial Quad I/O (SQI) Flash Memory
1	U701	AT24MAC402-MAHM-T	2kbit I2C EEPROM, single EUI-48 MAC, 1.7-5.5V, 2x3mm UDFN
1	U800	ATA6563	High-speed CAN Transceiver w Standby Mode CAN FD Ready
1	U900	MCP9808	Â±0.5Â°C Maximum Accuracy Digital Temp Sensor, I2C/SMBus
1	XC300	12.00MHz	Fox FQ5032B 12.0000MHz 20pF SMD crystal 738B-12
1	Y400	OSCILLATOR 32.768KHz DSC60xxL3.2xW2.5H0.90	OSCILLATOR 32.768KHz 1.71-3.3V DSC60xxL3.2xW2.5H0.9
1	Y401	OSCILLATOR 12.000MHz DSC60xxL3.2xW2.5H0.90	OSCILLATOR 12.000MHz 1.71-3.3V DSC60xxL3.2xW2.5H0.9
1	Y800	OSCILLATOR 50MHz DSC61xxL3.2xW2.5H0.90	OSCILLATOR 50MHz 1.71-3.3V DSC60xxL3.2xW2.5H0.9

© 2019 Microchip Technology Inc.

The Microchip Website

Microchip provides online support via our website at http://www.microchip.com/. This website is used to make files and information easily available to customers. Some of the content available includes:

- **Product Support** – Data sheets and errata, application notes and sample programs, design resources, user's guides and hardware support documents, latest software releases and archived software
- **General Technical Support** – Frequently Asked Questions (FAQs), technical support requests, online discussion groups, Microchip design partner program member listing
- **Business of Microchip** – Product selector and ordering guides, latest Microchip press releases, listing of seminars and events, listings of Microchip sales offices, distributors and factory representatives

Product Change Notification Service

Microchip's product change notification service helps keep customers current on Microchip products. Subscribers will receive email notification whenever there are changes, updates, revisions or errata related to a specified product family or development tool of interest.

To register, go to http://www.microchip.com/pcn and follow the registration instructions.

Customer Support

Users of Microchip products can receive assistance through several channels:

- Distributor or Representative
- Local Sales Office
- Embedded Solutions Engineer (ESE)
- Technical Support

Customers should contact their distributor, representative or ESE for support. Local sales offices are also available to help customers. A listing of sales offices and locations is included in this document.

Technical support is available through the web site at: http://www.microchip.com/support

© 2019 Microchip Technology Inc.

Product Identification System

To order or obtain information, e.g., on pricing or delivery, refer to the factory or the listed sales office.

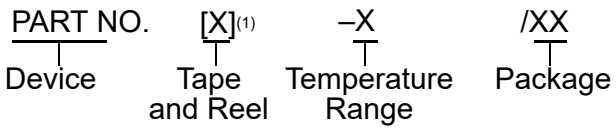

Device:	Device A, Feature A, (Package A) Device B, Feature B, (Package B)	
Tape & Reel Option:	Blank	= Tube
	T	= Tape & Reel
Temperature Range:	I	= -40°C to +85°C (Industrial)
	E	= -40°C to +125°C (Extended)
Package:	AA	= Package AA
	BB	= Package BB

Examples:

- MCPXXXXXAT-E/AA: Tape and Reel, Extended temperature, XAA package
- MCPXXXXXBT-E/BB: Tape and Reel Extended temperature, XBB package

Note:

1. Tape and Reel identifier only appears in the catalog part number description. This identifier is used for ordering purposes and is not printed on the device package. Check with your Microchip Sales Office for package availability with the Tape and Reel option.
2. Small form-factor packaging options may be available. Please check http://www.microchip.com/packaging for small-form factor package availability, or contact your local Sales Office.

Microchip Devices Code Protection Feature

Note the following details of the code protection feature on Microchip devices:

- Microchip products meet the specification contained in their particular Microchip Data Sheet.
- Microchip believes that its family of products is one of the most secure families of its kind on the market today, when used in the intended manner and under normal conditions.
- There are dishonest and possibly illegal methods used to breach the code protection feature. All of these methods, to our knowledge, require using the Microchip products in a manner outside the operating specifications contained in Microchip’s Data Sheets. Most likely, the person doing so is engaged in theft of intellectual property.
- Microchip is willing to work with the customer who is concerned about the integrity of their code.
- Neither Microchip nor any other semiconductor manufacturer can guarantee the security of their code. Code protection does not mean that we are guaranteeing the product as “unbreakable.”

Code protection is constantly evolving. We at Microchip are committed to continuously improving the code protection features of our products. Attempts to break Microchip’s code protection feature may be a violation of the Digital Millennium Copyright Act. If such acts allow unauthorized access to your software or other copyrighted work, you may have a right to sue for relief under that Act.

Legal Notice

Information contained in this publication regarding device applications and the like is provided only for your convenience and may be superseded by updates. It is your responsibility to ensure that your application meets with your specifications. MICROCHIP MAKES NO REPRESENTATIONS OR WARRANTIES OF ANY KIND WHETHER

© 2019 Microchip Technology Inc.

EXPRESS OR IMPLIED, WRITTEN OR ORAL, STATUTORY OR OTHERWISE, RELATED TO THE INFORMATION, INCLUDING BUT NOT LIMITED TO ITS CONDITION, QUALITY, PERFORMANCE, MERCHANTABILITY OR FITNESS FOR PURPOSE. Microchip disclaims all liability arising from this information and its use. Use of Microchip devices in life support and/or safety applications is entirely at the buyer's risk, and the buyer agrees to defend, indemnify and hold harmless Microchip from any and all damages, claims, suits, or expenses resulting from such use. No licenses are conveyed, implicitly or otherwise, under any Microchip intellectual property rights unless otherwise stated.

Trademarks

The Microchip name and logo, the Microchip logo, Adaptec, AnyRate, AVR, AVR logo, AVR Freaks, BesTime, BitCloud, chipKIT, chipKIT logo, CryptoMemory, CryptoRF, dsPIC, FlashFlex, flexPWR, HELDO, IGLOO, JukeBlox, KeeLoq, Kleer, LANCheck, LinkMD, maXStylus, maXTouch, MediaLB, megaAVR, Microsemi, Microsemi logo, MOST, MOST logo, MPLAB, OptoLyzer, PackeTime, PIC, picoPower, PICSTART, PIC32 logo, PolarFire, Prochip Designer, QTouch, SAM-BA, SenGenuity, SpyNIC, SST, SST Logo, SuperFlash, Symmetricom, SyncServer, Tachyon, TempTrackr, TimeSource, tinyAVR, UNI/O, Vectron, and XMEGA are registered trademarks of Microchip Technology Incorporated in the U.S.A. and other countries.

APT, ClockWorks, The Embedded Control Solutions Company, EtherSynch, FlashTec, Hyper Speed Control, HyperLight Load, IntelliMOS, Libero, motorBench, mTouch, Powermite 3, Precision Edge, ProASIC, ProASIC Plus, ProASIC Plus logo, Quiet-Wire, SmartFusion, SyncWorld, Temux, TimeCesium, TimeHub, TimePictra, TimeProvider, Vite, WinPath, and ZL are registered trademarks of Microchip Technology Incorporated in the U.S.A.

Adjacent Key Suppression, AKS, Analog-for-the-Digital Age, Any Capacitor, AnyIn, AnyOut, BlueSky, BodyCom, CodeGuard, CryptoAuthentication, CryptoAutomotive, CryptoCompanion, CryptoController, dsPICDEM, dsPICDEM.net, Dynamic Average Matching, DAM, ECAN, EtherGREEN, In-Circuit Serial Programming, ICSP, INICnet, Inter-Chip Connectivity, JitterBlocker, KleerNet, KleerNet logo, memBrain, Mindi, MiWi, MPASM, MPF, MPLAB Certified logo, MPLIB, MPLINK, MultiTRAK, NetDetach, Omniscient Code Generation, PICDEM, PICDEM.net, PICkit, PICtail, PowerSmart, PureSilicon, QMatrix, REAL ICE, Ripple Blocker, SAM-ICE, Serial Quad I/O, SMART-I.S., SQI, SuperSwitcher, SuperSwitcher II, Total Endurance, TSHARC, USBCheck, VariSense, ViewSpan, WiperLock, Wireless DNA, and ZENA are trademarks of Microchip Technology Incorporated in the U.S.A. and other countries.

SQTP is a service mark of Microchip Technology Incorporated in the U.S.A.

The Adaptec logo, Frequency on Demand, Silicon Storage Technology, and Symmcom are registered trademarks of Microchip Technology Inc. in other countries.

GestIC is a registered trademark of Microchip Technology Germany II GmbH & Co. KG, a subsidiary of Microchip Technology Inc., in other countries.

All other trademarks mentioned herein are property of their respective companies.

© 2019, Microchip Technology Incorporated, Printed in the U.S.A., All Rights Reserved.

ISBN: 978-1-5224-4870-9

AMBA, Arm, Arm7, Arm7TDMI, Arm9, Arm11, Artisan, big.LITTLE, Cordio, CoreLink, CoreSight, Cortex, DesignStart, DynamIQ, Jazelle, Keil, Mali, Mbed, Mbed Enabled, NEON, POP, RealView, SecurCore, Socrates, Thumb, TrustZone, ULINK, ULINK2, ULINK-ME, ULINK-PLUS, ULINKpro, µVision, Versatile are trademarks or registered trademarks of Arm Limited (or its subsidiaries) in the US and/or elsewhere.

Quality Management System

For information regarding Microchip's Quality Management Systems, please visit http://www.microchip.com/quality.

Worldwide Sales and Service

AMERICAS	ASIA/PACIFIC	ASIA/PACIFIC	EUROPE
Corporate Office 2355 West Chandler Blvd. Chandler, AZ 85224-6199 Tel: 480-792-7200 Fax: 480-792-7277 Technical Support: http://www.microchip.com/support Web Address: http://www.microchip.com **Atlanta** Duluth, GA Tel: 678-957-9614 Fax: 678-957-1455 **Austin, TX** Tel: 512-257-3370 **Boston** Westborough, MA Tel: 774-760-0087 Fax: 774-760-0088 **Chicago** Itasca, IL Tel: 630-285-0071 Fax: 630-285-0075 **Dallas** Addison, TX Tel: 972-818-7423 Fax: 972-818-2924 **Detroit** Novi, MI Tel: 248-848-4000 **Houston, TX** Tel: 281-894-5983 **Indianapolis** Noblesville, IN Tel: 317-773-8323 Fax: 317-773-5453 Tel: 317-536-2380 **Los Angeles** Mission Viejo, CA Tel: 949-462-9523 Fax: 949-462-9608 Tel: 951-273-7800 **Raleigh, NC** Tel: 919-844-7510 **New York, NY** Tel: 631-435-6000 **San Jose, CA** Tel: 408-735-9110 Tel: 408-436-4270 **Canada - Toronto** Tel: 905-695-1980 Fax: 905-695-2078	**Australia - Sydney** Tel: 61-2-9868-6733 **China - Beijing** Tel: 86-10-8569-7000 **China - Chengdu** Tel: 86-28-8665-5511 **China - Chongqing** Tel: 86-23-8980-9588 **China - Dongguan** Tel: 86-769-8702-9880 **China - Guangzhou** Tel: 86-20-8755-8029 **China - Hangzhou** Tel: 86-571-8792-8115 **China - Hong Kong SAR** Tel: 852-2943-5100 **China - Nanjing** Tel: 86-25-8473-2460 **China - Qingdao** Tel: 86-532-8502-7355 **China - Shanghai** Tel: 86-21-3326-8000 **China - Shenyang** Tel: 86-24-2334-2829 **China - Shenzhen** Tel: 86-755-8864-2200 **China - Suzhou** Tel: 86-186-6233-1526 **China - Wuhan** Tel: 86-27-5980-5300 **China - Xian** Tel: 86-29-8833-7252 **China - Xiamen** Tel: 86-592-2388138 **China - Zhuhai** Tel: 86-756-3210040	**India - Bangalore** Tel: 91-80-3090-4444 **India - New Delhi** Tel: 91-11-4160-8631 **India - Pune** Tel: 91-20-4121-0141 **Japan - Osaka** Tel: 81-6-6152-7160 **Japan - Tokyo** Tel: 81-3-6880- 3770 **Korea - Daegu** Tel: 82-53-744-4301 **Korea - Seoul** Tel: 82-2-554-7200 **Malaysia - Kuala Lumpur** Tel: 60-3-7651-7906 **Malaysia - Penang** Tel: 60-4-227-8870 **Philippines - Manila** Tel: 63-2-634-9065 **Singapore** Tel: 65-6334-8870 **Taiwan - Hsin Chu** Tel: 886-3-577-8366 **Taiwan - Kaohsiung** Tel: 886-7-213-7830 **Taiwan - Taipei** Tel: 886-2-2508-8600 **Thailand - Bangkok** Tel: 66-2-694-1351 **Vietnam - Ho Chi Minh** Tel: 84-28-5448-2100	**Austria - Wels** Tel: 43-7242-2244-39 Fax: 43-7242-2244-393 **Denmark - Copenhagen** Tel: 45-4450-2828 Fax: 45-4485-2829 **Finland - Espoo** Tel: 358-9-4520-820 **France - Paris** Tel: 33-1-69-53-63-20 Fax: 33-1-69-30-90-79 **Germany - Garching** Tel: 49-8931-9700 **Germany - Haan** Tel: 49-2129-3766400 **Germany - Heilbronn** Tel: 49-7131-72400 **Germany - Karlsruhe** Tel: 49-721-625370 **Germany - Munich** Tel: 49-89-627-144-0 Fax: 49-89-627-144-44 **Germany - Rosenheim** Tel: 49-8031-354-560 **Israel - Ra'anana** Tel: 972-9-744-7705 **Italy - Milan** Tel: 39-0331-742611 Fax: 39-0331-466781 **Italy - Padova** Tel: 39-049-7625286 **Netherlands - Drunen** Tel: 31-416-690399 Fax: 31-416-690340 **Norway - Trondheim** Tel: 47-72884388 **Poland - Warsaw** Tel: 48-22-3325737 **Romania - Bucharest** Tel: 40-21-407-87-50 **Spain - Madrid** Tel: 34-91-708-08-90 Fax: 34-91-708-08-91 **Sweden - Gothenberg** Tel: 46-31-704-60-40 **Sweden - Stockholm** Tel: 46-8-5090-4654 **UK - Wokingham** Tel: 44-118-921-5800 Fax: 44-118-921-5820

© 2019 Microchip Technology Inc.