NEW

DW1 Series (UL Recognized Product)

CONNECTOR
MB-0265-2
February 2016

RoHS Compliant

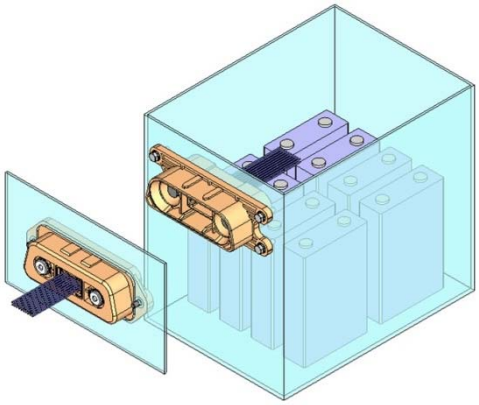

Drawing when DW1 is mounted



Receptacle (DW1R002ZH1)

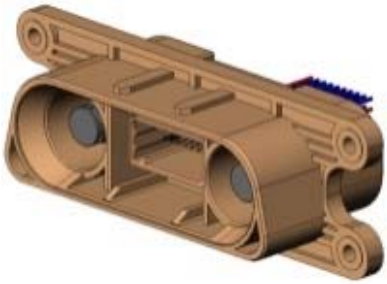

Plug (DW1P002ZH1)

<<Outline>>

The DW1 Series is a rack and panel connector with 2 contacts for high-current (500A). It enables the connection of the 2 contacts for power supply and 20 contacts for signal at once. The DW1 Series is suitable for use in a wide range of applications such as storage battery systems, power supply systems, UPS, and other power supply control equipments.
The DW1 Series is a UL recognized product.

Features

■UL Recognized Product: File No.E67741

■High-current: compatible with 500A

■Electrical Shock Prevention: protection cap for plug side

■Floating Amount: ±2.75mm

■Robust housing integrating complex power supply and signal area.

■Signal connector can be attached to the main unit using an exclusive jig.

■Signal area has a 2-point contacting structure contact.

■Power supply compatible with bus bar and cable connection.

General Specifications

■No. of Contacts:
2 pos. (power supply)
20 pos. (signal)

■Rated Current:
500A (power supply)
2A (signal)

■Rated Voltage:
600V (power supply) *Note 1
100V (signal)

■Contact Resistance (power supply):
0.2mΩ max. (initial)

■Durability: 20 times

■Operating Temperature:
-40Deg. C~+95Deg. C

Note 1: Please contact us when considering use in usage environments that exceed 600V.

JAE PMK Div. Proprietary. Copyright © 2016, Japan Aviation Electronics Industry, Ltd.

Ordering Information

Connector Main Unit

D W 1 R 0 0 2 Z H 1

- Series
- Connector Type
  R: Receptacle
  P: Plug
- No. of Contacts
  002: 2 pos. (shown in 3 digit)
- Connection Type
  Z: Others
- Plating of Contact Area
  H: Ag plating
- Modification Code

Connector for Signal (Housing)

D W 1 R 0 2 0

- Series
- Connector Type
  R: Receptacle
  P: Plug
- No. of Contacts
  020: 20 pos. (shown in 3 digit)

Connector for Signal (Contact)

D W 1 S 0 4 K 4 F 1

- Series
- Connection Type
  S: Crimp, socket
  P: Crimp, pin
- No. of Contacts
  04K: 4000 pcs.
  Reel Part Number K: unit of 1000 pcs. (Note 1)
- Applicable Cable Size
  4: 22AWG
- Plating of Contact Area
  F: Sn plating
- Modification Code

Note 1: An embossed reel contains 4,000 pcs.

JAE PMK Div. Proprietary. Copyright © 2016, Japan Aviation Electronics Industry, Ltd.

Product Drawing

1. Receptacle (Main Unit)

Part Number	DW1R002ZH1
SJ Drawing	SJ111306

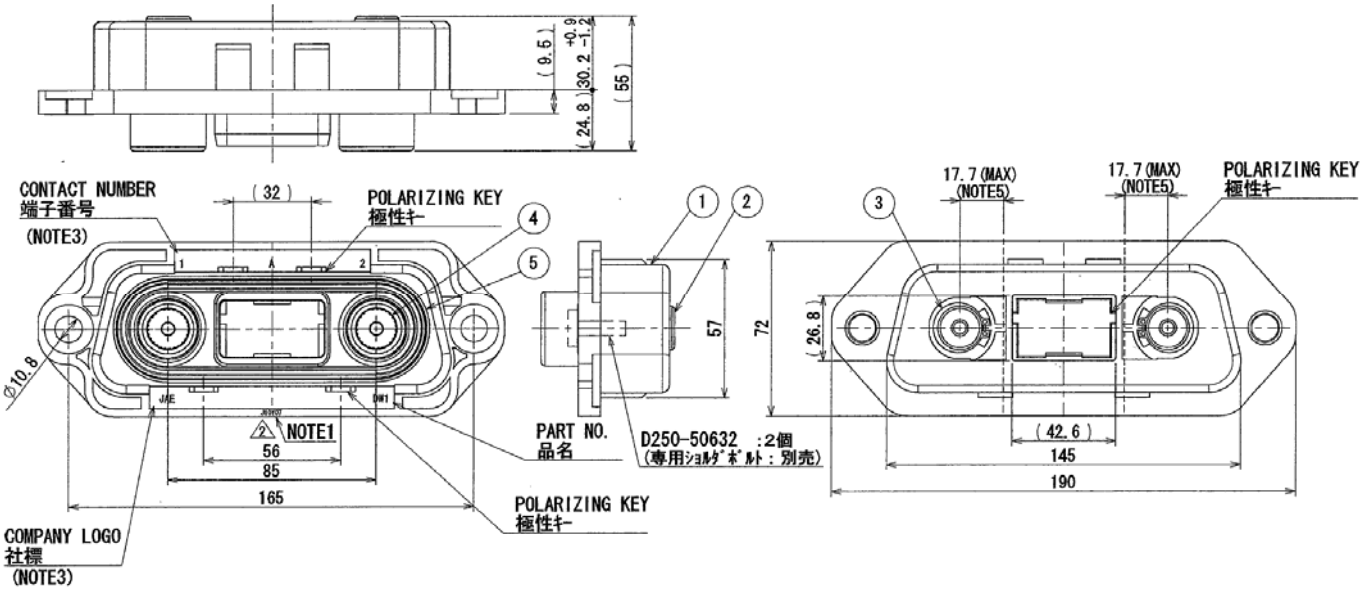

符号 NO.	名称 DESCRIPTION	個数 QTY.	材料 MATERIAL	仕上 FINISH	備考 REMARKS
5	SEAL RING	1	SILICON RUBBER	COLOR: GRAY	UL94 V-0
4	SPRING CONTACT	2	COPPER ALLOY	SILVER PLATING	—
3	C SNAP RING	2	STAINLESS STEEL	—	—
2	SOCKET CONTACT	2	COPPER ALLOY	SILVER PLATING	—
1	RECEPTACLE HOUSING	1	PPS	COLOR:BROWN	UL94 V-0

JAE PMK Div. Proprietary. Copyright © 2016, Japan Aviation Electronics Industry, Ltd.

2. Plug (Main Unit)

Part Number	DW1P002ZH1
SJ Drawing	SJ111307

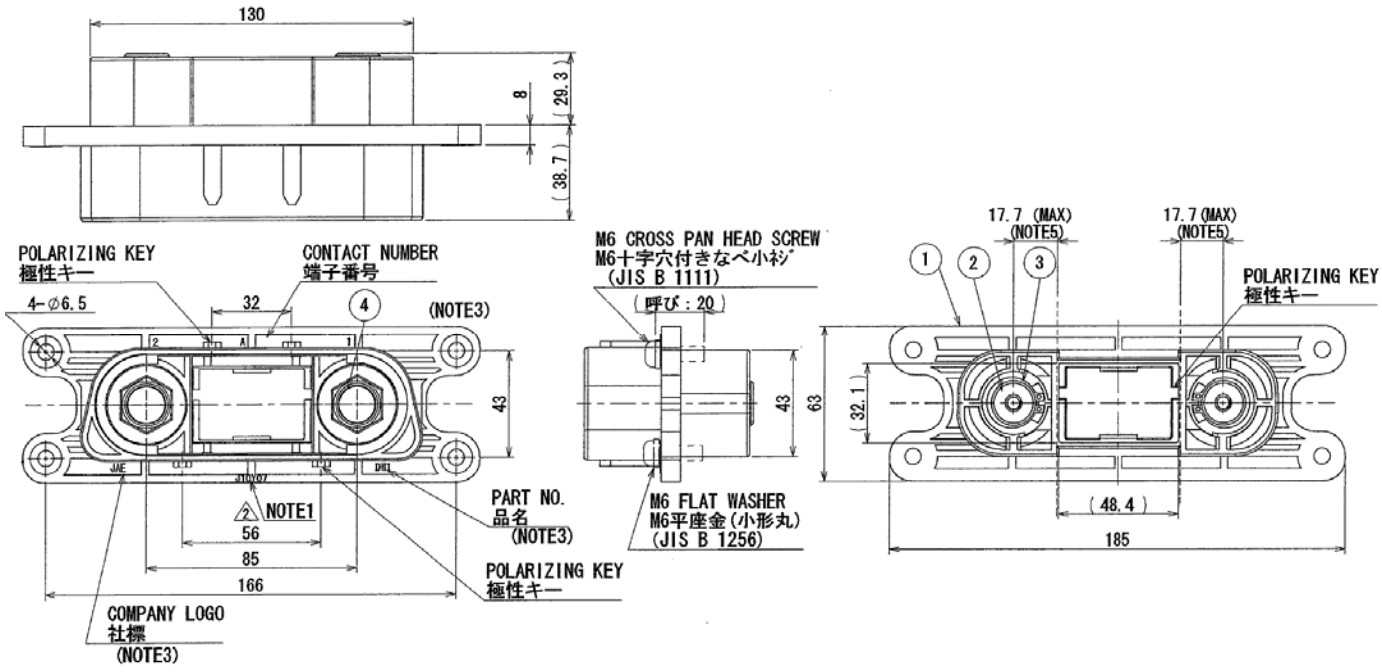

4	COVER CAP	2	PPS	COLOR:BLACK	UL94-V-0
3	C SNAP RING	2	STAINLESS STEEL	—	—
3	PIN CONTACT	2	COPPER ALLOY	SILVER PLATING	—
1	PLUG HOUSING	1	PPS	COLOR:BROWN	UL94-V-0
符号 NO.	名　称 DESCRIPTION	個　数 QTY.	材　料 MATERIAL	仕　上 FINISH	備　考 REMARKS

JAE PMK Div. Proprietary. Copyright © 2016, Japan Aviation Electronics Industry, Ltd.

3. Connector for Signal (Receptacle Side)

Part Number	DW1R020
SJ Drawing	SJ111308

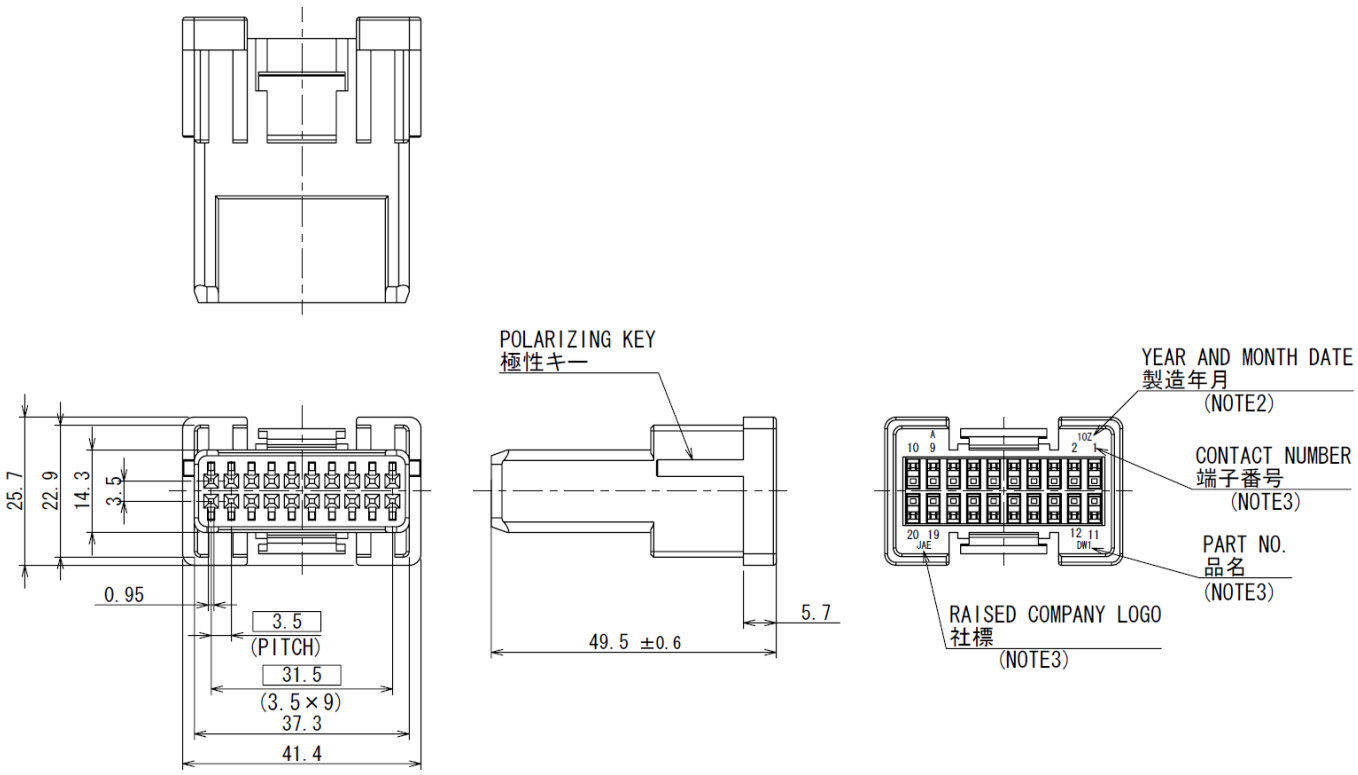

符号 NO.	名称 DESCRIPTION	個数 QTY.	材料 MATERIAL	仕上 FINISH	備考 REMARKS
1	RECEPTACLE HOUSING	1	GLASS FILLED PBT △2	COLOR:BROWN	—

符号 NO.	名称 DESCRIPTION	個数 QTY.	材料 MATERIAL	仕上 FINISH	備考 REMARKS
1	RECEPTACLE HOUSING	1	PBT	COLOR:BROWN	—

JAE PMK Div. Proprietary. Copyright © 2016, Japan Aviation Electronics Industry, Ltd.

4. Connector for Signal (Plug Side)

Part Number	DW1P020
SJ Drawing	SJ111309

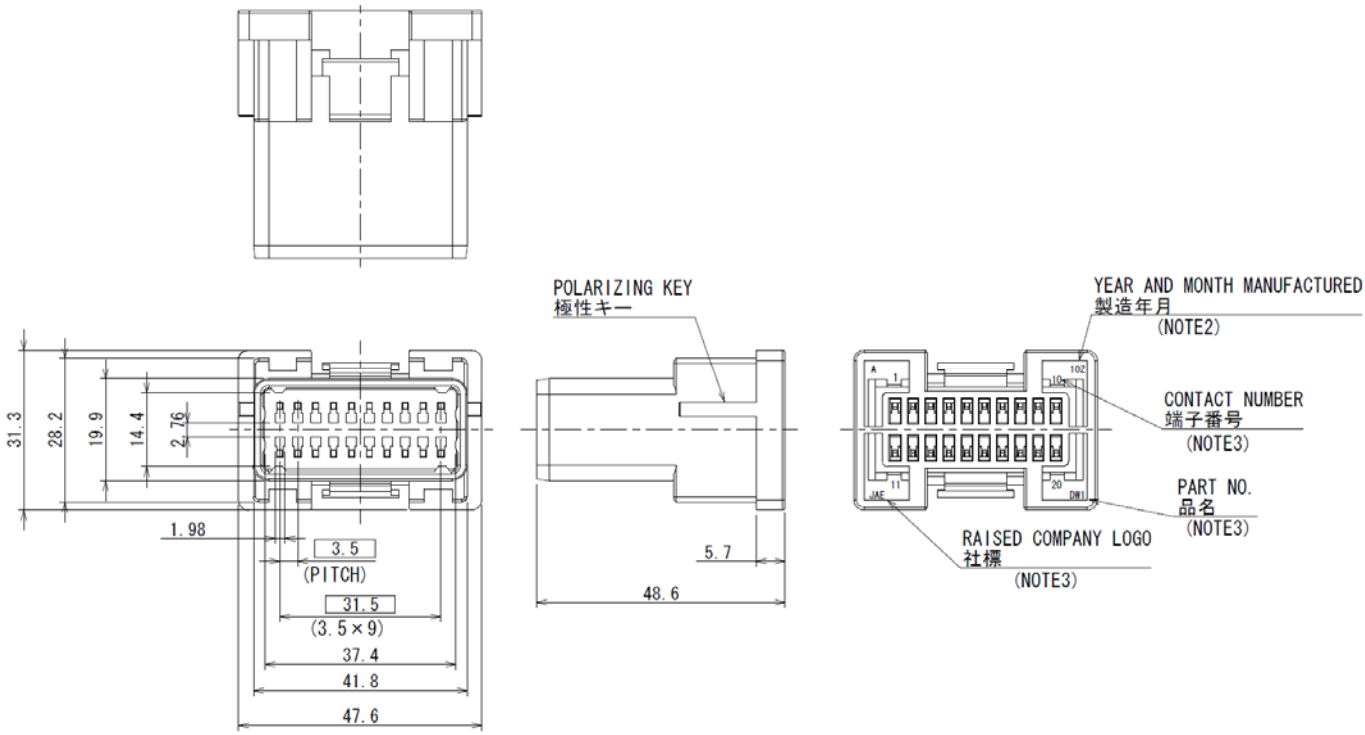

符号 NO.	名称 DESCRIPTION	個数 QTY.	材料 MATERIAL	仕上 FINISH	備考 REMARKS
1	PLUG HOUSING	1	GLASS FILLED PBT△2	COLOR:BROWN	UL94-V-0

JAE PMK Div. Proprietary. Copyright © 2016, Japan Aviation Electronics Industry, Ltd.

5. Shoulder Bolt for Panel Attachment

Part Number	D250-50632
SJ Drawing	SJ111543

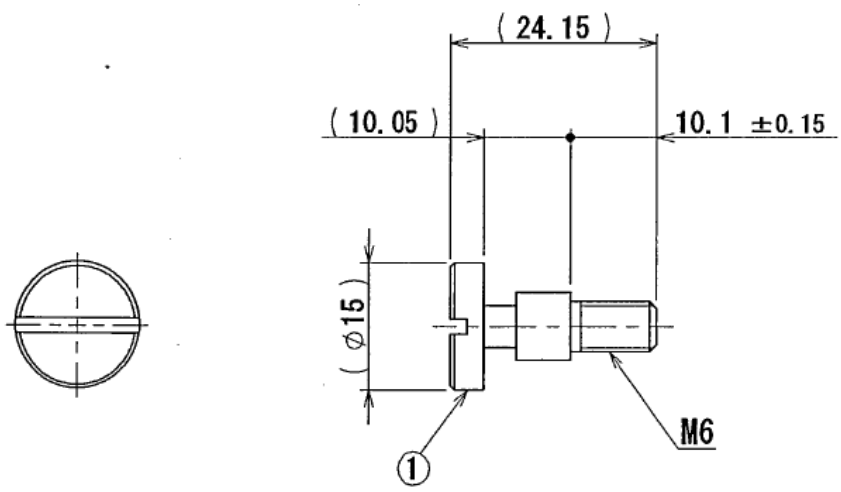

符号 NO.	名　　称 DESCRIPTION	個数 QTY.	材　　料 MATERIAL	仕　上 FINISH	備　　考 REMARKS
1	SHOULDER BOLT	1	STAINLESS STEEL	–	–

JAE PMK Div. Proprietary. Copyright © 2016, Japan Aviation Electronics Industry, Ltd.

6. Socket Contact for Signal (for Receptacle)

Part Number	DW1S04K4F1
SJ Drawing	SJ111310

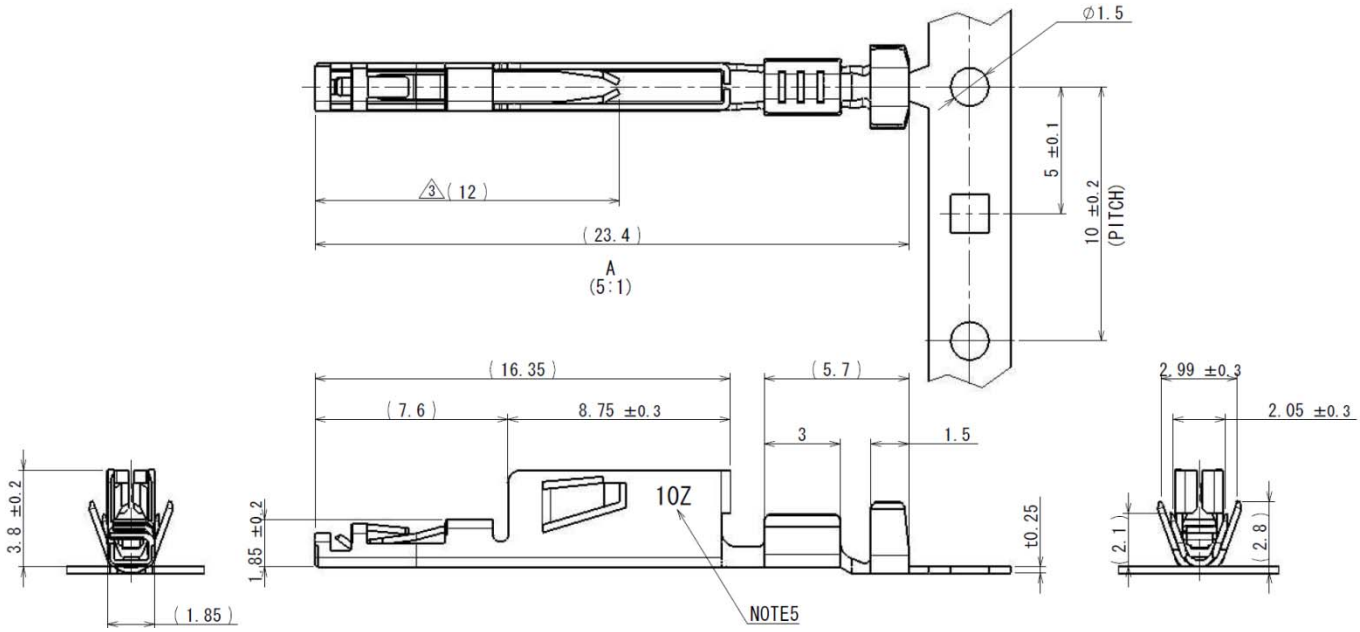

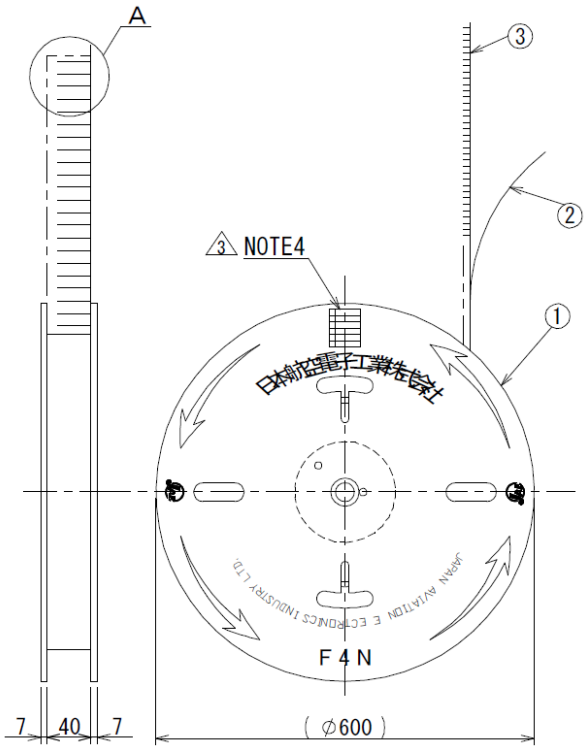

3	SOCKET CONTACT	4000	COPPER ALLOY	TIN PLATE	—
2	PAPER TAPE	1	PAPER	—	—
1	MAGAZINE	1	PAPER	—	—
符号 NO.	名　称 DESCRIPTION	個　数 QTY.	材　料 MATERIAL	仕　上 FINISH	備　考 REMARKS

JAE PMK Div. Proprietary. Copyright © 2016, Japan Aviation Electronics Industry, Ltd.

7. Pin Contact Long for Signal (for Plug)

Part Number	DW1P04K4F1
SJ Drawing	SJ111311

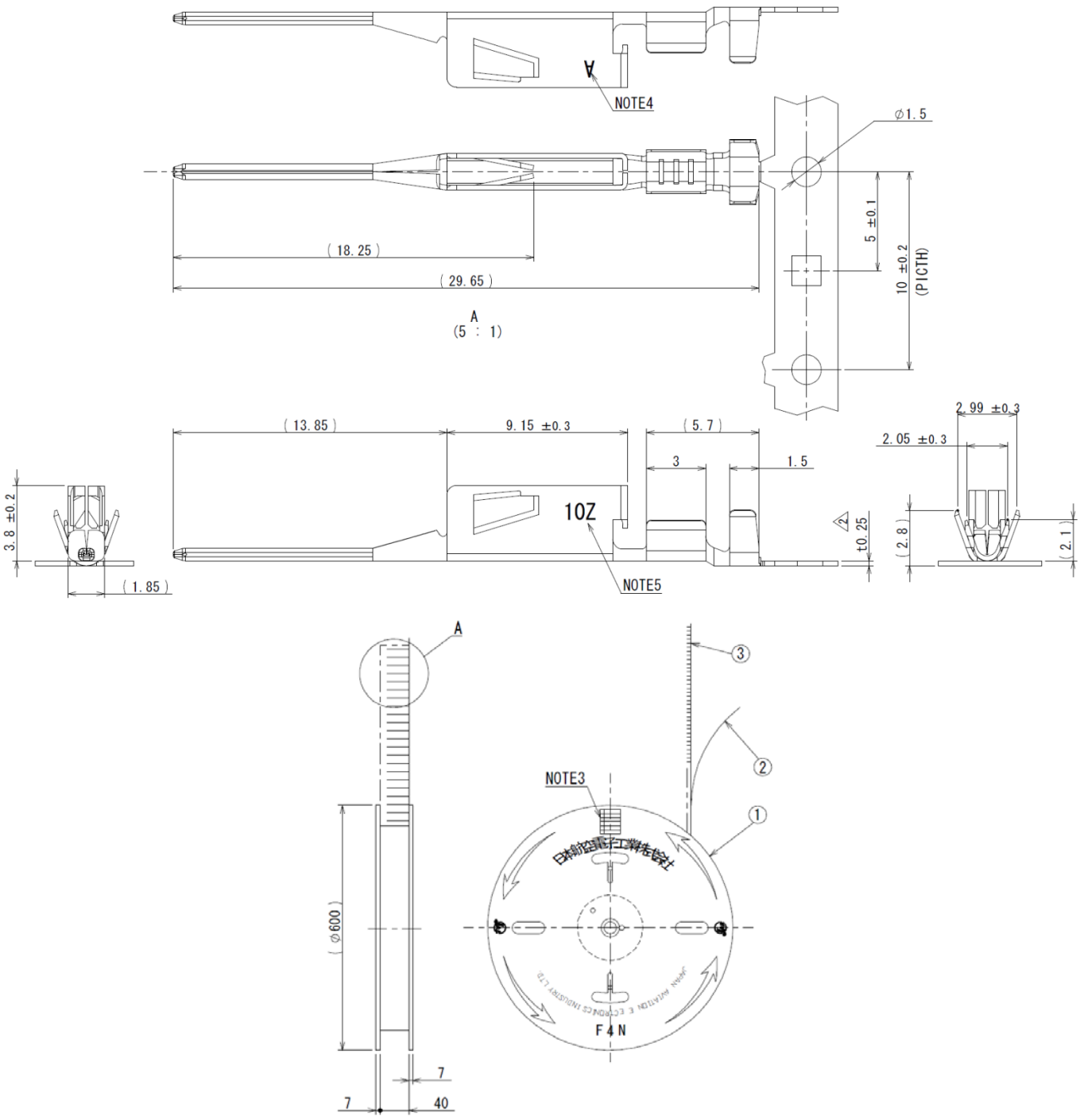

符号 NO.	名　称 DESCRIPTION	個　数 QTY.	材　料 MATERIAL	仕　上 FINISH	備　考 REMARKS
3	PIN CONTACT	4000	COPPER ALLOY	TIN PLATE	—
2	PAPER TAPE	1	PAPER	—	—
1	MAGAZINE	1	PAPER	—	—

JAE PMK Div. Proprietary. Copyright © 2016, Japan Aviation Electronics Industry, Ltd.

8. Pin Contact Short for Signal (for Plug)

Part Number	DW1P04K4F2
SJ Drawing	SJ111312

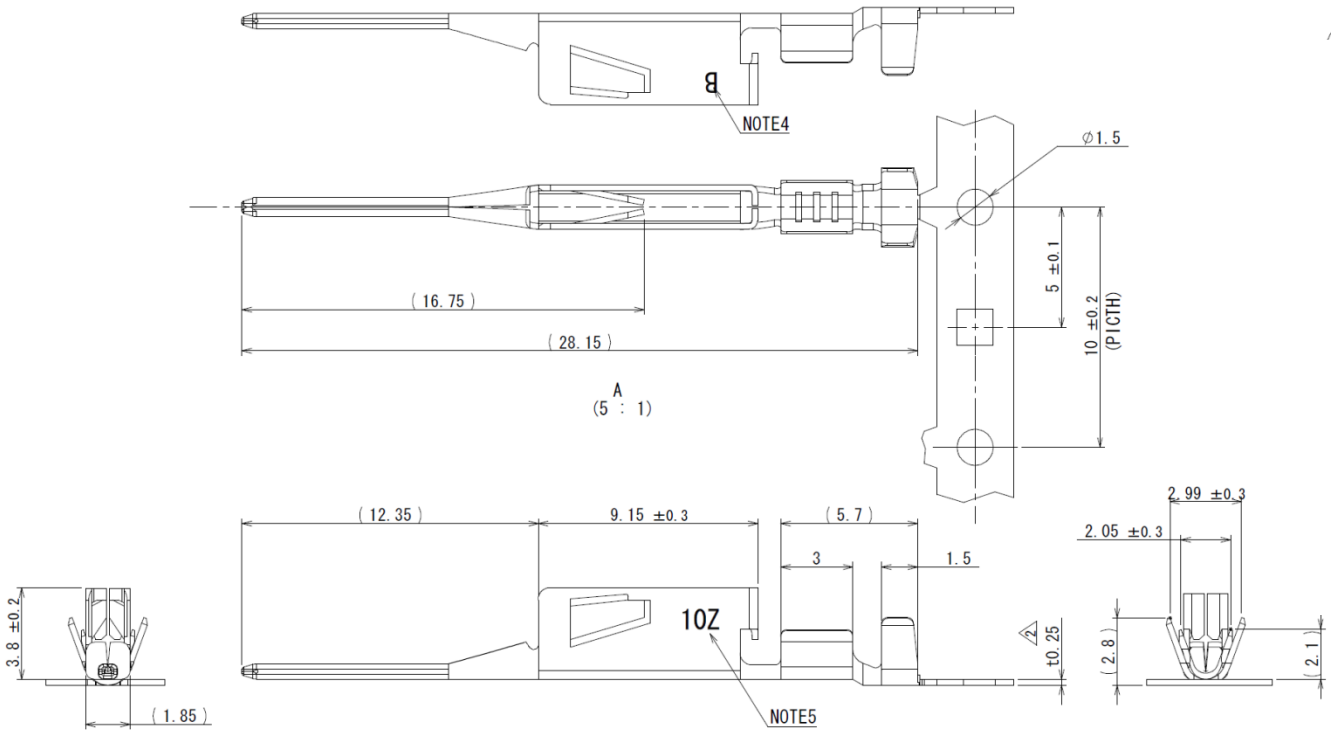

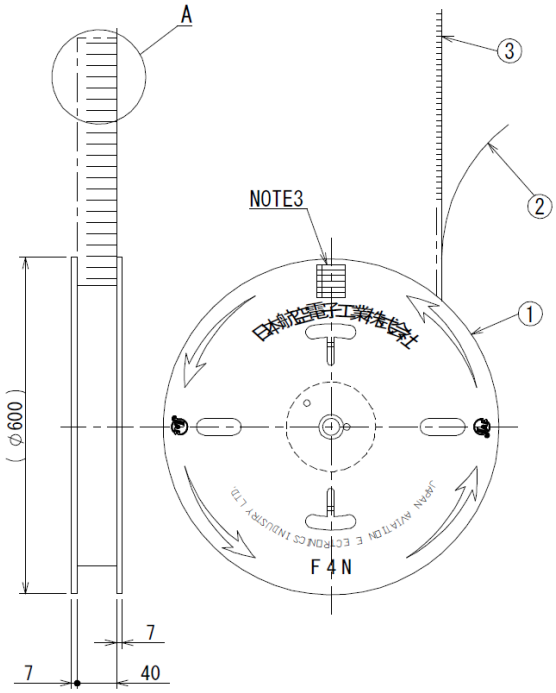

3	PIN CONTACT	4000	COPPER ALLOY	TIN PLATE	—
2	PAPER TAPE	1	PAPER	—	—
1	MAGAZINE	1	PAPER	—	—
符号 NO.	名　称 DESCRIPTION	個　数 QTY.	材　料 MATERIAL	仕　上 FINISH	備　考 REMARKS

JAE PMK Div. Proprietary. Copyright © 2016, Japan Aviation Electronics Industry, Ltd.

Applicable Board Dimensions (for reference)

Receptacle Side

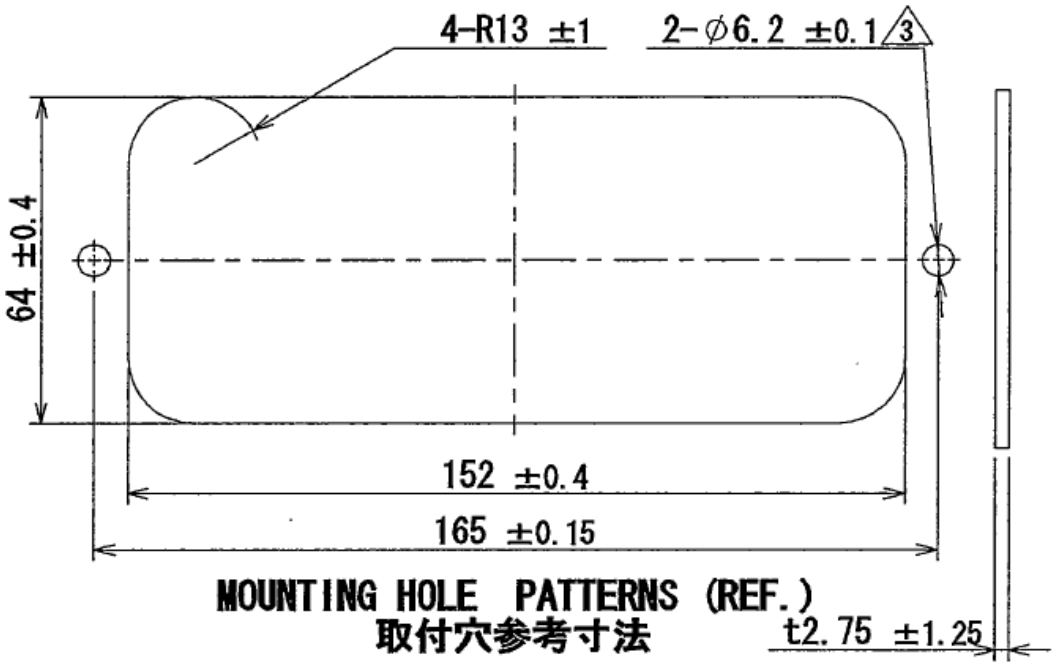

Plug Side

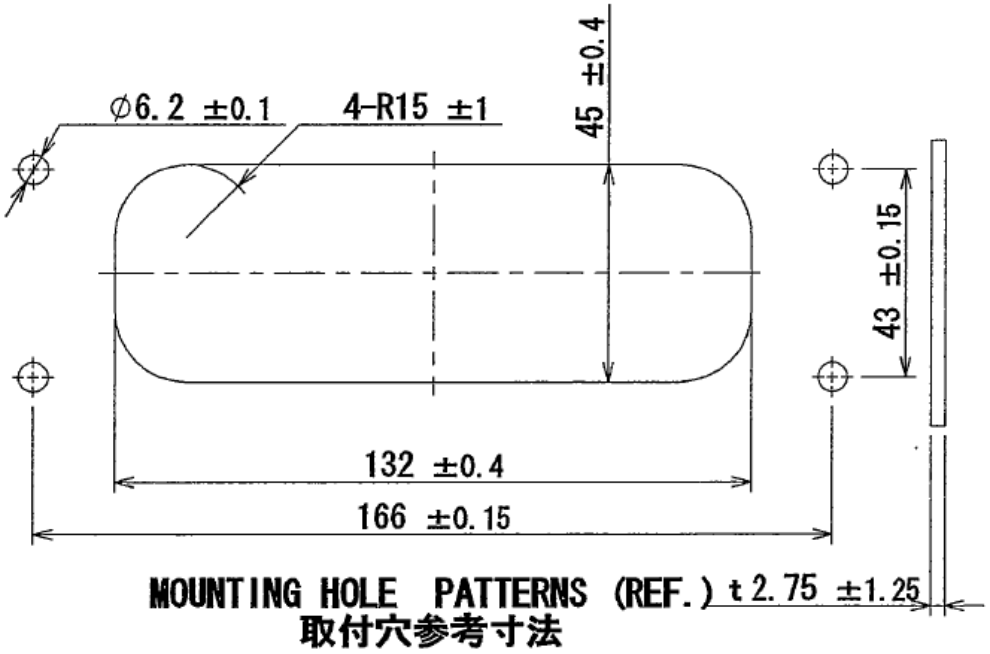

JAE PMK Div. Proprietary. Copyright © 2016, Japan Aviation Electronics Industry, Ltd.

DW1 Series

*Contact is Reel Part Number

Receptacle Side

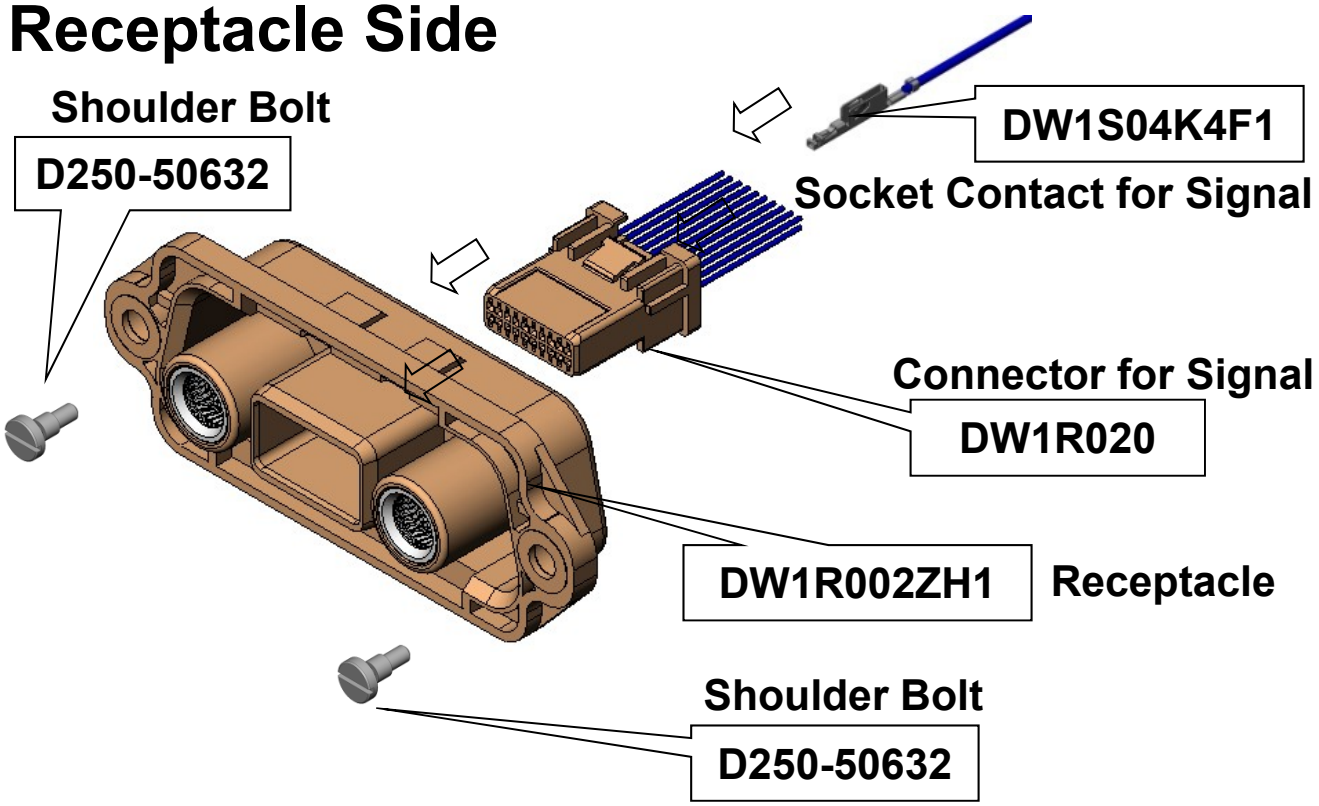

Plug Side

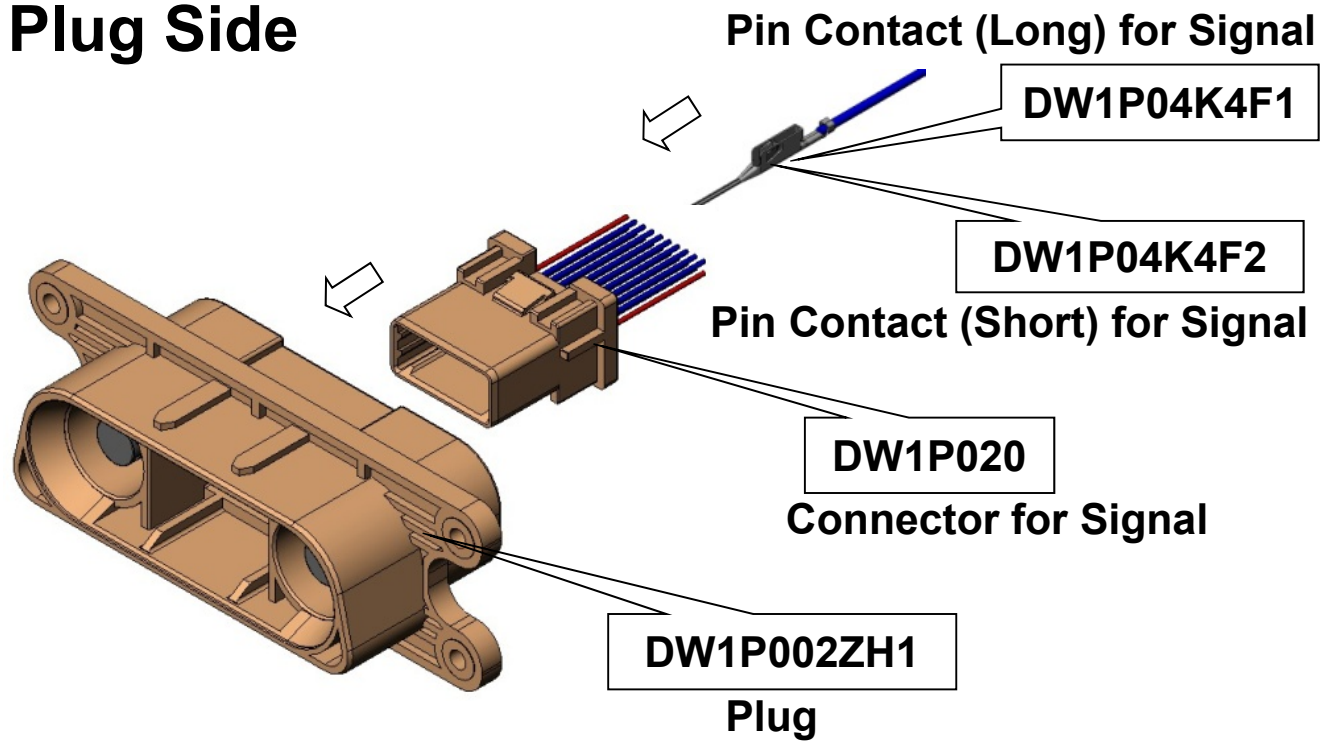

JAE PMK Div. Proprietary. Copyright © 2016, Japan Aviation Electronics Industry, Ltd.

Technical Documents

	Technical Document No. (Document Content)
Product Drawings	SJ111306 (DW1 Receptacle) SJ111307 (DW1 Plug) SJ111308 (DW1 Connector for Signal Receptacle Side) SJ111309 (DW1 Connector for Signal Plug Side) SJ111543 (Shoulder Bolt) SJ111310 (DW1 Socket Contact for Signal) SJ111311 (DW1 Pin Contact Long for Signal) SJ111312 (DW1 Pin Contact Short for Signal)
Specifications	JACS-30177
Handling Instructions	JAHL-30177
Crimp Applicator Handling Instructions	T703488 (for semi-automatic crimping machine) *Please contact us regarding automatic crimp tool.
Hand Crimp Tool Handling Instructions	T700315

Notice:

1. The values specified in this brochure are only for reference. The products and their specifications are subject to change without notice. Contact our sales staff for further information before considering or ordering any of our products.
For purchase, a product specification must be agreed upon.

2. Users are requested to provide protection circuits and redundancy circuits to ensure safety of the equipment, and sufficiently review the suitability of JAE's products to the equipment.

3. The products presented in this brochure are designed for the uses recommended below.
We strongly suggest you contact our sales staff when considering use of any of the products in any other way than the recommended applications or for a specific use that requires an extremely high reliability.

(1) Applications that require consultation:
(i) Please contact us if you are considering use involving a quality assurance program that you specify or that is peculiar to the industry, such as:
Automotive electrical components, train control, telecommunications devices (mainline), traffic light control, electric power, combustion control, fire prevention or security systems, disaster prevention equipment, etc.
(ii) We may separately give you our support with a quality assurance program that you specify, when you think of a use such as :
Aviation or space equipment, submarine repeaters, nuclear power control systems, medical equipment for life support, etc.

(2) Recommended applications include:
Computers, office appliances, telecommunications devices (terminals, mobile units), measuring equipment, audiovisual equipment, home electric appliances, factory automation equipment, etc.

Japan Aviation Electronics Industry, Limited
Product Marketing Division
Aobadai Building, 3-1-19, Aobadai, Meguro-ku, Tokyo 153-8539
Phone: +81-3-3780-2882 FAX: +81-3-3780-2946

* The specifications in this brochure are subject to change without notice. Please contact JAE for information.

JAE PMK Div. Proprietary. Copyright © 2016, Japan Aviation Electronics Industry, Ltd.