Product data sheet
Characteristics

DU322RB
Safety switch, general duty, non fusible, 60A, 3 poles, 15 hp, 240 VAC, NEMA 3R, bolt-on provision

Product availability : Stock - Normally stocked in distribution facility

Price* : 443.00 USD



Main

Product	Single Throw Safety Switch
Duty Rating	General duty
Device application	Residential
Disconnect Type	Non-fusible disconnect switch
Factory Installed Neutral	None
Phase	3 phase
Number of Poles	3
Current Rating	60 A
Voltage Rating	240 V AC
Enclosure Rating NEMA	NEMA 3R
Maximum Horse Power Rating	10 hp 240 V at AC 60 Hz for 1 phase conforming to NEC 430.52 15 hp 240 V at AC 60 Hz for 3 phase conforming to NEC 430.52

Complementary

Mounting Type	Surface
Electrical Connection	Lugs
Wiring configuration	3-wire
Wire Size	AWG 12...AWG 3 aluminium AWG 14...AWG 3 copper
Tightening torque	35 lbf.in (3.95 N.m) 0.00…0.01 in² (2.08…5.26 mm²) (AWG 14...AWG 10) 35 lbf.in (3.95 N.m) (AWG 14...AWG 10) 45 lbf.in (5.08 N.m) 0.01 in² (8.37 mm²) (AWG 8) 45 lbf.in (5.08 N.m) 0.02…0.03 in² (12.3…21.12 mm²) (AWG 6...AWG 4) 50 lbf.in (5.65 N.m) 0.04 in² (26.67 mm²) (AWG 3)
Depth	3.75 in (95.25 mm)

* Price is “List Price” and may be subject to a trade discount – check with your local distributor or retailer for actual price.

Disclaimer: This documentation is not intended as a substitute for and is not to be used for determining suitability or reliability of these products for specific user applications

Width	7.75 in (196.85 mm)
Height	9.63 in (244.60 mm)
Net Weight	26.01 lb(US) (11.8 kg)

Environment

Certifications	UL listed file E2875

Ordering and shipping details

Category	00106 - D & DU SW,NEMA3R, 30-200A
Discount Schedule	DE1A
GTIN	00785901491767
Nbr. of units in pkg.	1
Package weight(Lbs)	4.85 lb(US) (2.20 kg)
Returnability	Yes
Country of origin	MX

Packing Units

Unit Type of Package 1	PCE
Package 1 Height	5.30 in (13.462 cm)
Package 1 width	7.80 in (19.812 cm)
Package 1 Length	9.80 in (24.892 cm)
Unit Type of Package 2	CAR
Number of Units in Package 2	5
Package 2 Weight	25.70 lb(US) (11.657 kg)
Package 2 Height	10.70 in (27.178 cm)
Package 2 width	10.40 in (26.416 cm)
Package 2 Length	23.80 in (60.452 cm)
Unit Type of Package 3	PAL
Number of Units in Package 3	120
Package 3 Weight	660.00 lb(US) (299.371 kg)
Package 3 Height	36.00 in (91.44 cm)
Package 3 width	40.00 in (101.6 cm)
Package 3 Length	48.00 in (121.92 cm)

Offer Sustainability

Sustainable offer status	Green Premium product
California proposition 65	WARNING: This product can expose you to chemicals including: Lead and lead compounds, which is known to the State of California to cause cancer and birth defects or other reproductive harm. For more information go to www.P65Warnings.ca.gov
REACh Regulation	REACh Declaration
REACh free of SVHC	Yes
EU RoHS Directive	Compliant EU RoHS Declaration
Toxic heavy metal free	Yes
Mercury free	Yes
RoHS exemption information	Yes
China RoHS Regulation	China RoHS declaration Pro-active China RoHS declaration (out of China RoHS legal scope)
Environmental Disclosure	Product Environmental Profile
PVC free	Yes

Contractual warranty

Warranty	18 months

DU322RB

Approximate Dimensions

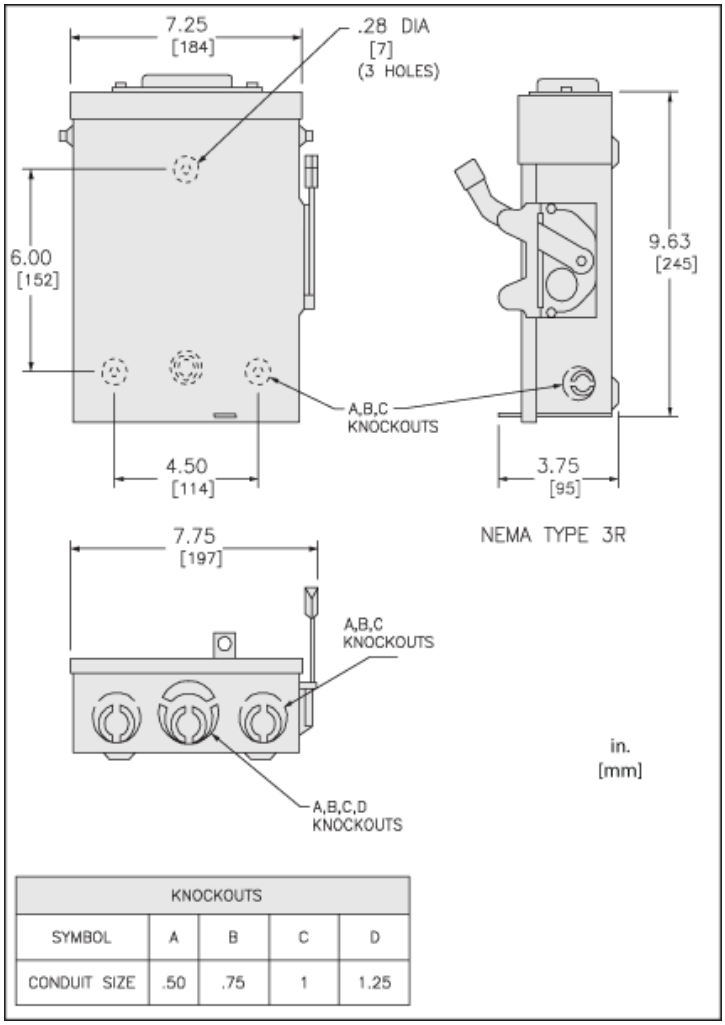

KNOCKOUTS				
SYMBOL	A	B	C	D
CONDUIT SIZE	.50	.75	1	1.25

Connections and Wiring Diagrams

