Micro Commercial Components

Micro Commercial Components
20736 Marilla Street Chatsworth
CA 91311
Phone: (818) 701-4933
Fax: (818) 701-4939

DTA114EUA

PNP
Digital Transistors

Features

- Lead Free Finish/RoHS Compliant ("P" Suffix designates RoHS Compliant. See ordering information)
- Epoxy meets UL 94 V-0 flammability rating
- Moisure Sensitivity Level 1
- Built-in bias resistors enable the configuration of an inverter circuit without connecting external input resistors
- The bias resistors consist of thin-film resistors with complete isolation to allow negative biasing of the input. They also have the advantage of almost completely eliminating parasitic effects.
- Only the on/off conditions need to be set for operation, making device design easy
- Halogen free available upon request by adding suffix "-HF"

Absolute maximum ratings @ 25℃

Symbol	Parameter	Min	Typ	Max	Unit
V_{CC}	Supply voltage	---	-50	---	V
V_{IN}	Input voltage	-40	---	10	V
I_O $I_{C(MAX)}$	Output current	---	-50 -100	---	mA
P_d	Power dissipation	---	200	---	mW
T_j	Junction temperature	---	150	---	℃
T_{stg}	Storage temperature	-55	---	150	℃

Electrical Characteristics @ 25℃

Symbol	Parameter	Min	Typ	Max	Unit
$V_{I(off)}$	Input voltage (V_{CC}=-5V, I_O=-100μA)	---	---	-0.5	V
$V_{I(on)}$	(V_O=-0.3V, I_O=-10mA)	-3.0	---	---	V
$V_{O(on)}$	Output voltage (I_O/I_I=-10mA/-0.5mA	---	---	-0.3	V
I_I	Input current (V_I=-5V)	---	---	-0.88	mA
$I_{O(off)}$	Output current (V_{CC}=-50V, V_I=0)	---	---	-0.5	μA
G_I	DC current gain (V_O=-5V, I_O=-5mA)	30	---	---	
R_1	Input resistance	7.0	10	13	KΩ
R_2/R_1	Resistance ratio	0.8	1.0	1.2	
f_T	Transition frequency (V_{CE}=-10V, I_E=5mA, f=100MHz)	---	250	---	MHz

●Equivalent circuit

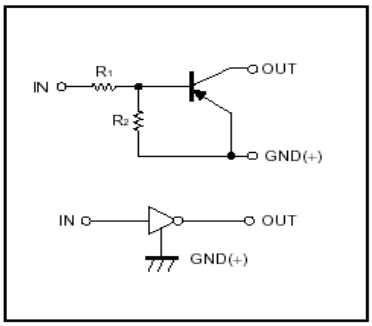

MARKING: 14

SOT-323

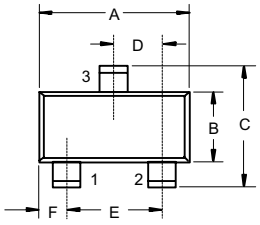

1: IN
2: GND
3: OUT

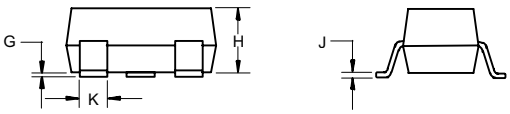

DIMENSIONS					
	INCHES		MM		
DIM	MIN	MAX	MIN	MAX	NOTE
A	.071	.087	1.80	2.20	
B	.045	.053	1.15	1.35	
C	.083	.096	2.10	2.45	
D	.026 Nominal		0.65Nominal		
E	.047	.055	1.20	1.40	
F	.012	.016	.30	.40	
G	.000	.004	.000	.100	
H	.035	.039	.90	1.00	
J	.004	.010	.100	.250	
K	.006	.016	.15	.40	

Suggested Solder Pad Layout

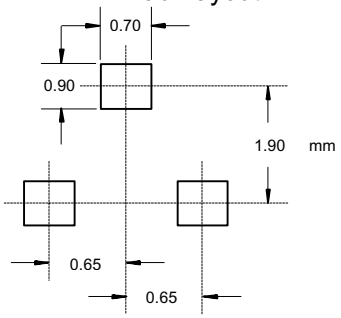

Micro Commercial Components

Ordering Information :

Device	Packing
Part Number-TP	Tape&Reel;3Kpcs/Reel

Note : Adding "-HF" suffix for halogen free, eg. Part Number-TP-HF

*****IMPORTANT NOTICE*****

Micro Commercial Components Corp. reserves the right to make changes without further notice to any product herein to make corrections, modifications , enhancements , improvements , or other changes . ***Micro Commercial Components Corp .*** does not assume any liability arising out of the application or use of any product described herein; neither does it convey any license under its patent rights ,nor the rights of others . The user of products in such applications shall assume all risks of such use and will agree to hold ***Micro Commercial Components Corp .*** and all the companies whose products are represented on our website, harmless against all damages.

*****LIFE SUPPORT*****

MCC's products are not authorized for use as critical components in life support devices or systems without the express written approval of Micro Commercial Components Corporation.

*****CUSTOMER AWARENESS*****

Counterfeiting of semiconductor parts is a growing problem in the industry. Micro Commercial Components (MCC) is taking strong measures to protect ourselves and our customers from the proliferation of counterfeit parts. MCC strongly encourages customers to purchase MCC parts either directly from MCC or from Authorized MCC Distributors who are listed by country on our web page cited below. Products customers buy either from MCC directly or from Authorized MCC Distributors are genuine parts, have full traceability, meet MCC's quality standards for handling and storage. **MCC will not provide any warranty coverage or other assistance for parts bought from Unauthorized Sources.** MCC is committed to combat this global problem and encourage our customers to do their part in stopping this practice by buying direct or from authorized distributors.