RoHS Compliant

Website: www.deltaww.com

No. 252 SHANG YING ROAD.
GUI SHAN INDUSTRIAL ZONE, 33341,TAO
YUAN COUNTLY, TAIWAN
Tel: 886-3-3591968
Fax: 886-3-3591991

SOLENOID PRODUCT SPECIFICATION

PART No.	VOLTAGE	DUTY CYCLE	POWER (W)	CURRENT (A)	DCR (Ω) *
DSTL-0216-24	24 VDC	100%	1.1	0.05	480
DSTL-0216-18	18 VDC	100%	1.1	0.06	285
DSTL-0216-12	12 VDC	100%	1.1	0.08	144
DSTL-0216-09	9 VDC	100%	1.1	0.12	76
DSTL-0216-05	5.4 VDC	100%	1.1	0.2	27

* OPERATION: POWER TO PULL, BUILT-IN RETURN SPRING.

* DCR VALUES ARE ±10% AT 25°C
* WEIGHT ARE 12 GRAM ±10%

1. MECHANICAL DIMENSIONS :

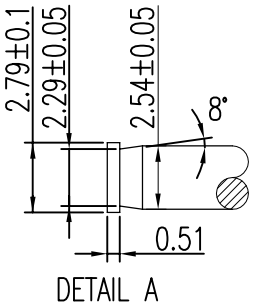

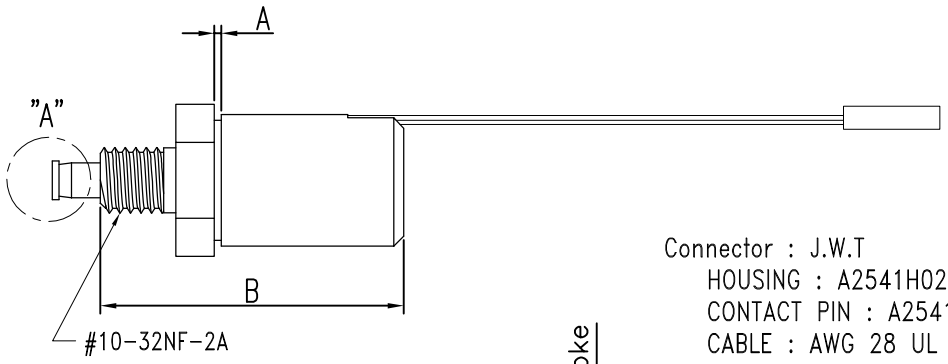

Connector : J.W.T
HOUSING : A2541H02-1*2P
CONTACT PIN : A2541T3B-0D
CABLE : AWG 28 UL 1571

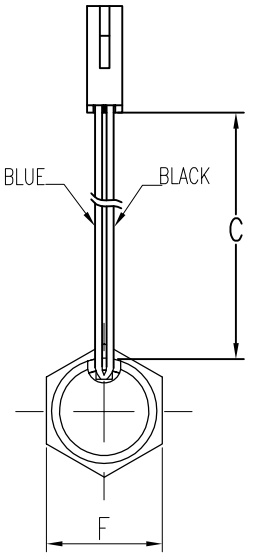

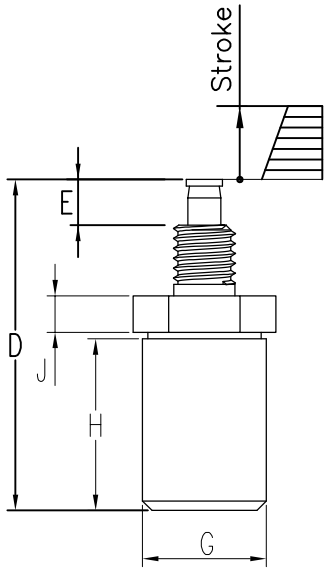

PLUNGER VERTICALLY UP

UNIT : mm.
A = 0.50 REF.
B = 21.84±0.18
C = 89.00±6.33
D = 24.54 MIN.
E = 2.72 MIN.
F = 9.53 REF.
G = 9.60±0.2
H = 13.2±0.2
J = 2.80±0.15

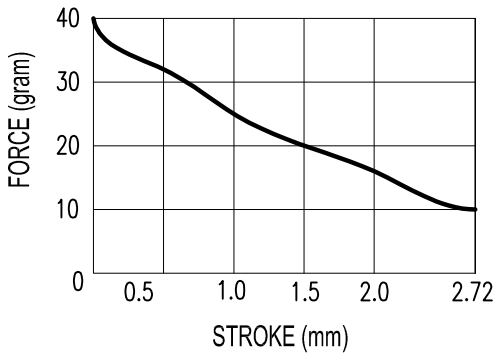

INSULATION MATERIALS: UL CONSTRUCTION, CLASS B 130°C
LIFE EXPECTANCY: 100K CYCLES OPERATIONS

LAYER TEST	IR. @500 Vdc.	HI-POT
(S-F) : 2KVp. MIN.	COIL TO CASE	@50/60Hz.,2mA
TEST ONLY COIL	100 MOHM MIN.	COIL TO CASE
		1000Vac.,60s