RoHS Compliant

Website: www.deltaww.com

No. 252 SHANG YING ROAD.
GUI SHAN INDUSTRIAL ZONE, 33341,TAO
YUAN COUNTLY, TAIWAN
Tel: 886-3-3591968
Fax: 886-3-3591991

SOLENOID PRODUCT SPECIFICATION

PART No.	VOLTAGE	DUTY CYCLE	POWER (W)	CURRENT (A)	DCR (Ω) *
DSMS-0730-24	24 VDC	2%, 45msec On	35	1.5	16
DSMS-0730-18	18 VDC	2%, 45msec On	34	1.92	9.4
DSMS-0730-12	12 VDC	2%, 45msec On	32	2.67	4.5
DSMS-0730-09	9 VDC	2%, 45msec On	30	3.35	2.7
DSMS-0730-05	5 VDC	2%, 45msec On	30	5.9	0.85

* OPERATION: POWER TO PUSH AND RELEASE, BUILT-IN RETURN SPRING.

* DCR VALUES ARE ±10% AT 25°C
* WEIGHT ARE 38 GRAMS ±10%

1. MECHANICAL DIMENSIONS :

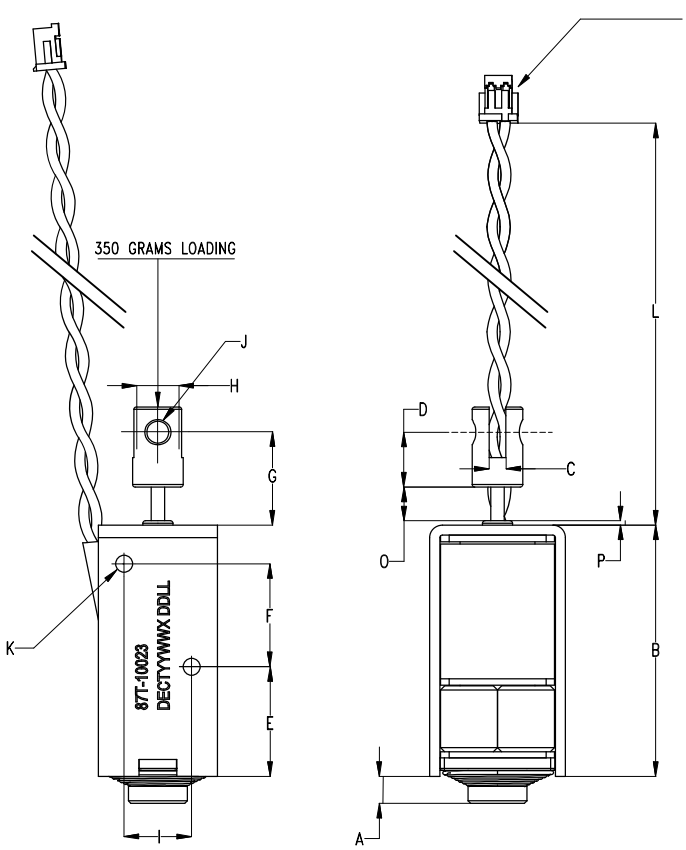

UNIT : mm.

A	=	3.40 ± 0.2
B	=	30.00 ± 0.25
C	=	2.00 ± 0.1
D	=	6.50 ± 0.1
E	=	13.20 ± 0.2
F	=	12.20 ± 0.2
G	=	10.5 ± 0.1
H	=	ø6.0 ± 0.1
I	=	8.00 ± 0.1
J	=	ø2.6 ± 0.1
K	=	4-M2.6x0.45
L	=	180 MIN.
M	=	14.00 ± 0.2
N	=	16.00 ± 0.2
O	=	3.50 ± 0.1
P	=	0.50 ± 0.1

UNLESS TOLERANCES.

X.X	=	±0.2
X.XX	=	±0.1
ANGLES	=	±1°

EXTENT POSITION.

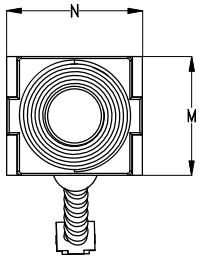

2. SCHEMATIC AND CONSTRUCTION :

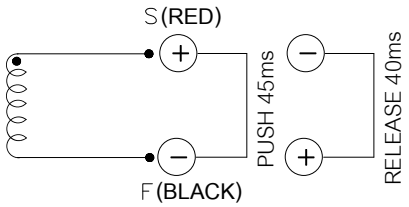

TEST CONDITION	FORCE TEST
0 Vdc.	450 GRAMS MIN. (MAGNET HOLDING WITHOUT SPRING)
NOMINAL VOLTAGE @25°C, 45±10ms PULSE WIDTH.	350 GRAMS MIN. (PLUNGER PULL-IN FORCE)
NOMINAL VOLTAGE @25°C, 40±5ms PULSE WIDTH.	350 GRAMS LOADING (DURING PLUNGER RELEASE)

*** NOMINAL OPERATION DUTY CYCLE: POWER ON 40ms / OFF 2 SEC**

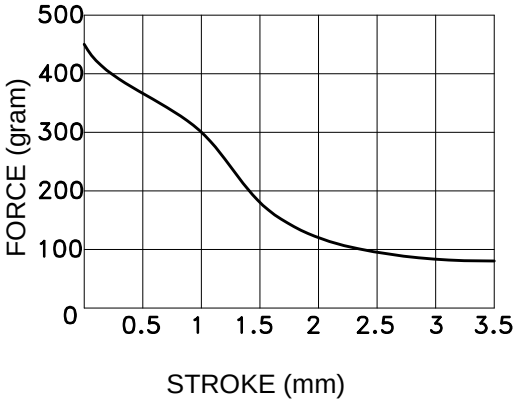

INSULATION MATERIALS: UL CONSTRUCTION, CLASS B 130°C
LIFE EXPECTANCY: 100K CYCLES OPERATIONS

LAYER TEST	IR. @500 Vdc.	HI-POT
(S-F) 500Vp. MIN.	COIL TO FRAME	@50/60Hz.,2mA
TEST ONLY COIL	50 MOHM MIN.	COIL TO FRAME
		1200Vac.,1s