Fast Recovery Epitaxial Diode (FRED)

I_{FAVM} = 2x165 A
V_{RRM} = 200 V
t_{rr} = 35 ns

ECO-PAC 2

Preliminary Data Sheet

V_{RSM} V	V_{RRM} V	Typ
200	200	DSEI 2x161-02P

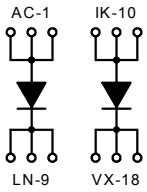



Symbol	Conditions		Maximum Ratings	
I_{FRMS}	$T_{VJ} = T_{VJM}$		270	A
I_{FAVM} *	T_C = 70°C; rectangular; d = 0.5		165	A
I_{FSM}	T_{VJ} = 45°C; V_R = 0 V;	t = 10 ms (50 Hz), sine	1200	A
		t = 8.3 ms (60 Hz), sine	1300	A
	T_{VJ} = 125°C; V_R = 0 V;	t = 10 ms (50 Hz), sine	1080	A
		t = 8.3 ms (60 Hz), sine	1170	A
I^2dt	T_{VJ} = 45°C; V_R = 0 V;	t = 10 ms (50 Hz), sine	7200	A^2s
		t = 8.3 ms (60 Hz), sine	7100	A^2s
	T_{VJ} = 125°C; V_R = 0 V;	t = 10 ms (50 Hz), sine	5800	A^2s
		t = 8.3 ms (60 Hz), sine	700	A^2s
T_{VJ}			-40 ... + 150	°C
T_{VJM}			150	°C
T_{stg}			-40 ... + 125	°C
V_{ISOL}	50/60 Hz, RMS	t = 1 min	2500	V ~
	I_{ISOL} ≤ 1 mA	t = 1 s	3600	V ~
M_d	Mounting torque	(M4)	1.5-2.0	Nm
			14-18	lb.in.
Weight	typ.		20	g

Symbol	Conditions	Characteristic Values min.	typ.	max.	
I_R	T_{VJ} = 25°C; $V_R = V_{RRM}$			3	mA
	T_{VJ} = 25°C; $V_R = 0.8 \cdot V_{RRM}$			2	mA
	T_{VJ} = 125°C; $V_R = 0.8 \cdot V_{RRM}$			80	mA
V_F	I_T = 200 A; T_{VJ} = 25°C			1.2	V
V_{TO}	For power-loss calculations only			0.53	V
r_T				2.6	mΩ
R_{thJC}	per Diode			0.29	K/W
R_{thCH}	per Diode		0.2		K/W
I_{RM}	I_F = 100 A; $-di_F/dt$ = 200 A/µs; V_R = 100 V		20		A
	L ≤ 0.05 mH; T_{VJ} = 100°C				
t_{rr}	I_F = 1 A; $-di_F/dt$ = 400 A/µs;				
	V_R = 30 V; T_{VJ} = 25°C		35		ns
d_S	Creeping distance on surface	11.2			mm
d_A	Creeping distance in air	11.2			mm
a	Max. allowable acceleration			50	m/s^2

* I_{FAVM} rating includes reverse blocking losses at T_{VJM}; V_R = 0.8 V_{RRM}; d = 0.5

IXYS reserves the right to change limits, test conditions and dimensions.

Features

- 2 indpendent FRED in 1 package
- Isolation voltage 3600 V~
- Planar glass passivated chips
- Low forward voltage drop
- Leads suitable for PC board soldering
- Very short recovery time
- Soft recovery behaviour

Applications

- Antiparallel diode for high frequency switching devices
- Anti saturation diode
- Snubber diode
- Free wheeling diode in converters and motor control circuits
- Rectifiers in switch mode power supplies (SMPS)
- Inductive heating and melting
- Uninterruptible power supplies (UPS)
- Ultrasonic cleaners and welders

Advantages

- Easy to mount with two screws
- Space and weight savings
- Improved temperature and power cycling
- Low noise switching
- Small and light weight

Dimensions in mm (1 mm = 0,0394")

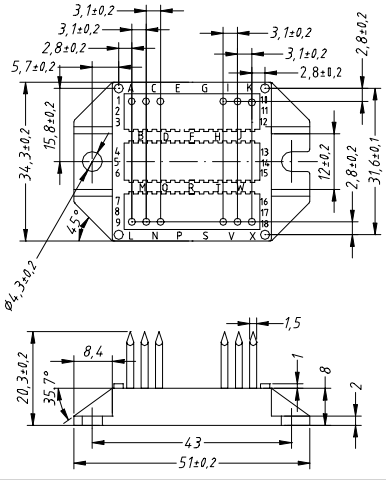

© 2001 IXYS All rights reserved