DSC511-03



Crystal-less Two Output Clock Generator

General Description

The DSC511-03 is a crystal-less, two output clock generator. The clock generator uses proven silicon MEMS technology to provide excellent jitter and stability over a wide range of supply voltages and temperatures. By eliminating the external quartz crystal, MEMS clock generators significantly enhance reliability and accelerate product development, while meeting stringent clock performance criteria for a variety of communications, storage, and networking applications.

DSC511-03 has a Output Enable / Disable feature allowing it to disable the outputs when OE is low. The device is available in a space saving 6 pin 2.5 x 2.0 mm QFN package.

Block Diagram

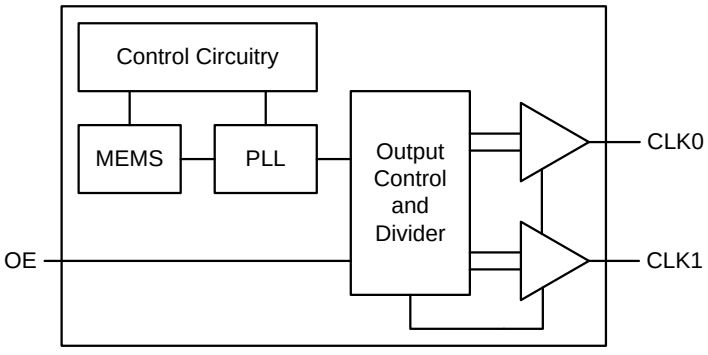

Features

- **Low RMS Phase Jitter: <1 ps (typ)**
- **High Stability: ±10, ±25, ±50 ppm**
- **Wide Temperature Range**
  - Automotive: -55° to 125° C
  - Ext. Industrial: -40° to 105° C
  - Industrial: -40° to 85° C
  - Ext. commercial: -20° to 70° C
- **High Supply Noise Rejection: -50 dBc**
- **Two Independent CMOS Outputs**
- **Short Lead Times: 2 Weeks**
- **Wide Freq. Range:**
  - CMOS Output: 2.3 to 170 MHz
- **Miniature Footprint of 2.5 x 2.0 mm**
- **Excellent Shock & Vibration Immunity**
  - Qualified to MIL-STD-883
- **High Reliability**
  - 20x better MTF than quartz oscillators
- **Supply Range of 2.25 to 3.6 V**
- **Lead Free & RoHS Compliant**

Applications

- **Consumer Electronics**
- **Solid State Storage**
- **Storage Area Networks**
- **Passive Optical Networks**
  - EPON, 10G-EPON, GPON, 10G-PON
- **Ethernet**
  - 1G, 10GBASE-T/KR/LR/SR, and FCoE
- **HD/SD/SDI Video & Surveillance**
- **Industrial and Medical**

Specifications (Unless specified otherwise: T=25° C, VDD =3.3V)

Parameter		Condition	Min.	Typ.	Max.	Unit
Supply Voltage[1]	V_{DD}		2.25		3.6	V
Supply Current	I_{DD}	EN pin low – outputs are disabled		21	23	mA
Supply Current[2]	I_{DD}	EN pin high – outputs are enabled C_L=15pF, F_{O1}=F_{O2}=125 MHz		32		mA
Frequency Stability	Δf	Includes frequency variations due to initial tolerance, temp. and power supply voltage			±10 ±25 ±50	ppm
Aging	Δf	1 year @25°C			±5	ppm
Startup Time[3]	t_{SU}	T=25°C			5	ms
Input Logic Levels Input logic high Input logic low	 V_{IH} V_{IL}		 0.75xV_{DD} -		 - 0.25xV_{DD}	V
Output Disable Time[4]	t_{DA}				5	ns
Output Enable Time	t_{EN}				20	ns
Pull-Up Resistor[2]		Pull-up exists on all digital IO		40		kΩ
Output Logic Levels Output logic high Output logic low	 V_{OH} V_{OL}	I=±6mA	 0.9xV_{DD} -		 - 0.1xV_{DD}	V
Output Transition time[4] Rise Time Fall Time	 t_R t_F	20% to 80% C_L=15pf		 1.1 1.4	 2 2	ns
Frequency	f_0	Commercial/Industrial temp range Automotive temp range	2.3		170 100	MHz
Output Duty Cycle	SYM		45		55	%
Period Jitter[5]	J_{PER}	F_{O1}=F_{O2}=125 MHz		3		ps_{RMS}
Integrated Phase Noise	J_{CC}	200kHz to 20MHz @ 125MHz 100kHz to 20MHz @ 125MHz 12kHz to 20MHz @ 125MHz		0.3 0.38 1.7	 2	ps_{RMS}

Notes:
1. Pin 4 V_{DD} should be filtered with 0.01uf capacitor.
2. Output is enabled if Enable pad is floated or not connected.
3. t_{su} is time to 100PPM stable output frequency after V_{DD} is applied and outputs are enabled.
4. Output Waveform and Test Circuit figures below define the parameters.
5. Period Jitter includes crosstalk from adjacent output.

Absolute Maximum Ratings

Item	Min	Max	Unit	Condition
Supply Voltage	-0.3	+4.0	V	
Input Voltage	-0.3	V_{DD}+0.3	V	
Junction Temp	-	+150	°C	
Storage Temp	-55	+150	°C	
Soldering Temp	-	+260	°C	40sec max.
ESD HBM MM CDM	-	 4000 400 1500	V	

Solder Reflow Profile

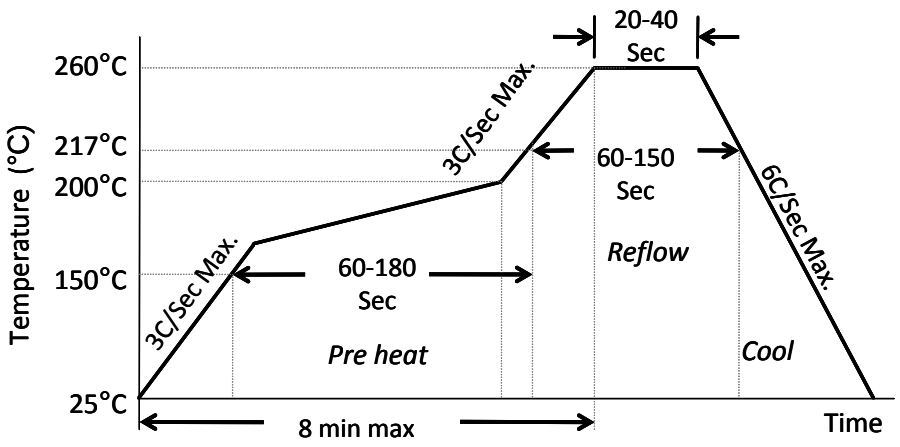

6 QFN MSL 1 @ 260°C refer to JSTD-020C	
Ramp-Up Rate (200°C to Peak Temp)	3°C/Sec Max.
Preheat Time 150°C to 200°C	60-180 Sec
Time maintained above 217°C	60-150 Sec
Peak Temperature	255-260°C
Time within 5°C of actual Peak	20-40 Sec
Ramp-Down Rate	6°C/Sec Max.
Time 25°C to Peak Temperature	8 min Max.

OE Function and Output Waveform: LVCMOS

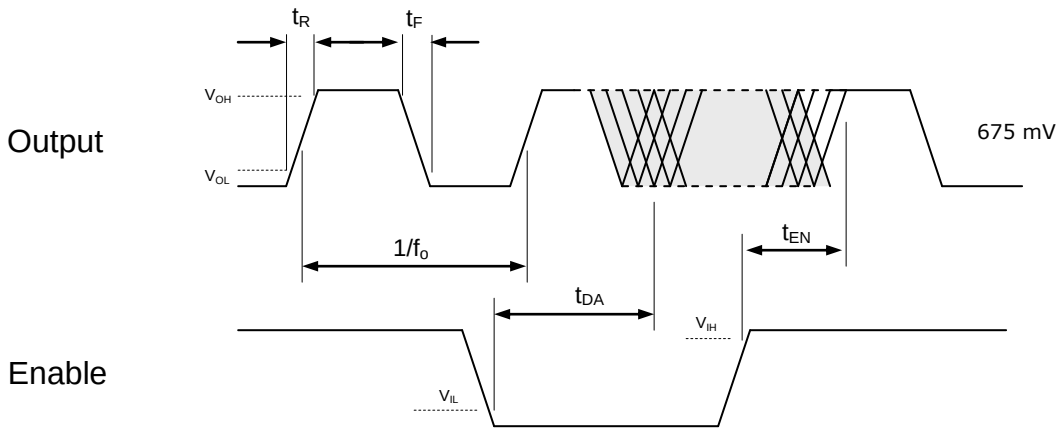

Ordering Information

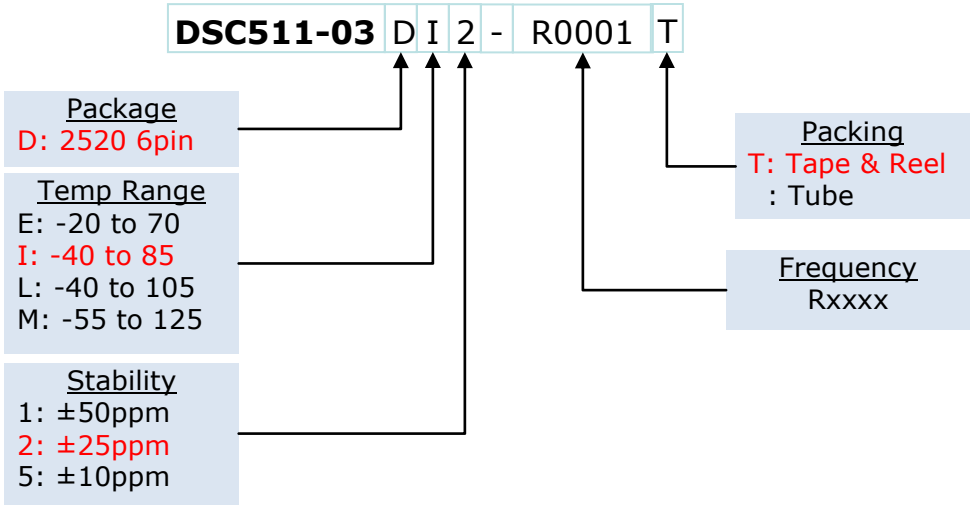

Output Clock Frequencies

Table 2 lists the standard default frequency configurations and the associated ordering information to be used in conjunction with the ordering code. Customer defined combinations are available.

Table 2. Pre-programmed output frequency pairs

Ordering Info	CLK 1 (MHz)	CLK 2 (MHz)
R0001	25.0000	25.0000
RXXXX	-	-

Package Dimensions

EXTERNAL DIMENSIONS
Units: mm [inches]

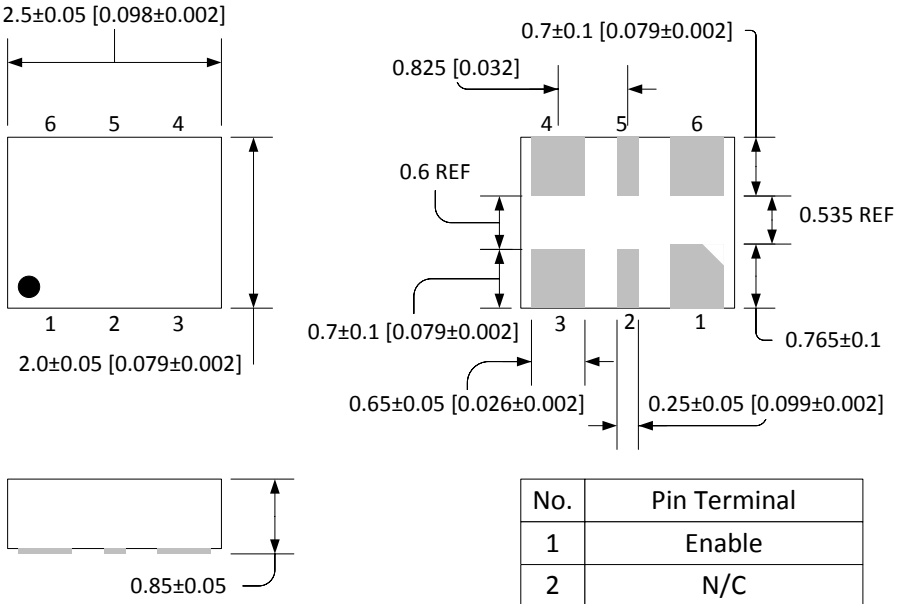

No.	Pin Terminal
1	Enable
2	N/C
3	Ground
4	CLK0
5	CLK1
6	VDD

RECOMMENDED SOLDER PAD LAYOUT
Units: mm [inches]

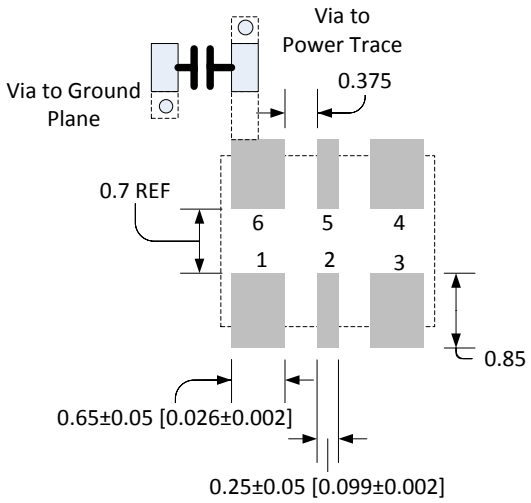

Disclaimer:

Micrel makes no representations or warranties with respect to the accuracy or completeness of the information furnished in this data sheet. This information is not intended as a warranty and Micrel does not assume responsibility for its use. Micrel reserves the right to change circuitry, specifications and descriptions at any time without notice. No license, whether express, implied, arising by estoppel or otherwise, to any intellectual property rights is granted by this document. Except as provided in Micrel's terms and conditions of sale for such products, Micrel assumes no liability whatsoever, and Micrel disclaims any express or implied warranty relating to the sale and/or use of Micrel products including liability or warranties relating to fitness for a particular purpose, merchantability, or infringement of any patent, copyright or other intellectual property right.

Micrel Products are not designed or authorized for use as components in life support appliances, devices or systems where malfunction of a product can reasonably be expected to result in personal injury. Life support devices or systems are devices or systems that (a) are intended for surgical implant into the body or (b) support or sustain life, and whose failure to perform can be reasonably expected to result in a significant injury to the user. A Purchaser's use or sale of Micrel Products for use in life support appliances, devices or systems is a Purchaser's own risk and Purchaser agrees to fully indemnify Micrel for any damages resulting from such use or sale.

MICREL, Inc. • **2180 Fortune Drive,** **San Jose, California 95131** • **USA**
Phone: +1 (408) 944-0800 • **Fax: +1 (408) 474-1000** • **Email: hbwhelp@micrel.com** • **www.micrel.com**