# DSC2311KI2-R0058

**Crystal-less™ Configurable Clock Generator**

## General Description

DSC2311KI2-R0058 is a crystal-less clock generator that is factory configurable to simultaneously output two separate frequencies from 2.3 to 170MHz. The clock generator uses proven silicon MEMS technology to provide low jitter and high frequency stability across a wide range of supply voltages and temperatures. By eliminating the external quartz crystal, crystal-less clock generators significantly enhance reliability and accelerate product development, while meeting stringent clock performance criteria for a variety of consumer electronics, communications, and storage applications.

DSC2311KI2-R0058 has an output enable/disable feature allowing it to disable the outputs when OE is low. The device is available in a space-saving 6-pin 2.5mm x 2.0mm TDFN package that needs only a single external bypass capacitor. This requires a PCB footprint equivalent to that of a 1.0mm x 1.0mm crystal-based clock generator.

## Features

- Two simultaneous LVCMOS outputs:
  - 12MHz
  - 50MHz
- Low RMS phase jitter: <1ps (typical)
- ±25ppm frequency stability
- -40°C to +85°C industrial temperature range
- High supply noise rejection: -50dBc
- High shock & vibration immunity
  - Qualified to MIL-STD-883
- High reliability
  - 20x higher MTBF than crystal-based clock generator designs
- Programmable output strength for EMI reduction and signal integrity optimization
- Supply range of 2.25 to 3.6V
- AEC-Q100 automotive qualified
- 6-pin 2.5mm x 2.0mm TDFN package

## Applications

- Consumer Electronics
- Camera and Imaging Modules
- Home Automation
- Industrial and Power Conversion
- Mobile Communications, Internet, and Sensor Devices
- Solid State, Hard Drive, and Flash Drive Storage
- Automotive

## Block Diagram

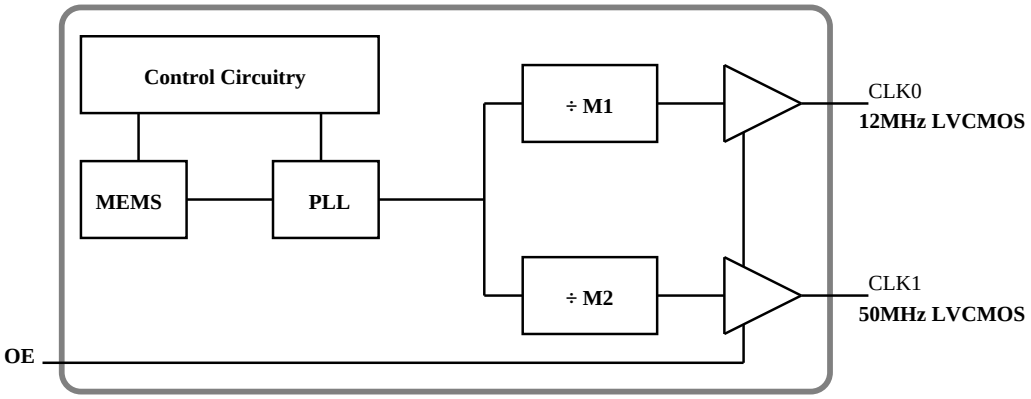


ClockWorks is a registered trademark of Microchip Technology Inc.

## Ordering Information

| Ordering Part Number | Industrial Temperature Range | Shipping | Package |
|---|---|---|---|
| DSC2311KI2-R0058 | -40°C to +85°C | Tube | 6-pin 2.5mm x 2.0mm TDFN |
| DSC2311KI2-R0058T | -40°C to +85°C | Tape and Reel | 6-pin 2.5mm x 2.0mm TDFN |

Devices are Green and RoHS compliant. Sample material may have only a partial top mark.

## Pin Configuration

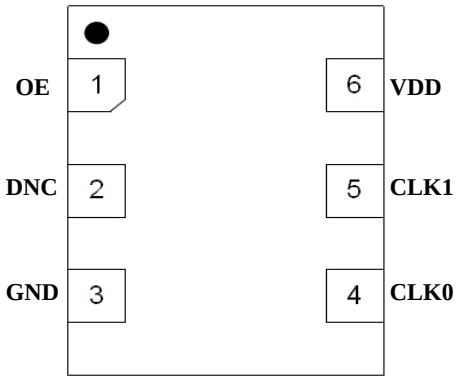


**6-pin 2.5mm x 2.0mm TDFN**

## Pin Description

| Pin Number | Pin Name | Pin Type | Pin Level | Pin Function |
|---|---|---|---|---|
| 1 | OE | I | | Active high output enable for CLK0 and CLK1 |
| 2 | DNC | | | Leave unconnected or connect to the ground |
| 3 | GND | PWR | | Power supply ground |
| 4 | CLK0 | O | LVCMOS | CLK0 output frequency = 12MHz |
| 5 | CLK1 | O | LVCMOS | CLK1 output frequency = 50MHz |
| 6 | VDD | PWR | | Power supply |

## Specifications (Unless specified otherwise: T = 25°C, VDD = 3.3V)

| Parameter | Symbol | Condition | Min. | Typ. | Max. | Units |
|---|---|---|---|---|---|---|
| Supply Voltage[1] | VDD | | 2.25 | | 3.6 | V |
| Supply Current[2] | IDD | OE pin low - outputs are disabled | | 21 | 23 | mA |
| Frequency Stability[6] | ΔF | Includes frequency variation due to initial tolerance, temp. and power supply voltage | | ±25 | | ppm |
| Aging | ΔF | First year (@ 25°C) | | | ±5 | ppm |
| Startup Time[3] | tSU | T = 25°C | | | 5 | ms |
| Input Logic High<br>Input Logic Low | VIH<br>VIL | | 0.75 x VDD<br>- | | -<br>0.25 x VDD | V |
| Output Disable Time[4] | tDA | | | | 5 | ns |
| Output Enable Time[4] | tEN | | | | 20 | ns |
| Pull-Up Resistor[2] | | Pull-up exists on pin 1 | | 40 | | kOhms |
| Output Logic High<br>Output Logic Low | VOH<br>VOL | I = ±6mA | 0.9 x VDD<br>- | | -<br>0.1 x VDD | V |
| Output Transition Time[4]<br>Rise Time<br>Fall Time | <br>tR<br>tF | <br>20% to 80%<br>CL = 15pF | | <br>1.1<br>1.43 | <br>2<br>2 | ns |
| Frequency | F0<br>F1 | CLK0<br>CLK1 | | 12<br>50 | | MHz |
| Output Duty Cycle | SYM | | 45 | | 55 | % |
| Period Jitter[5] | JPER | CLK0 = CLK1 = 25MHz | | 3 | | psRMS |
| Integrated Phase Noise | JCC | 200kHz to 20MHz @ 25MHz<br>100kHz to 20MHz @ 25MHz<br>12kHz to 20MHz @ 25MHz | | 0.3<br>0.38<br>1.7 | <br><br>2 | psRMS |

**Notes:**
1. Pin 4 VDD should be filtered with 0.1uF capacitor.
2. Output is enabled if OE pad is high or not connected. Supply current = Disabled Current + ΔIDD from CLK0 + ΔIDD from CLK1. See Current Consumption graph on next page.
3. tSU is time to stable output frequency after VDD is applied and outputs are enabled.
4. See Figure 3 for detail (all based on maximum drive settings).
5. Period Jitter includes crosstalk from adjacent output.
6. For other ppm stabilities, contact the factory at MEMS_Support@microchip.com.

## Absolute Maximum Ratings

| Item | Min. | Max. | Units | Condition |
|---|---|---|---|---|
| Supply Voltage | -0.3 | +4.0 | V | |
| Input Voltage | -0.3 | VDD + 0.3 | V | |
| Junction Temp | - | +150 | °C | |
| Storage Temp | -55 | +150 | °C | |
| Soldering Temp | - | +260 | °C | 40sec max. |
| ESD<br>HBM<br>MM<br>CDM | - | <br>4000<br>400<br>1500 | V | |

## Current Consumption

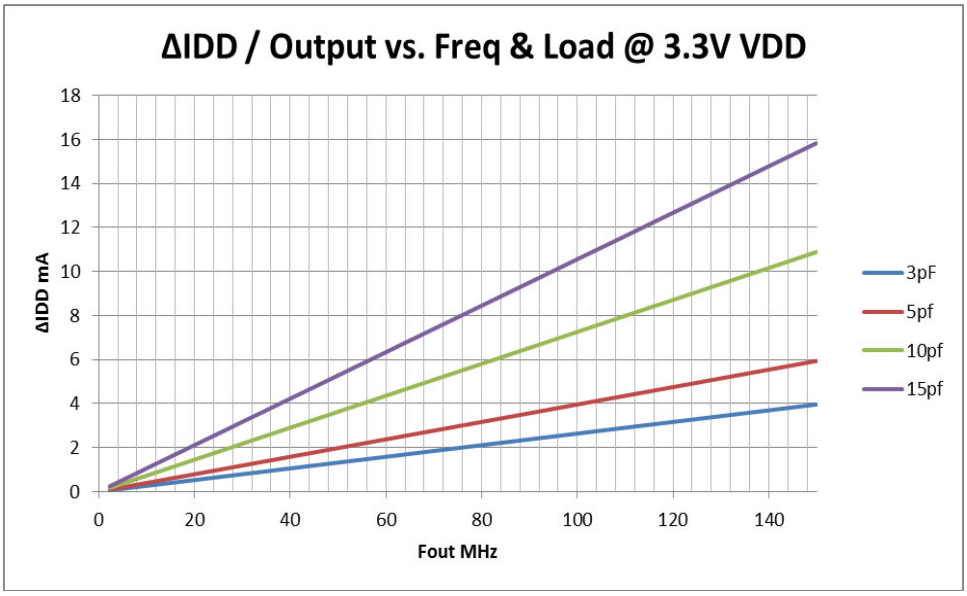


**Figure 1. Total Current = Disabled Current + ΔIDD Fout1 + ΔIDD Fout2**

## Solder Reflow Profile

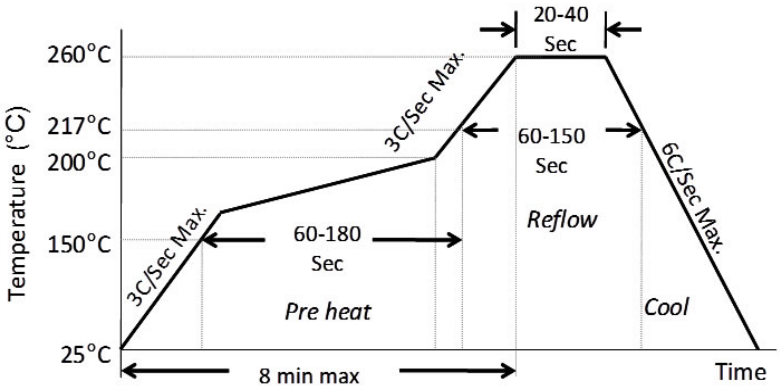


**Figure 2. Solder Reflow Profile**

| 6 QFN MSL 1 @ 260°C refer to JSTD-020C | |
|---|---|
| Ramp-Up Rate (200°C to Peak Temp) | 3°C/sec Max. |
| Preheat Time 150°C to 200°C | 60 - 180 sec |
| Time maintained above 217°C | 60 - 150 sec |
| Peak Temperature | 255 - 260°C |
| Time within 5°C of actual Peak | 20 - 40 sec |
| Ramp-Down Rate | 6°C/sec Max. |
| Time 25°C to Peak Temperature | 8 min Max. |

## OE Function and Output Waveform

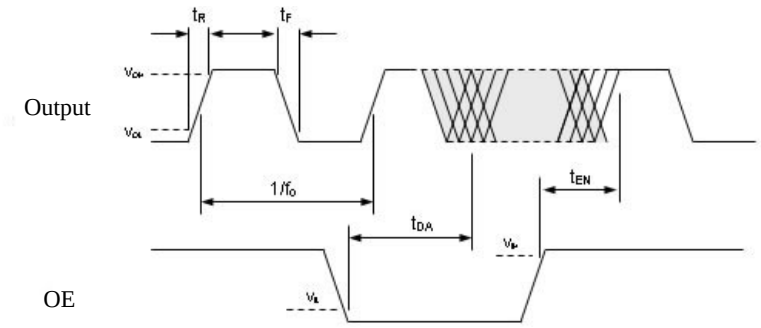


**Figure 3. OE Function and Output Waveform**

## Package Information[7]

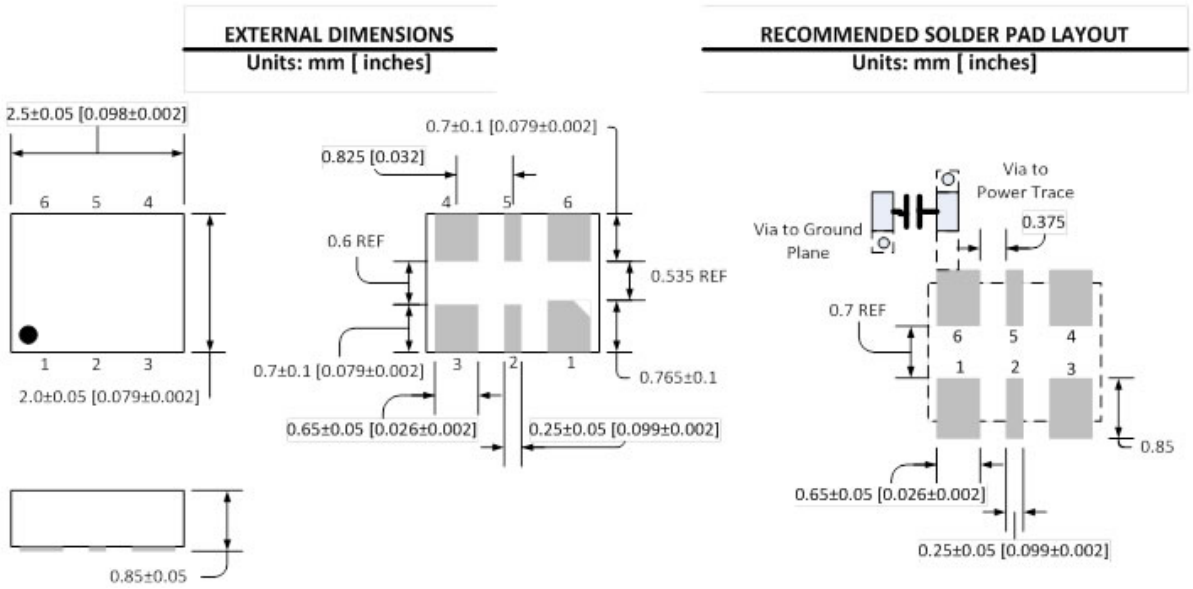


**6-pin TDFN (2.5mm x 2.0mm)**

**Note:**

7. Package information is correct as of the publication date. For updates and most current information, go to www.microchip.com.

Microchip makes no representations or warranties with respect to the accuracy or completeness of the information furnished in this data sheet. This information is not intended as a warranty and Microchip does not assume responsibility for its use. Microchip reserves the right to change circuitry, specifications and descriptions at any time without notice. No license, whether express, implied, arising by estoppel or otherwise, to any intellectual property rights is granted by this document. Except as provided in Microchip's terms and conditions of sale for such products, Microchip assumes no liability whatsoever, and Microchip disclaims any express or implied warranty relating to the sale and/or use of Microchip products including liability or warranties relating to fitness for a particular purpose, merchantability, or infringement of any patent, copyright or other intellectual property right.

Microchip products are not designed or authorized for use as components in life support appliances, devices or systems where malfunction of a product can reasonably be expected to result in personal injury. Life support devices or systems are devices or systems that (a) are intended for surgical implant into the body or (b) support or sustain life, and whose failure to perform can be reasonably expected to result in a significant injury to the user. A Purchaser's use or sale of Microchip Products for use in life support appliances, devices or systems is a Purchaser's own risk and Purchaser agrees to fully indemnify Microchip for any damages resulting from such use or sale.

© 2017 Microchip Technology Inc.