DS90UB95x-Q1EVM Deserializer User's Guide

The Texas Instruments DS90UB95x-Q1EVM evaluation modules (EVM) are functional board designs for evaluating the DS90UB95x-Q1 FPD-Link III deserializers, which convert serialized camera data to MIPI CSI-2 for processing. The MIPI CSI-2 output has four available lanes, and can be configured for either four-lane output or replicated two-lane output. When paired with a compatible serializer, the deserializers receive data from imager(s) supporting cameras as well as satellite RADAR. The DS90UB954-Q1 also supports DS90UB913A/933 serializers.

Some variants are single channel; for these variants ignore references to RX1. Some references are made to serializer backward compatibility; refer to the product datasheet for serializer compatibility.

The **DS90UB954-Q1EVM** is configured for communication with a DS90UB953-Q1 on channel 0 (RX0), and a DS90UB933-Q1 on channel 1 (RX1). The EVM has two Rosenberger FAKRA connectors and configurable Power-over-Coax (PoC) voltage for connecting the camera modules (not included). FPD-Link III interfaces also include a separate low latency bidirectional control channel that conveys control information from an I^2C port. General purpose I/O signals such as those required for camera synchronization and functional safety features also make use of this bidirectional control channel to program registers in the DS90UB954-Q1 as well as the connected serializer and any remote I2C connected devices. There is an onboard MSP430 which functions as a USB2ANY bridge for interfacing with a PC for evaluation. The USB2ANY interfaces with the Analog LaunchPAD GUI tool.

Contents

1 Introduction 3
2 Quick Start Guide 4
3 DS90UB95x-Q1EVM Board Configuration 6
4 Enable and Reset 12
5 Use with DS90UB936-Q1 12
6 Typical Connection and Test Equipment 13
7 Termination Device 13
8 Typical Test Setup 13
9 Equipment References 14
10 Cable References 14
11 Software for DS90UB95xQ1-EVM Evaluation - Analog LaunchPAD (ALP) Software Setup 15
12 Using ALP and DS90UB95x Profile 20
13 Troubleshooting ALP Software 36
14 DS90UB95x-Q1EVM PCB Schematics, Layout and Bill of Materials - DS90UB95x-Q1EVM Schematic 39
15 DS90UB95x-Q1 EVM PCB Layout 47
16 DS90UB95xQ1-EVM Bill of Materials 57

List of Figures

1 DS90UB95x-Q1EVM 3
2 Applications Diagram 4
3 Interfacing to the EVM 5
4 DS90UB95x-Q1EVM with Jumpers Highlighted 6
5 Power-over-Coax Network For Use With DS90UB953 7
6 Power-over-Coax Network For Use With DS90UB933 8
7 Typical Test Setup for Evaluation 13
8 Launching ALP Splash Screen 16

Copyright © 2017–2019, Texas Instruments Incorporated

9 Initial ALP Screen 16
10 Select USB2ANY/Aardvark Setup to Change Profile 17
11 ALP Profiles Dialog 18
12 ALP Profiles Dialog (continued) 19
13 ALP Information Tab 20
14 ALP Registers Tab 21
15 ALP Device ID Expanded 22
16 Save Register Settings Step 1 23
17 Save Register Settings Step 2 24
18 Save Register Settings Step 3 24
19 Load Register Settings Step 1 25
20 Load Register Settings Step 2 25
21 Load Register Settings Step 3 26
22 ALP Scripting Tab 27
23 Pre-Defined Scripts 28
24 Custom Button Creation Step 1 29
25 Custom Button Creation Step 2 29
26 GPIO Tab 32
27 Forwarding Tab 33
28 CSI Registers Tab 34
29 Remote Registers Tab 35
30 ALP No Devices Error 36
31 Windows 7, ALP USB2ANY Driver 36
32 ALP in Demo Mode 37
33 ALP Preferences Menu 37
34 USB2ANY Firmware Update Notice 38
35 USB2ANY Firmware Update Procedure 38
36 DS90UB95x-Q1EVM Block Diagram 39
37 DS90UB95x-Q1EVM Main Circuit - Page 1 40
38 DS90UB95x-Q1EVM CSI-2 Connectors - Page 2 41
39 DS90UB95x-Q1EVM PoC Circuits - Page 3 42
40 DS90UB95x-Q1EVM Power Distribution Circuits - Page 4 43
41 DS90UB95x-Q1EVM LED Circuits - Page 5 44
42 DS90UB95x-Q1EVM USB2ANY Circuits - Page 6 45
43 DS90UB95x-Q1EVM Miscellaneous Hardware 46
44 Top View Composite 47
45 Layer 1: Top Signal Layer 48
46 Layer 2: GND Plane 1 49
47 Layer 3: Mid Signal Layer 1 50
48 Layer 4: GND Plane 2 51
49 Layer 5: GND Plane 3 52
50 Layer 6: Mid Signal Layer 2 53
51 Layer 7: GND Plane 4 54
52 Layer 8: Bottom Signal Layer 55
53 Bottom View Composite 56

List of Tables

1 Power Supply 6
2 Power-over-Coax Power Supply Feed Configuration 8

Copyright © 2017–2019, Texas Instruments Incorporated

3 MIPI CSI-2 Output Signals - J5 and J6 Pinout 9
4 FPD-Link III Signals 10
5 IDx I²C Device Address Select - J23 10
6 I²C Interface Header - J25 10
7 VDDIO Interface Header - J16 11
8 GPIO Interface Header - J22 11
9 CMLOUT Output Signals 11
10 FPD-Link III Mode Control- J15 11
11 Device Mode Control - J11 11
12 LEDs 12
13 DS90UB95x-Q1EVM BOM 57

Trademarks

All trademarks are the property of their respective owners.

1 Introduction

NOTE: The demo board is not optimized for EMI testing. The demo board was designed for easy accessibility to device pins with tap points for monitoring or applying signals, additional pads for termination, and multiple connector options.

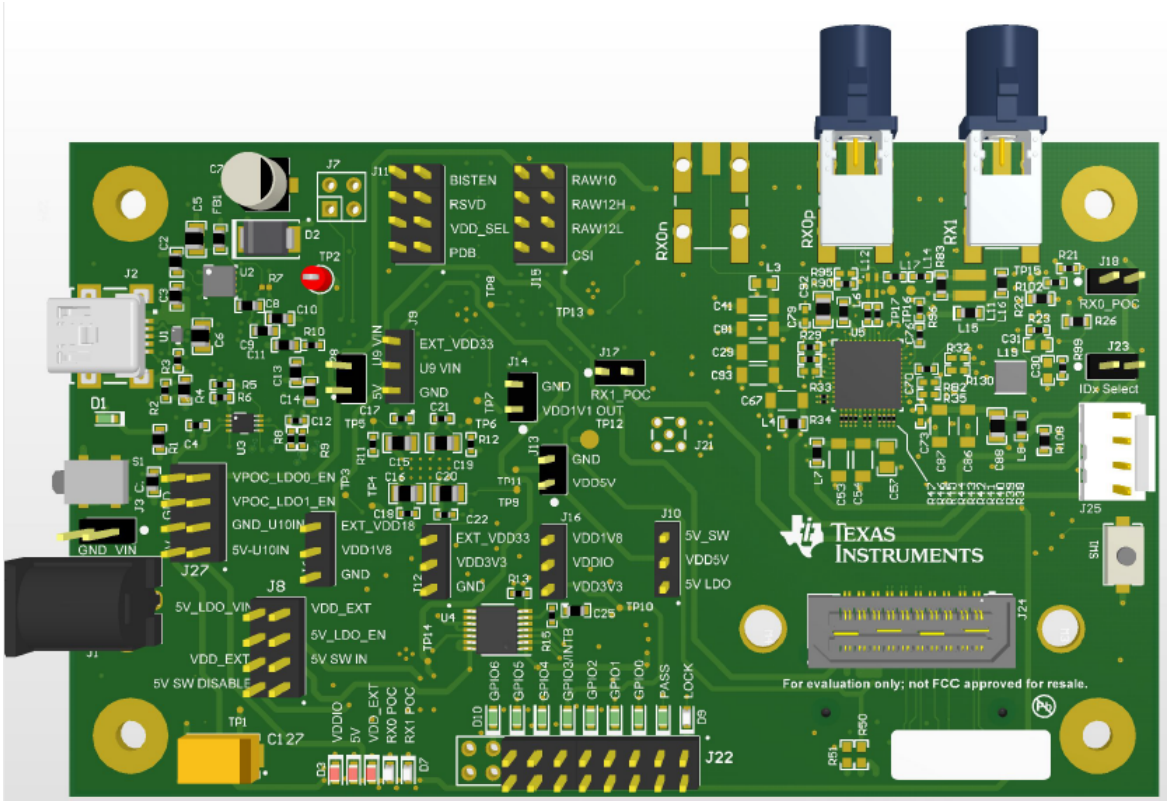

Figure 1. DS90UB95x-Q1EVM

Copyright © 2017–2019, Texas Instruments Incorporated

2 Quick Start Guide

2.1 System Requirements

2.1.1 Included Components

The major components of the DS90UB95x-Q1EVM are:

- DS90UB95x-Q1
- On-board Power-over-Coax (PoC) interface
- FAKRA coax connector(s) for digital video, power, control and diagnostics
- Samtec QSH type connector for CSI-2 interface
- On-board I^2C programming interface

2.1.2 Additional Required Components

To demonstrate the functionality of the DS90UB95x-Q1, the following components are required (not included):

- One compatible serializer.
- One DACAR/FAKRA coax cable
- USB to mini USB cable OR I^2C host controller that supports clock stretching (such as USB2ANY)
- Power supply for 12V @ 1A (current limited bench supply recommended)
- Optional: MIPI CSI-2 output analyzer or host processor

2.2 Applications Diagram

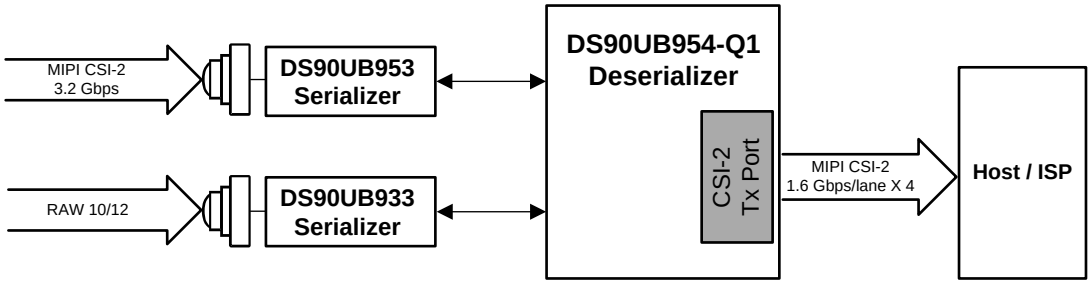

Figure 2. Applications Diagram

Copyright © 2017–2019, Texas Instruments Incorporated

2.3 Major Components of DS90UB95x-Q1EVM

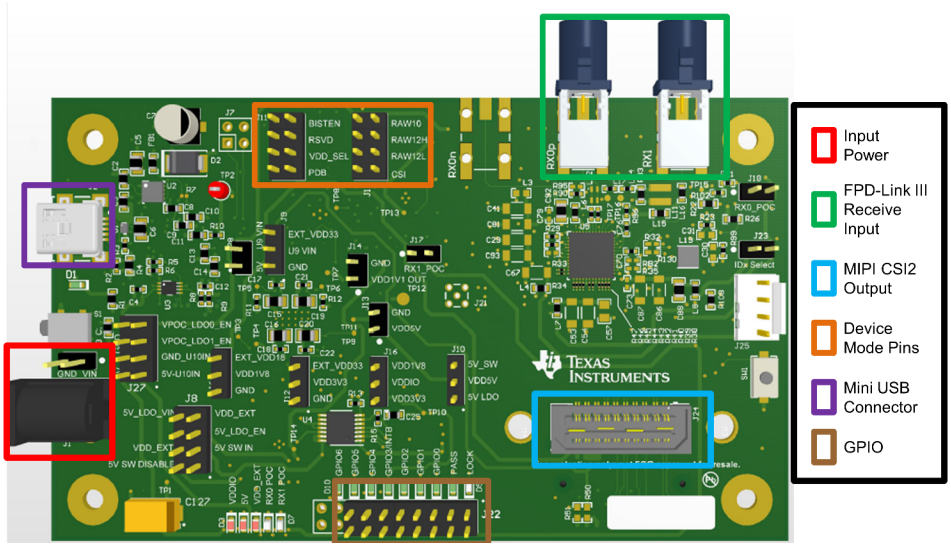

Figure 3. Interfacing to the EVM

Copyright © 2017–2019, Texas Instruments Incorporated

2.4 DS90UB95x-Q1EVM Setup

1. Use the mini USB to USB cable to connect J2 to computer USB port for register programming and open Analog LaunchPAD. See Section 11 for details on installing and using Analog LaunchPAD.
2. Configure jumpers J8, J10, J11, J15, J16, J23, J27 to set device's operating modes. The default configuration can be seen in Figure 4.
3. Configure Power-over-Coax power supplies for RX0 and RX1 with J18 and J17 respectively.
4. Connect the DS90UB95x-Q1EVM to DS90UB953-Q1EVM (or variant) to RX0 and/or DS90UB933-Q1EVM to RX1 using a coax cable.
5. Interface MIPI CSI-2 output signals (J24) to test equipment or host processor (optional, not required to check status of FPD-Link III connection between serializer and deserializer).
6. Provide power to board. TI recommends using current limited bench supply to provide power to J1 (barrel jack) or J3.

3 DS90UB95x-Q1EVM Board Configuration

3.1 Default Configuration

Default jumper placement shown in red. This configuration sets the device into the following mode

- Device is set for FPD-Link III inputs from coax in CSI mode (for DS90UB953-Q1EVM (or variant))
- VDDIO is set to 1.8V
- VDD5V is powered by the 5V LDO
- The 3.3V + 1.1V LDO (U10) is powered by VDD5V
- The 9V LDO for PoC for RX0 and RX1 are enabled
- 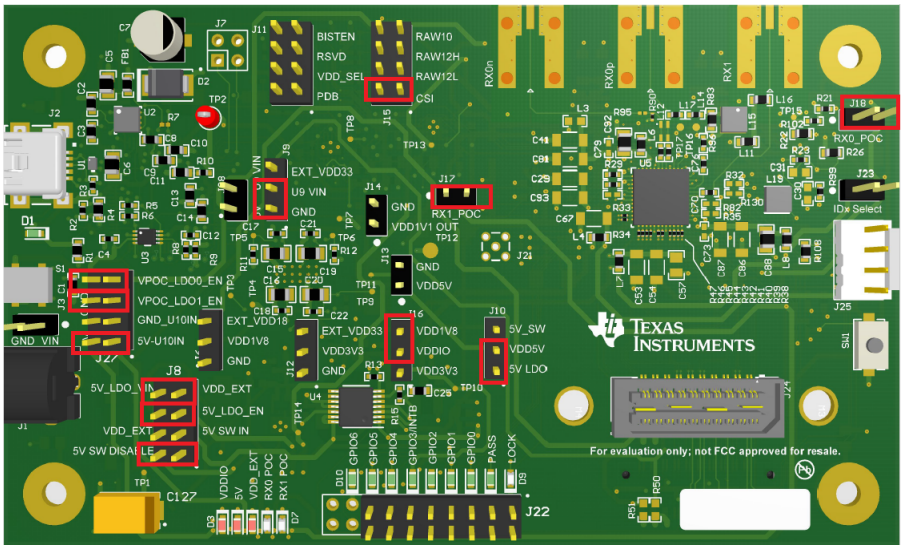

Figure 4. DS90UB95x-Q1EVM with Jumpers Highlighted

3.2 Power Supply

Table 1. Power Supply

Reference	Signal	Description
J1/J3	+12V	Main Power Single +12VDC (nominal) power connector that supplies power to the entire board.

Copyright © 2017–2019, Texas Instruments Incorporated

3.3 Power-over-Coax Interface

The DS90UB95x-Q1EVM offers two Power-over-Coax interfaces (PoC) to connect cameras through a coaxial cable with FAKRA connectors. Power is delivered on the same conductor that is used to transmit video and control channel data between the host and the camera. By default, 5V power supply is applied over the coax cable. Refer to for other PoC configurations.

NOTE: For port RX0, the PoC network is configured for a DS90UB953-Q1EVM (or variant), and for RX1 the PoC network is configured for a DS90UB933-Q1. Only use a serializer EVM with the correct PoC network. To use PoC with two DS90UB953-Q1EVM (or variant) or DS90UB933-Q1 EVM's, one of the PoC networks must be reworked. You may also open the PoC circuit and power the serializer EVM directly from another supply.

For Power-over-Coax (PoC) on the EVM, the circuit uses a filter network as shown in Figure 6. The PoC network frequency response corresponds to the bandwidth compatible with DS90UB953-Q1EVM (or variant) chipsets.

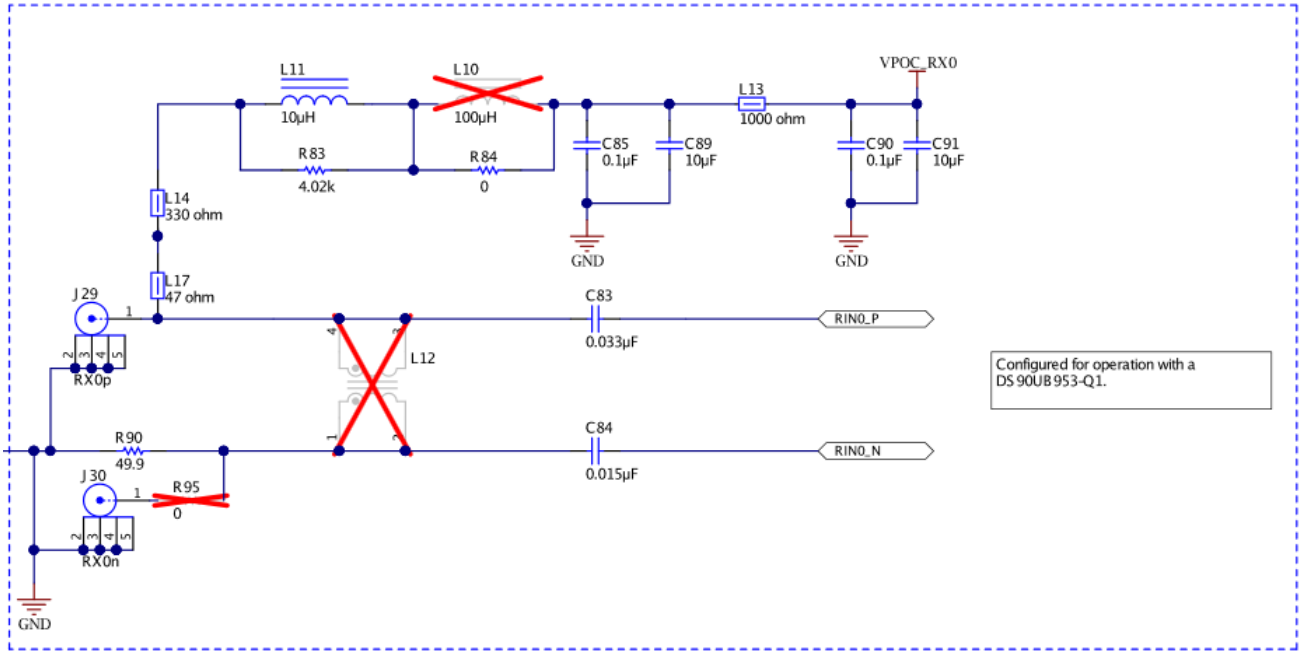

Figure 5. Power-over-Coax Network For Use With DS90UB953

Copyright © 2017–2019, Texas Instruments Incorporated

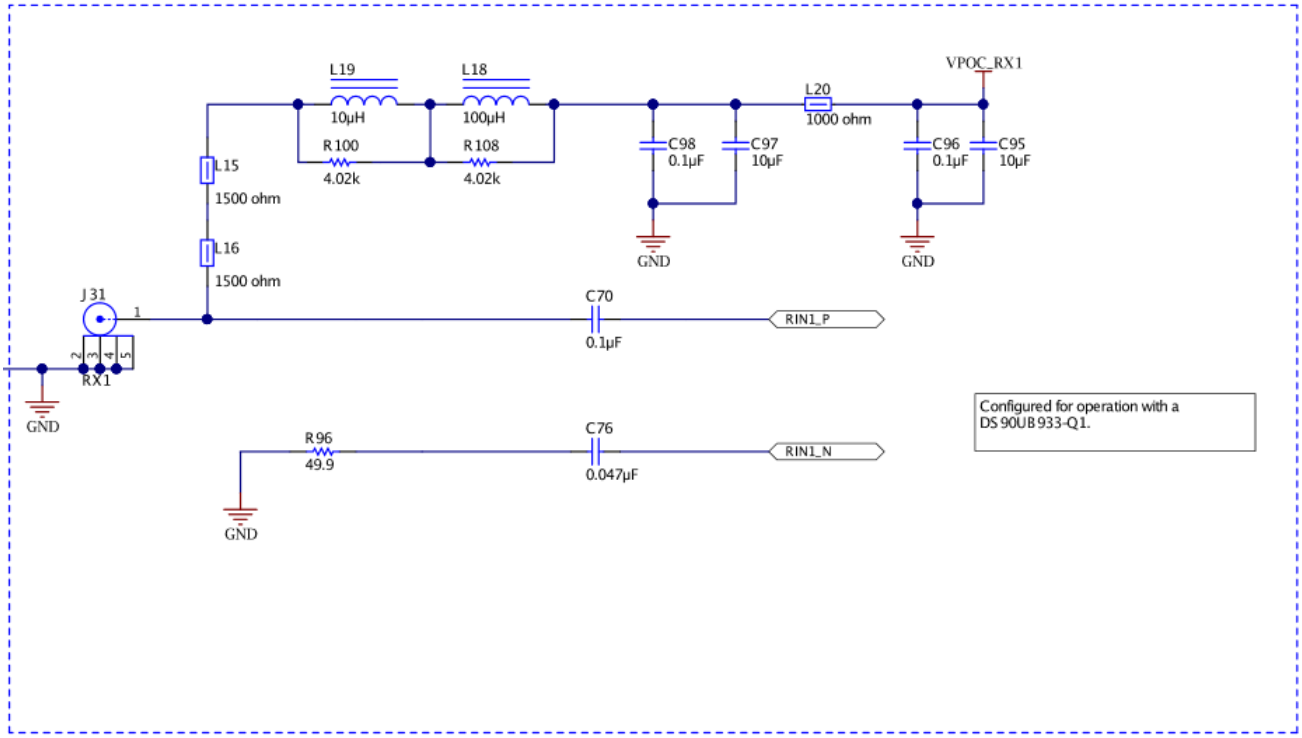

Figure 6. Power-over-Coax Network For Use With DS90UB933

WARNING

Verify that the Power-over-Coax voltage is properly set before plugging into RX0 or RX1. Power supply is not fused. Over-voltage will cause damage to boards directly connected due to incorrect input power supplies. DS90UB913A-Q1EVM is designed for a maximum of 5V PoC. To use DS90UB913A-Q1EVM with DS90UB954-Q1EVM, open J17 or J18 to disable PoC, and either power the DS90UB913A-Q1EVM separately or by applying 5V to the J17 or J18 pin on DS90UB954-Q1EVM.

Table 2. Power-over-Coax Power Supply Feed Configuration

Reference	Signal	Description
J18	VPOC_RX0	This sets the voltage for Power-over-Coax on RX0
		Jumper installed: +9V power supply from VPOC_LDO0_9V
		Jumper Open: No PoC connected. Apply power to pin1 or leave open and power serializer separately.
J17	VPOC_RX1	This sets the voltage for Power-over-Coax on RX1
		Jumper installed: +9V power supply from VPOC_LDO1_9V
		Jumper Open: No PoC connected. Apply power to pin1 or leave open and power serializer separately.

Copyright © 2017–2019, Texas Instruments Incorporated

3.4 MIPI CSI-2 Output Signals

There are two options provided for passing out the deserialized data on the DS90UB95x-Q1EVM . The first is a Samtec QSH-type connector, J24, on the top of the board that can be mated with a matching QTH type connector. The mating connector part number for the J24 connector is QTH-020-01-H-D-DP-A. On the bottom of the board is a Samtec QTH-type connector, J26, meant for mating with a TDAx evaluation kit. The signals to the connectors are the same, including access to I^2C and other signals including PDB and GPIO. Only one connector should be used at a time. If the J6 connector on the bottom is to be used, populate the zero ohm resistors on the bottom of the board which extend the traces to the J26 connector.

There are third party solutions like the HDR-128291-XX breakout board from Samtec which can be used. The HDR- 128291-XX is a breakout board with a mating connector to J24 or J26, providing access to each pin through standard SMA male connectors. More info on this breakout board can be obtained from Samtec website. Another third party option is the ZX100 by Zebax Technologies. More information on this board can be obtained from Zebax website.

Table 3. MIPI CSI-2 Output Signals - J5 and J6 Pinout

Pin #	Signal Name	Pin #	Signal Name
1	NC	2	EXP_SCL (I2C_SCL or I2C_SCL2)
3	NC	4	EXP_SDA (I2C_SDA or I2C_SDA2)
5	CSI_CLK0_P	6	NC
7	CSI_CLK0_N	8	NC
9	CSI_D0_P	10	EXP_REF_CLK (REFCLK)
11	CSI_D0_N	12	GND
13	CSI_D1_P	14	RESET (PDB)
15	CSI_D1_N	16	GND
17	CSI_D2_P	18	SPI_MOSI (GPIO0 or GPIO3)
19	CSI_D2_N	20	SPI_SCLK (GPIO1 or GPIO4)
21	CSI_D3_P	22	SPI_CS (GPIO2 or GPIO5)
23	CSI_D3_N	24	GND
25	CSI_CLK1_P	26	NC
27	CS_CLK1_N	28	NC
29	NC	30	VDD_3V3
31	NC	32	VDD_3V3
33	NC	34	VDD_3V3
35	NC	36	VDD_3V3
37	NC	38	VDD_1V8
39	NC	40	VDD_1V8

NOTE: Populate R60-R69, R71,R72 (0Ω resistors) only when using the J26 connector on the bottom of the board. Do not use J24 and J26 connectors at the same time.

Copyright © 2017–2019, Texas Instruments Incorporated

3.5 FPD-Link III Signals

Table 4. FPD-Link III Signals

Reference	Signal	Description
RX0p	RIN0+	FAKRA connector for DS90UB953-Q1EVM (or variant) serializer
RX0n	RIN0-	FAKRA connector footprint for use with STP applications.
RX1	RIN1+	FAKRA connector for DS90UB933-Q1 serializer

3.6 I²C Interface

In addition to the on-board USB2ANY controller accessible via the mini-USB port, a standalone external I²C host can connect via J25 for programming purposes. Examples of external I²C host controllers are Texas Instruments USB2ANY and Total Phase Aardvark I²C/SPI host adapter (Total Phase Part#: TP240141).

When the I²C interface is accessed through connector J25, I²C signal levels can be configured through J16 to be at 1.8V or 3.3V. Optional access to I²C signals are also available via CSI-2 connectors J24 (top) and J26 (bottom).

Table 5. IDx I²C Device Address Select - J23

Reference	Signal	Description
J23	IDX Select	Selects I²C Device Address
		Open: 0x30 (7'b) or 0x60 (8'b)
		Short: 0x3D (7'b) or 0x7A (8'b) (Default)

Table 6. I²C Interface Header - J25

Reference	Signal	Description
J25.1	VDDIO	I²C bus voltage (tied to VDDIO)
J25.2	I2C_SCL	I²C Clock Interface for I²C bus
J25.3	I2C_SDA	I²C Data Interface for I²C bus
J25.4	GND	Ground

Copyright © 2017–2019, Texas Instruments Incorporated

3.7 Control Interface

Table 7. VDDIO Interface Header - J16

Reference	Signal	Description
J16	VDDIO	Selects VDDIO bus voltage
		Short pins 1-2: 3.3V IO (Default)
		Short pins 2-3: 1.8V IO

Table 8. GPIO Interface Header - J22

Reference	Signal	Description
J22.1	GPIO0	General Purpose Input/Output 0
J22.3	GPIO1	General Purpose Input/Output 1
J22.5	GPIO2	General Purpose Input/Output 2
J22.7	GPIO3/INTB	General Purpose Input/Output 3 / Interrupt (Active Low). Pulled up to VDDIO by 4.7kΩ
J22.9	GPIO4	General Purpose Input/Output 4
J22.11	GPIO5	General Purpose Input/Output 5
J22.13	GPIO6	General Purpose Input/Output 6
J22.15	EN 25MHz	Enable/Disable 25MHz Oscillator

Table 9. CMLOUT Output Signals

Reference	Signal	Description
TP16	CMLOUTP	Test Pad for Channel Monitor Loop-through Driver
TP17	CMLOUTN	Test Pad for Channel Monitor Loop-through Driver

Table 10. FPD-Link III Mode Control- J15(1)

Reference	Mode	Description
J15.1	1	CSI Mode (DS90UB953-Q1 compatible)(2)
J15.2	2	RAW12 / LF (DS90UB933 compatible)
J15.3	3	RAW12 / HF (DS90UB933 compatible)
J15.4	4	RAW10 (DS90UB933 compatible)

(1) Only set one ON.
(2) This function is only available with 2-MP ADAS chipsets.

Table 11. Device Mode Control - J11

Reference	Signal	Input = L	Input = H	Description
J11.1	BISTEN	For Normal operation (Default)	Test Mode enable	Test Mode
J11.2	RSVD	Tied to GND (Default)	N/A	Reserved
J11.3	VDD_SEL	Internal 1.1V regulator from 1.8V supply (Default)	1.1V is supplied to VDD1V1 pins	VDD 1.1V Source Select
J11.4	PDB	Device is powered down	Device is enabled (Default)	Power-down Mode

Copyright © 2017–2019, Texas Instruments Incorporated

Table 12. LEDs

Reference	LED Color	LED Name	Description
D3	Red	VDDIO	Illuminates on VDDIO Power
D4	Red	VDD5V	Illuminates on +5V
D5	Red	VDD_EXT	Illuminates if 12V Power is applied to DC-IN J24
D6	Orange	VPOC_RX1	Illuminates if VPOC_RX1 is ON
D7	Orange	VPOC_RX0	Illuminates if VPOC_RX0 is ON
D8	Orange	PASS	Illuminates if PASS pin is HIGH
D9	Green	LOCK	Illuminates if LOCK pin is HIGH
D10	Green	GPIO6	Illuminates if GPIO6 is HIGH
D11	Green	GPIO5	Illuminates if GPIO5 is HIGH
D12	Green	GPIO4	Illuminates if GPIO4 is HIGH
D13	Green	GPIO3/INTB	Illuminates if GPIO3 is HIGH, or GPIO3 disabled (pulled-up)
D14	Green	GPIO2	Illuminates if GPIO2 is HIGH
D15	Green	GPIO1	Illuminates if GPIO1 is HIGH
D16	Green	GPIO0	Illuminates if GPIO0 is HIGH

4 Enable and Reset

The DS90UB95x-Q1 is enabled and reset by controlling the PDB input level. PDB has an internal pull down, and should remain low until all supplies are stable. There are three device enable and reset/power-down options for the EVM.

- RC timing option: The RC delay created with C123 and R131 connected to the PDB pin is the default option for delaying PDB on the EVM. This is used for simplicity of debugging and using the device. TI recommends using a GPIO signal from a host process or to drive PDB after all rails have settled in customer designs.
- External control option: A momentary push-button switch, SW1, is available for manually driving the PDB signal low while the button is held.
- Software control option: The PDB pin is also made available in the J24 and J26 CSI-2 output connectors, allowing a host processor to control the PDB pin.

5 Use with DS90UB936-Q1

The DS90UB954-Q1EVM may also be used to evaluate the DS90UB936-Q1. The only modification required is to swap the DS90UB954-Q1 with the DS90UB936-Q1.

Copyright © 2017–2019, Texas Instruments Incorporated

6 Typical Connection and Test Equipment

The following is a list of typical test equipment that may be used to monitor the MIPI CSI-2 signals from the DS90UB95x-Q1:

1. Logic Analyzer
2. Any SCOPE with a bandwidth of at least 4 GHz for observing differential signals.
3. UNH-IOL MIPI D-PHY Reference Termination Board (RTB)
4. UNH-IOL MIPI D-PHY/CSI/DSI Probing Board
5. UNH-IOL CSIGUI Tool

7 Termination Device

A termination device is required to properly monitor and measure the transmission of the MIPI DPHY signals. The termination device should support the change of signals as it switches between LP and HS modes. This can be provided by either a CSI-2 receiver or a dedicated dynamic termination board. The recommended termination board is the UNH-IOL MIPI D-PHY Reference Termination Board (RTB).

8 Typical Test Setup

Figure 7 illustrates a typical test set up used to measure and evaluate DS90UB95x-Q1.

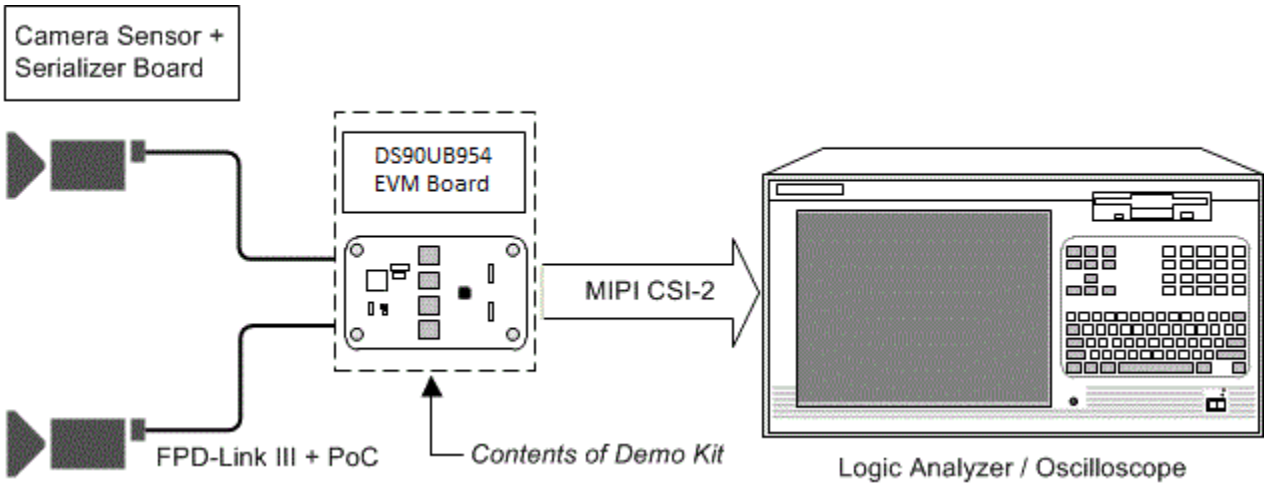

Figure 7. Typical Test Setup for Evaluation

Copyright © 2017–2019, Texas Instruments Incorporated

9 Equipment References

NOTE: Please note that the following references are supplied only as a courtesy to our valued customers. It is not intended to be an endorsement of any particular equipment or supplier.

Logic Analyzer:

Keysight Technologies

www.keysight.com

MIPI Test Fixtures:

University of New Hampshire InterOperability Laboratory (UNH-IOL)

www.iol.unh.edu/services/testing/mipi/fixtures.php

Aardvark I^2C/SPI Host Adapter Part Number: TP240141

www.totalphase.com/products/aardvark_i2cspi

10 Cable References

FAKRA coaxial cable:

www.leoni-automotive-cables.com

Rosenberger FAKRA connector:

http://www.rosenberger.com/en/products/automotive/fakra.php

Copyright © 2017–2019, Texas Instruments Incorporated

11 Software for DS90UB95xQ1-EVM Evaluation - Analog LaunchPAD (ALP) Software Setup

11.1 System Requirements

Operating System:	Windows 7 64-bit
USB:	USB2ANY (on-board, accessible via mini USB connector)
USB2ANY Firmware Version:	2.5.2.0
USB:	Aardvark I^2C/SPI host adapter p/n TP240141

11.2 Download Contents

Latest TI Analog LaunchPAD can be downloaded from: http://www.ti.com/tool/alp.

Download and extract the zip file to a temporary location that can be deleted later.

The following installation instructions are for a PC running Windows 7 64-bit Operating System.

11.3 Installation of the ALP Software

Execute the ALP Setup Wizard program called “ALPF_setup_v_x_x_x.exe” that was extracted to a temporary location on the local drive of your PC.

There are 7 steps to the installation once the setup wizard is started:

1. Select the "Next" button.
2. Select “I accept the agreement” and then select the “Next” button.
3. Select the location to install the ALP software and then select the “Next” button.
4. Select the location for the start menu shortcut and then select the “Next” button.
5. There will then be a screen that allows the creation of a desktop icon. After selecting the desired choices select the “Next” button.
6. Select the “Install” button, and the software will then be installed to the selected location.
7. Uncheck “Launch Analog LaunchPAD” and select the “Finish” button. The ALP software will start if “Launch Analog LaunchPAD” is checked, but it will not be useful until the USB driver is installed and board is attached.

Power the DS90UB95x-Q1 EVM board with a 12 VDC power supply.

Copyright © 2017–2019, Texas Instruments Incorporated

11.4 Startup - First Launch

Make sure all the software has been installed and the hardware is powered on and connected to the PC. Execute “Analog LaunchPAD” shortcut from the start menu. The default start menu location is under All Programs > Texas Instruments > Analog LaunchPAD vx.x.x > Analog LaunchPAD to start MainGUI.exe.



Figure 8. Launching ALP Splash Screen

Upon first launch of the Analog LaunchPAD utility, the default device will be DS90UB925. The active device can be seen as highlighted in Figure 9, here showing the DS90UB95x as active. If the active device is already set to DS90UB95x you may skip to Section 12.

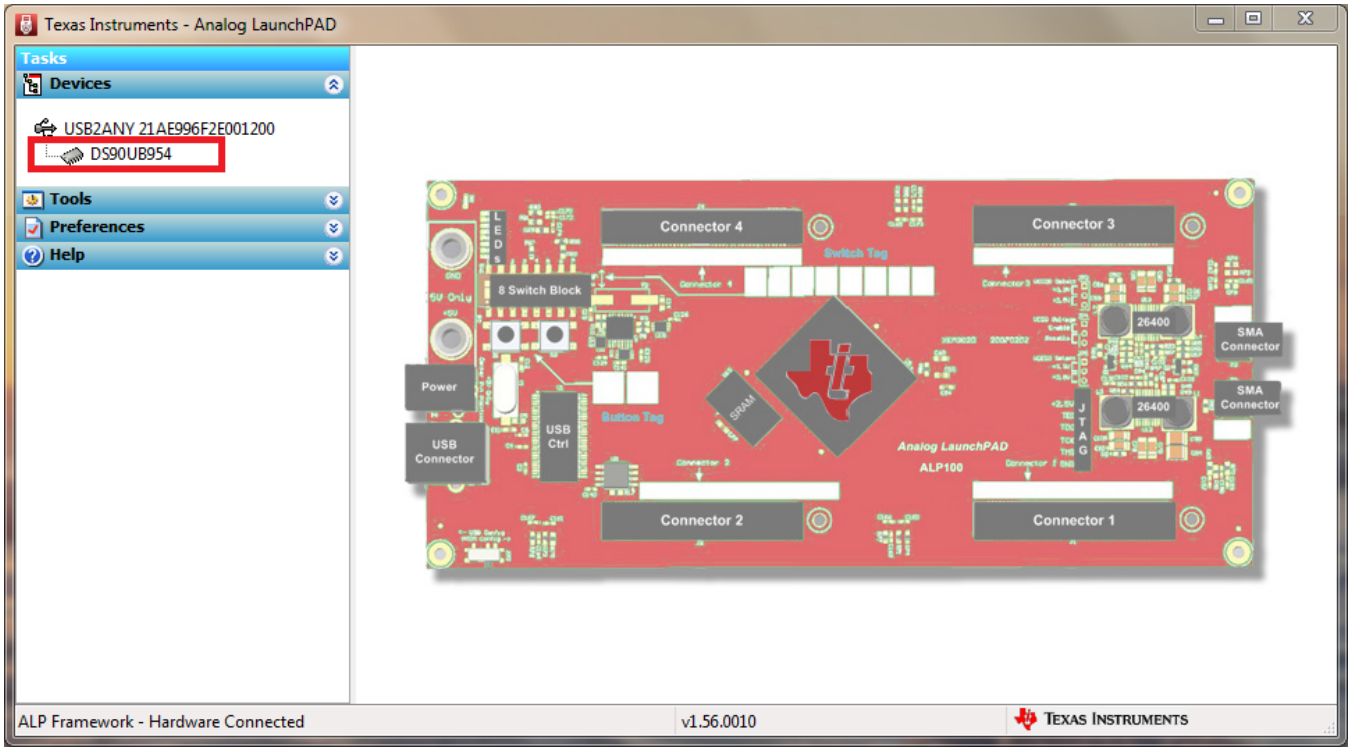

Figure 9. Initial ALP Screen

Copyright © 2017–2019, Texas Instruments Incorporated

Follow the steps beginning with Figure 10 to change the ALP profile to DS90UB95x.

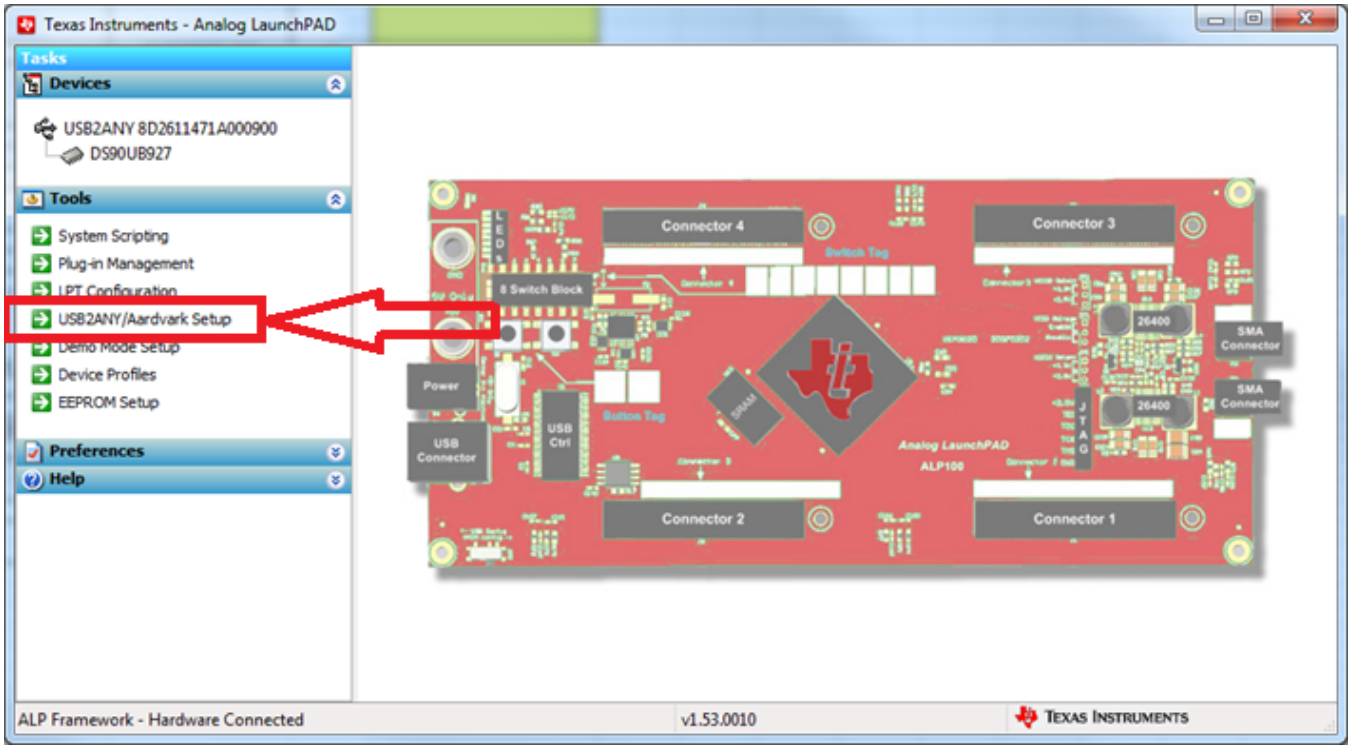

Figure 10. Select USB2ANY/Aardvark Setup to Change Profile

Copyright © 2017–2019, Texas Instruments Incorporated

Select the active profile and click "Remove". Scroll down the list of available profiles to DS90UB95x, click to highlight it, click "Add", and click "Ok".

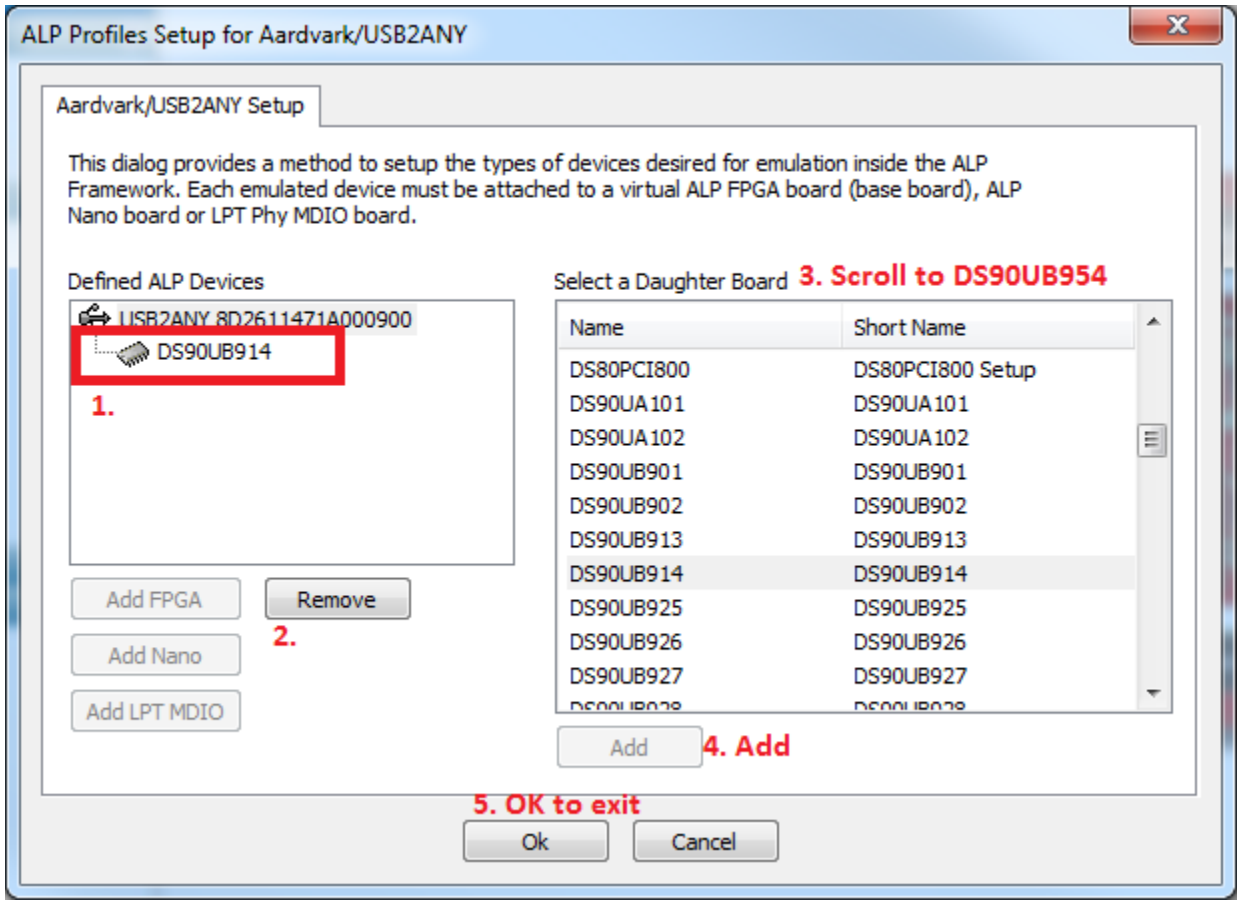

Figure 11. ALP Profiles Dialog

Copyright © 2017–2019, Texas Instruments Incorporated

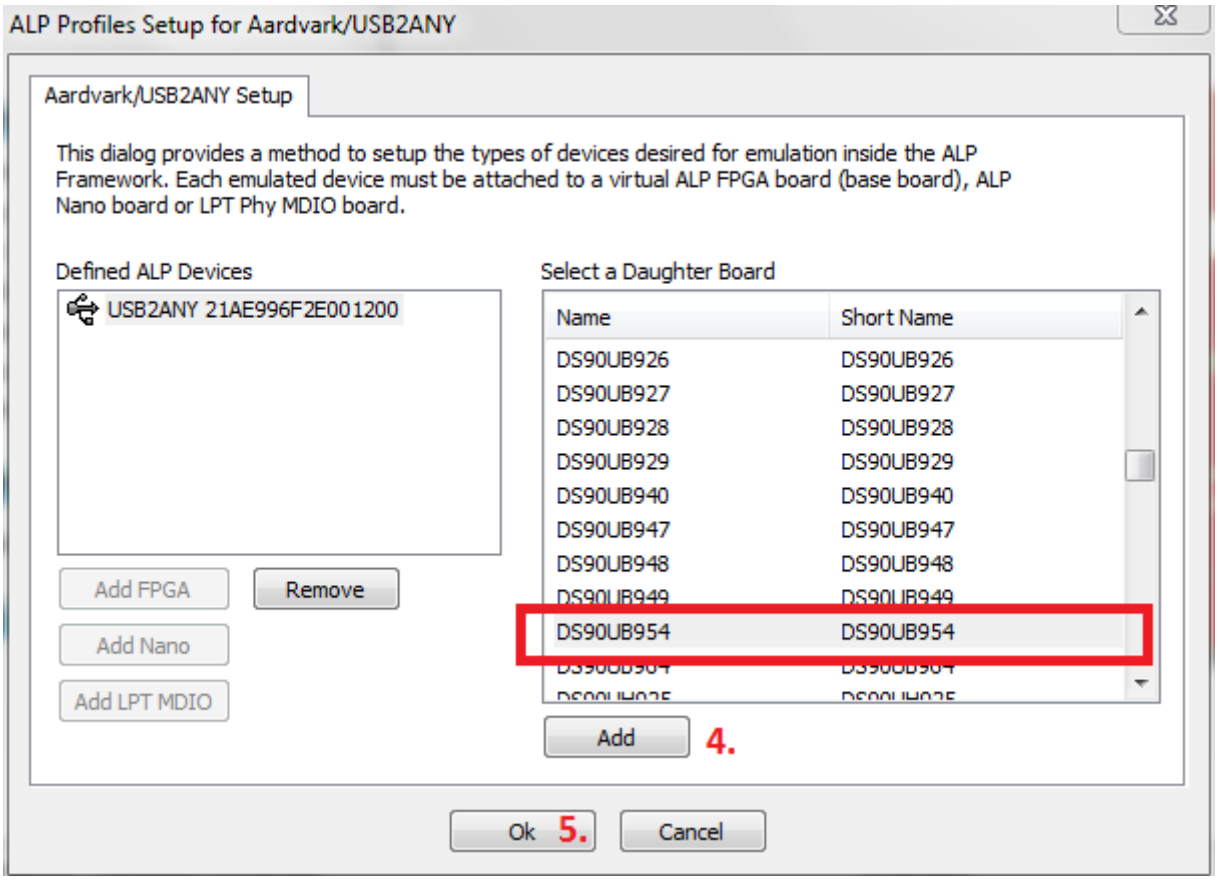

Figure 12. ALP Profiles Dialog (continued)

Copyright © 2017–2019, Texas Instruments Incorporated

12 Using ALP and DS90UB95x Profile

12.1 Information Tab

Under the Devices tab click on “DS90UB95x” to select the device and open up the device profile and its associated tabs. After selecting the DS90UB95x, the following screen should appear. Figure 13 shows the Information tab. The information tab shown assumes active and locked connection to a DS90UB953 on RX0, and an open port on RX1.

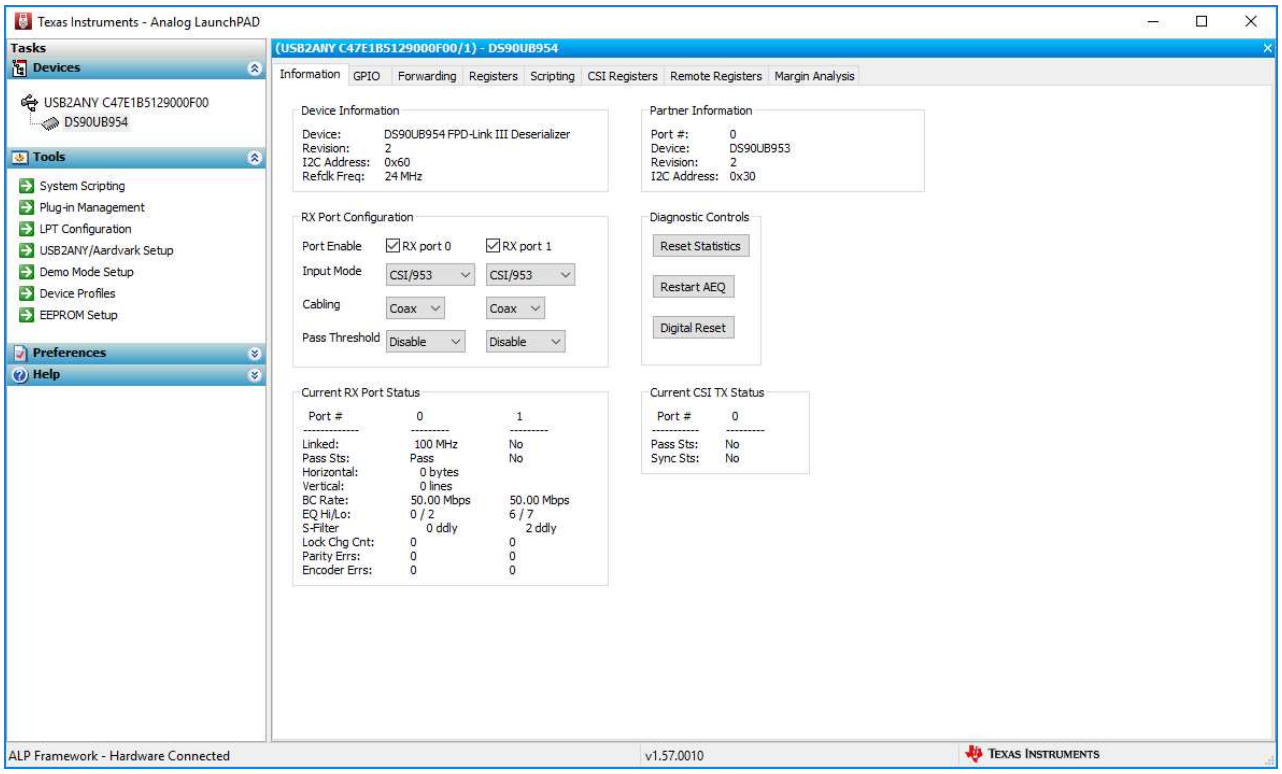

Figure 13. ALP Information Tab

Copyright © 2017–2019, Texas Instruments Incorporated

12.2 Registers Tab

The Registers tab is shown in Figure 14. Note that the value of the currently selected register is populated in the "Value: " box at the top. Figure 14 shows the register I2C_DEVICE_ID is reading a hexadecimal value of 0x60.

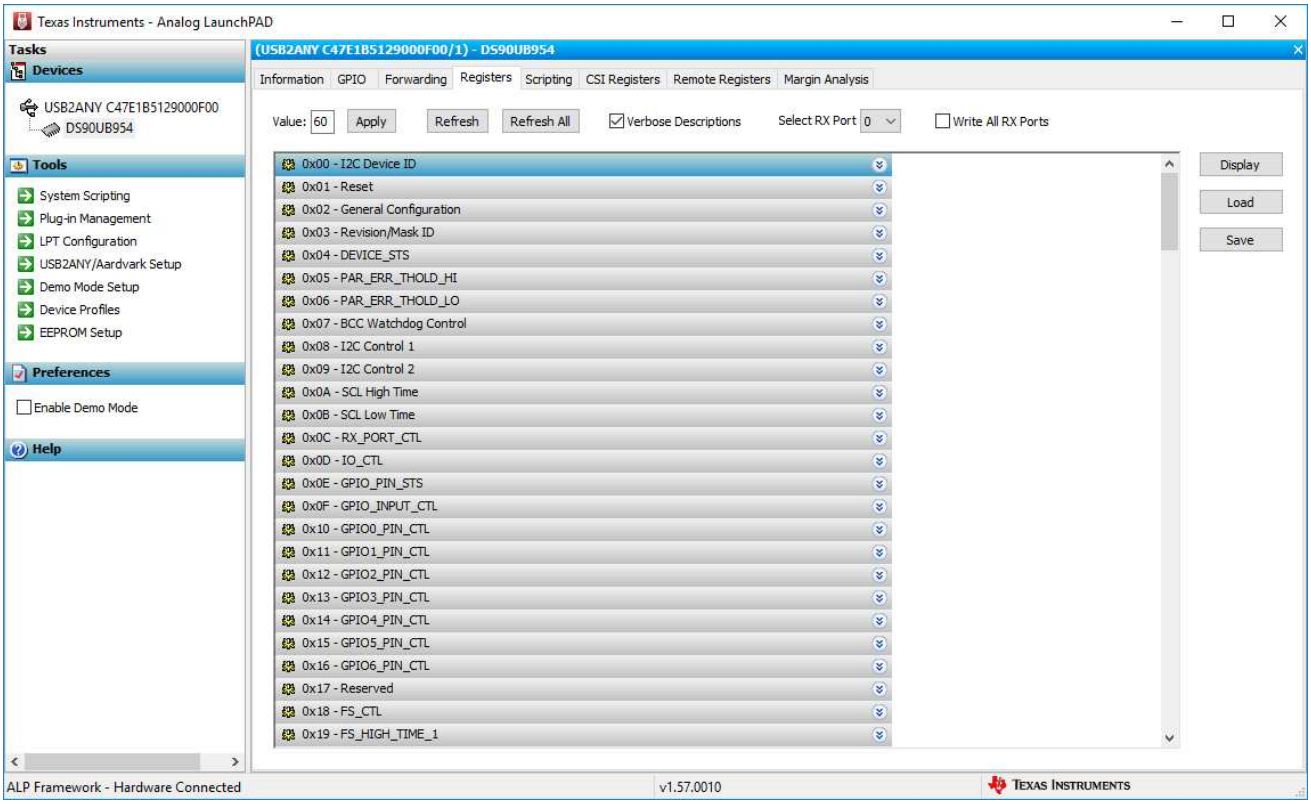

Figure 14. ALP Registers Tab

Copyright © 2017–2019, Texas Instruments Incorporated

12.3 Registers Tab - Address 0x00 Expanded

By double clicking on the Address bar



or a single click on  . Address 0x00 expanded reveals contents by bits. Any register address displayed can be expanded.

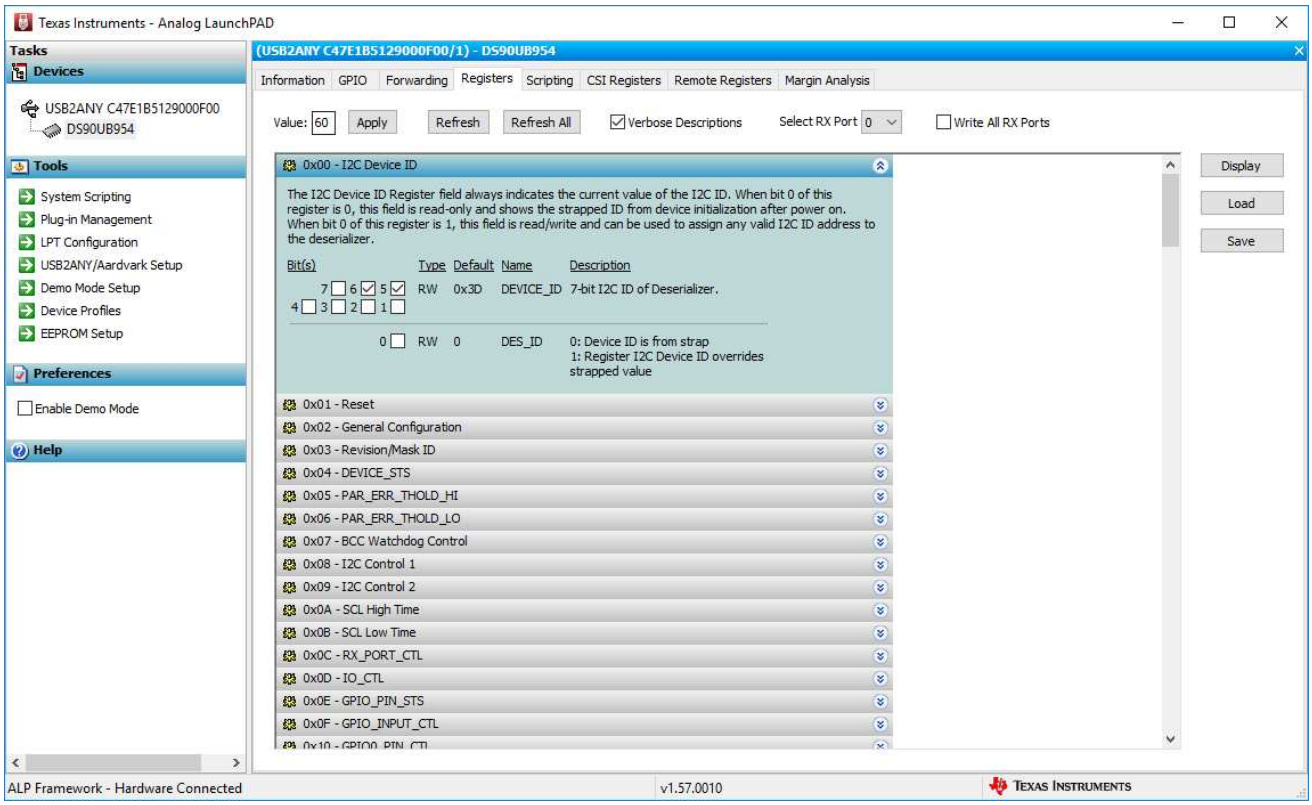

Figure 15. ALP Device ID Expanded

Any RW Type register can be written into by writing the hex value into the “Value:” box, 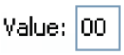

or putting the pointer into the individual register bit(s) box by a left mouse click to put a check mark (indicating a “1”) or unchecking to remove the check mark (indicating a “0”). Click the “Apply” button to write to the register, and “refresh” to see the new value of the selected (highlighted) register.

The box toggles on every mouse click.

12.3.1 Port Specific Registers

Certain registers in the DS90UB95x-Q1 are port specific and have two copies, one for each FPD-Link RX port. The "Select RX Port" drop-down menu controls which port's registers are read. If the "Write All RX Ports" box is checked, both ports' registers will be written to. If it is not checked, only the port indicated by the drop-down menu will be written to. These controls set the value of register 0x4C, which is used to set which port is being read and which port(s) are being written to.

Copyright © 2017–2019, Texas Instruments Incorporated

12.4 Saving and Loading Register Settings

Register settings can be saved and later loaded to the device using the "Save" and "Load" buttons. To save, click on the "Save" button, select the file location, and name the file. If desired, comments may be recorded about the register settings . After the registers are saved, a dialog box will appear confirming that the registers were saved successfully. To load saved registers, click the "Load" button and select the .nrd file. Additional information about the register settings, including any comments, will be displayed in the dialog box. After confirming these are the desired registers settings, a message will appear confirming that the registers were successfully loaded.

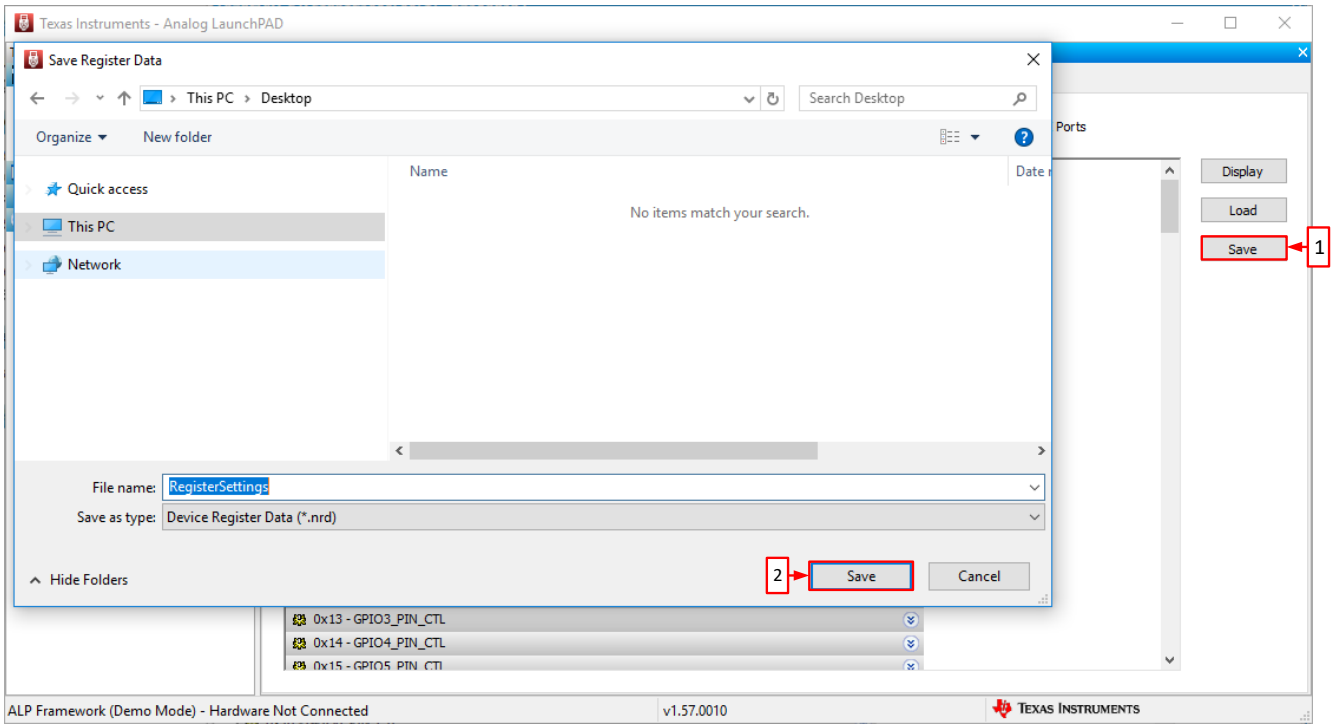

Figure 16. Save Register Settings Step 1

Copyright © 2017–2019, Texas Instruments Incorporated

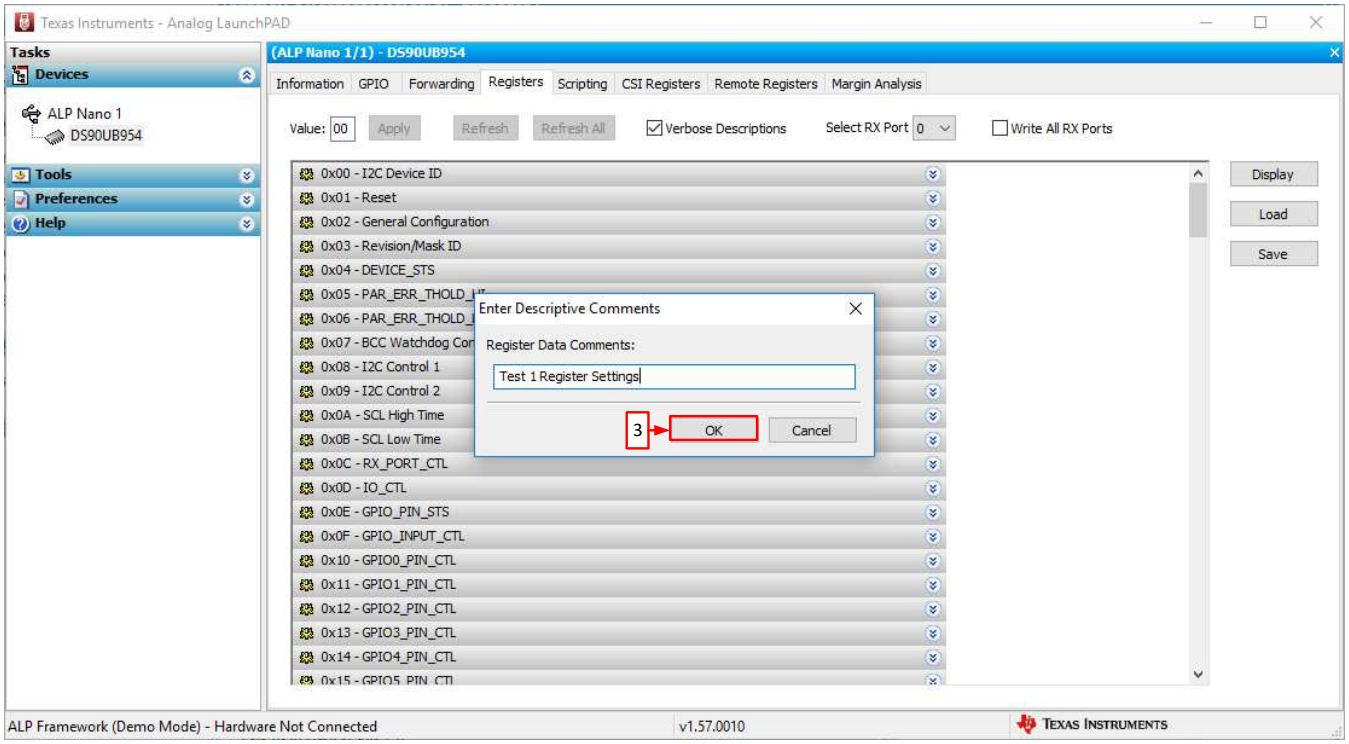

Figure 17. Save Register Settings Step 2

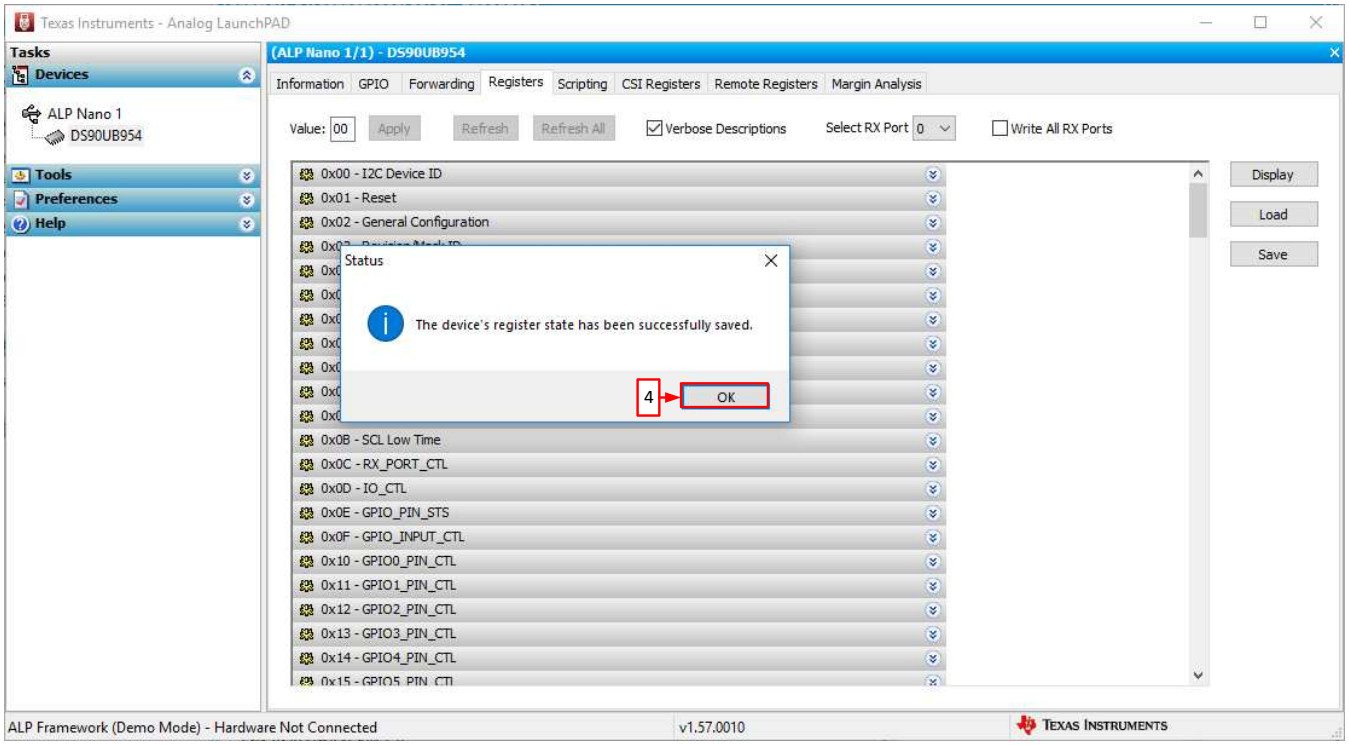

Figure 18. Save Register Settings Step 3

Copyright © 2017–2019, Texas Instruments Incorporated

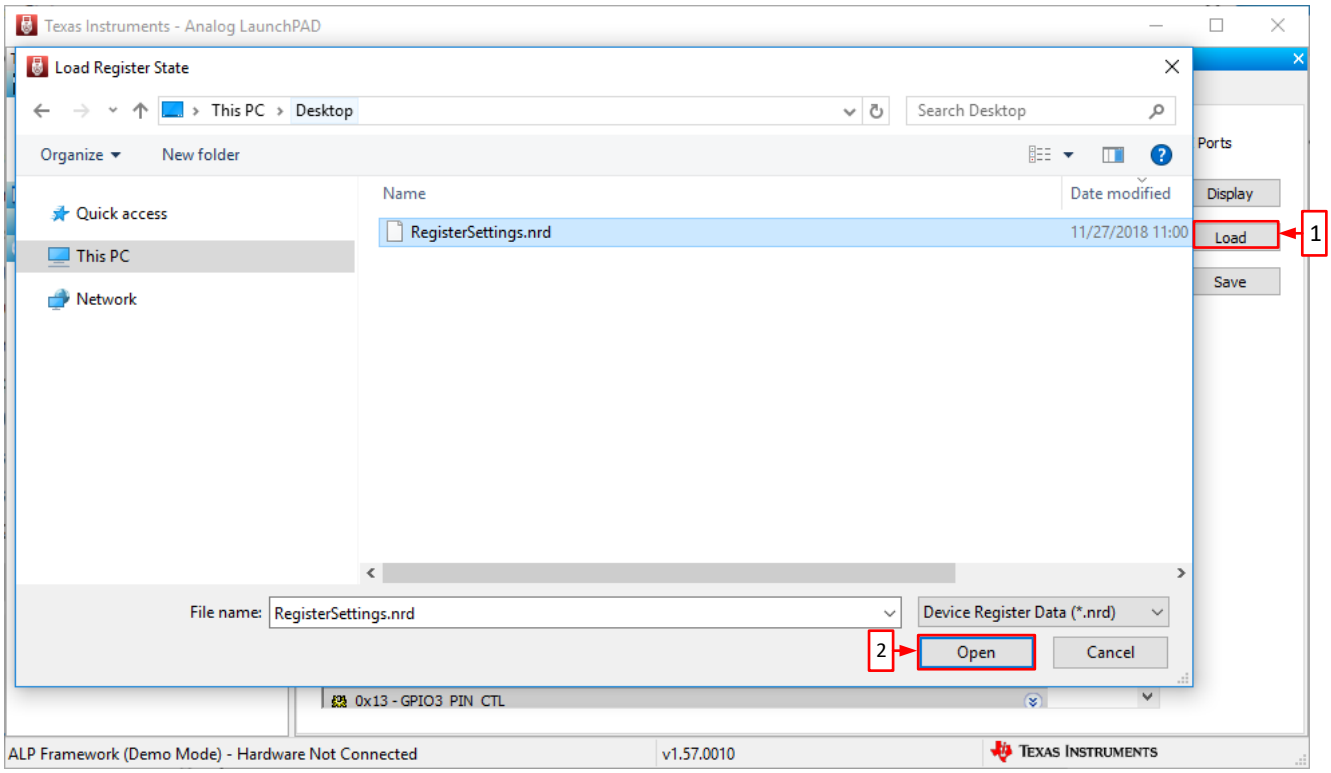

Figure 19. Load Register Settings Step 1

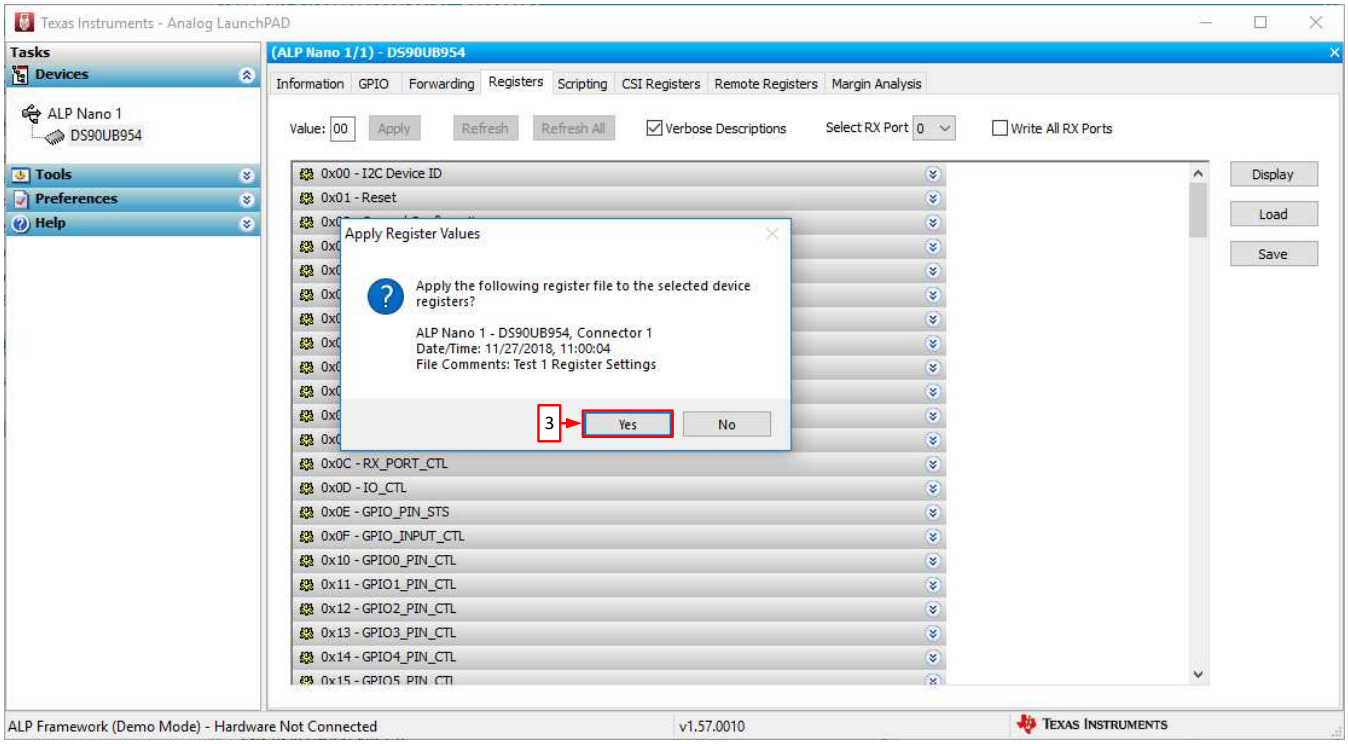

Figure 20. Load Register Settings Step 2

Copyright © 2017–2019, Texas Instruments Incorporated

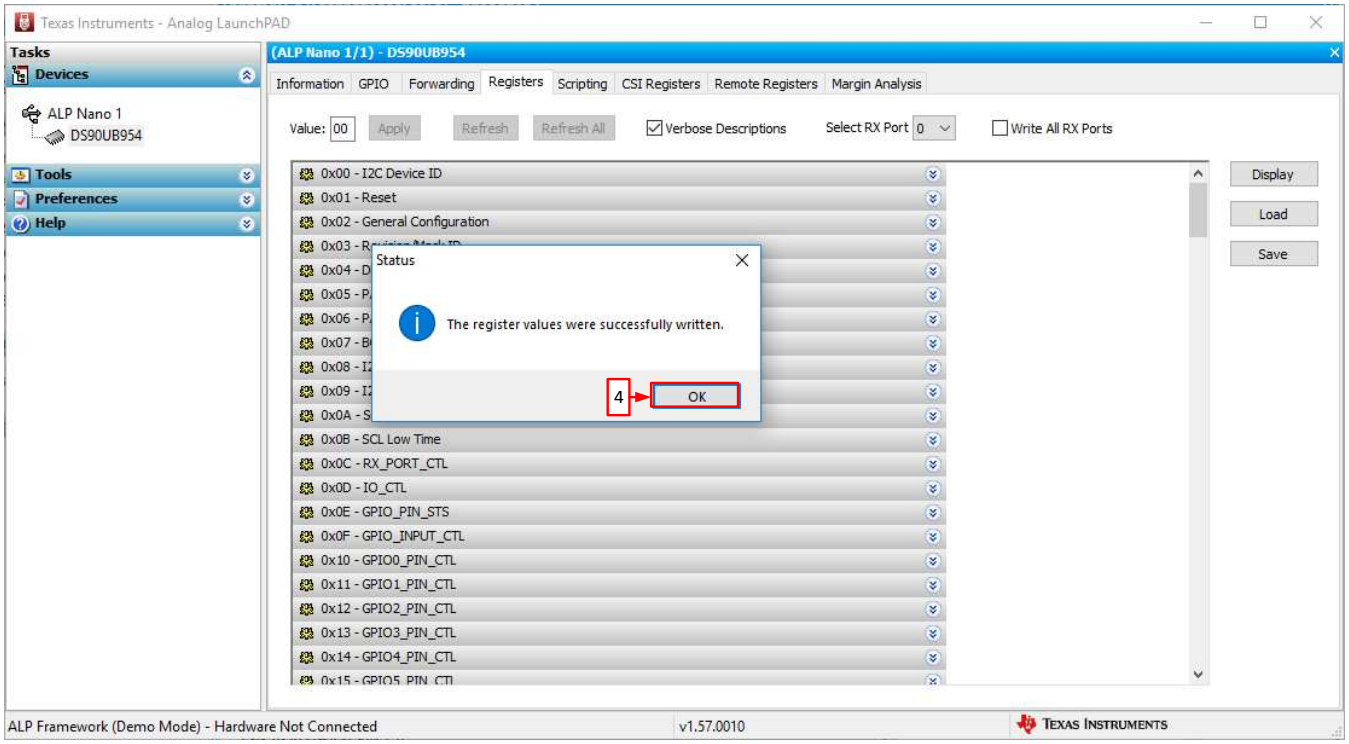

Figure 21. Load Register Settings Step 3

Copyright © 2017–2019, Texas Instruments Incorporated

12.5 Scripting Tab

Figure 22 shows the Scripting tab. The script window provides a full Python scripting environment which can be for running scripts and interacting with the device in an interactive or automated fashion. Commands may be written directly into the Scripting tab or may be run from a .py file using the "Run" button. Example scripts may be found using the "Run PreDef Script" button.

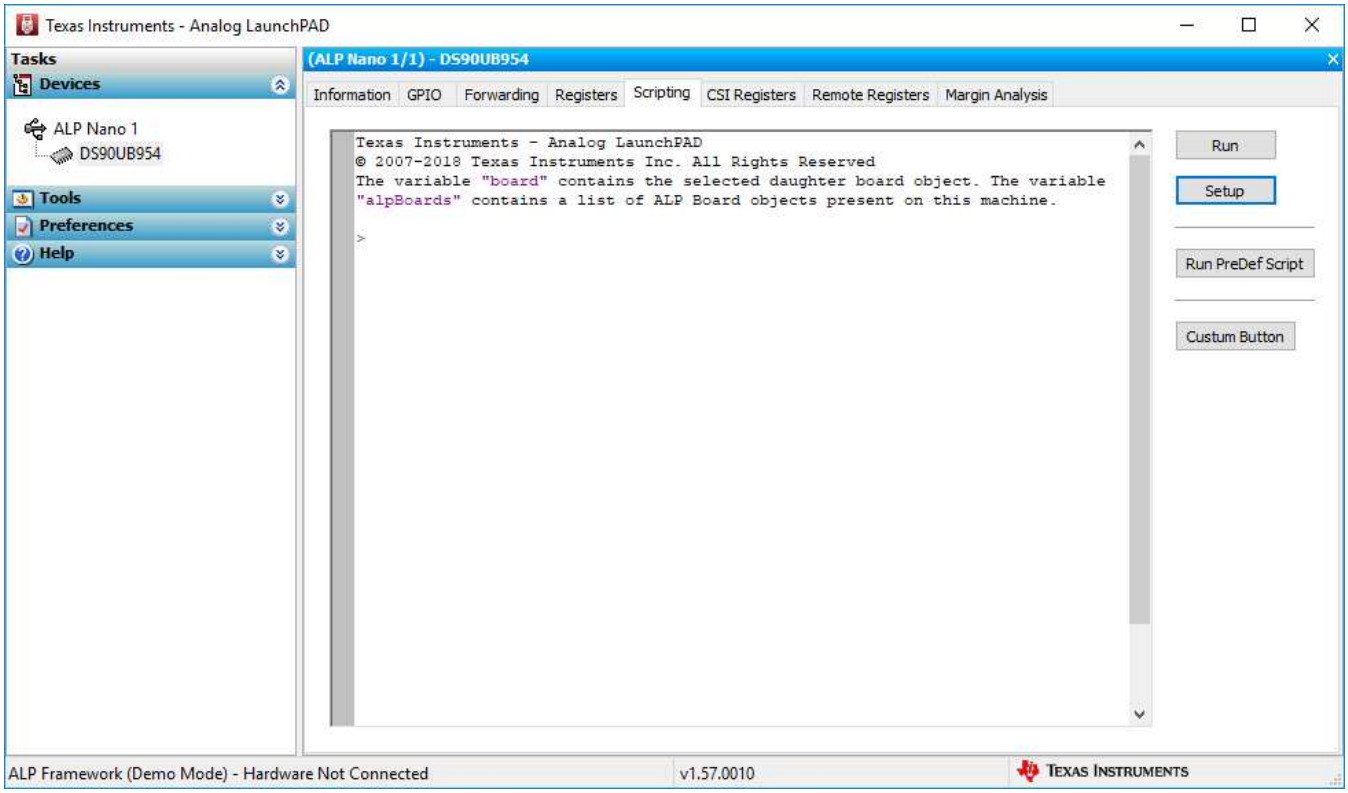

Figure 22. ALP Scripting Tab

Copyright © 2017–2019, Texas Instruments Incorporated

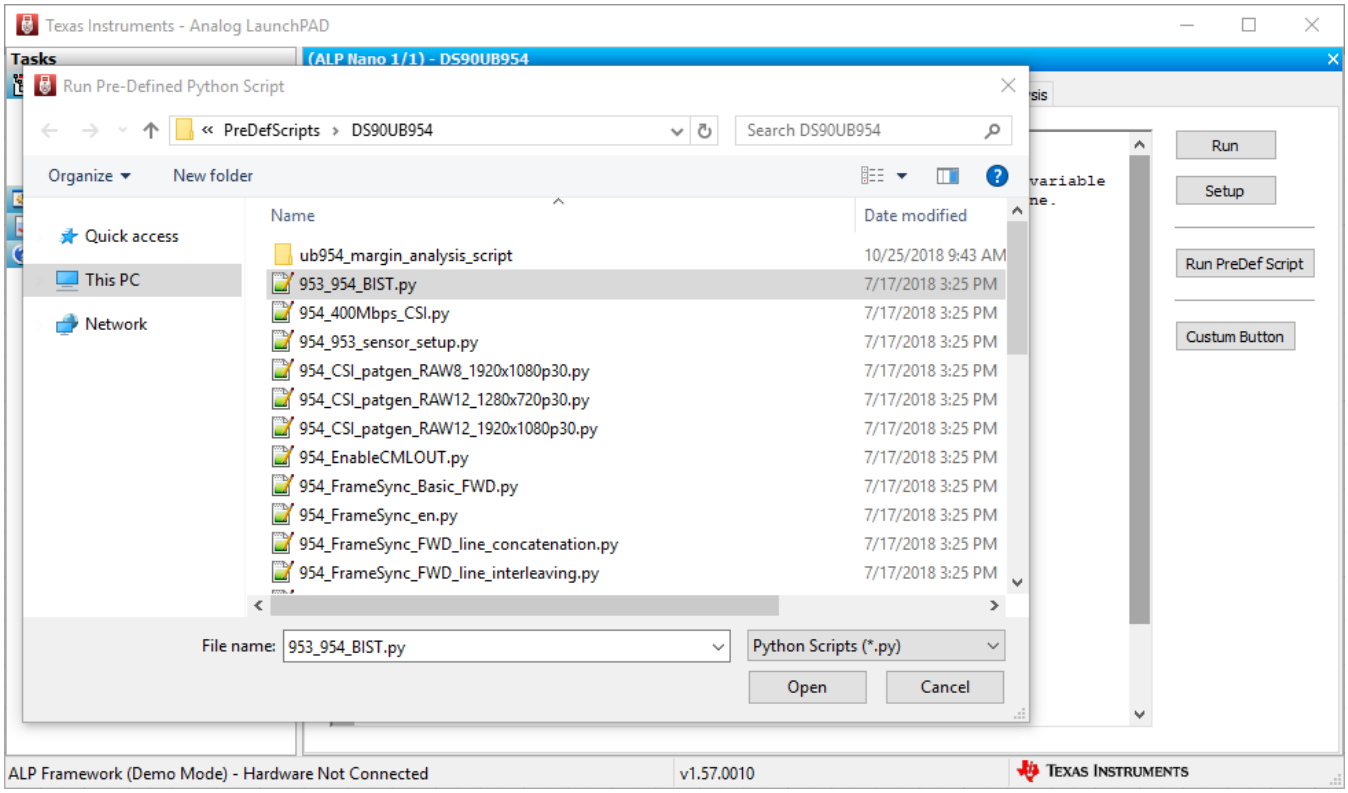

Figure 23. Pre-Defined Scripts

It is also possible to create custom buttons on the Scripting tab to run a desired script. To do so, click on the "Setup" button, then say "Add", and select the desired name and script. To make the button appear in future instances of ALP, click the "Set As Default" button.

Copyright © 2017–2019, Texas Instruments Incorporated

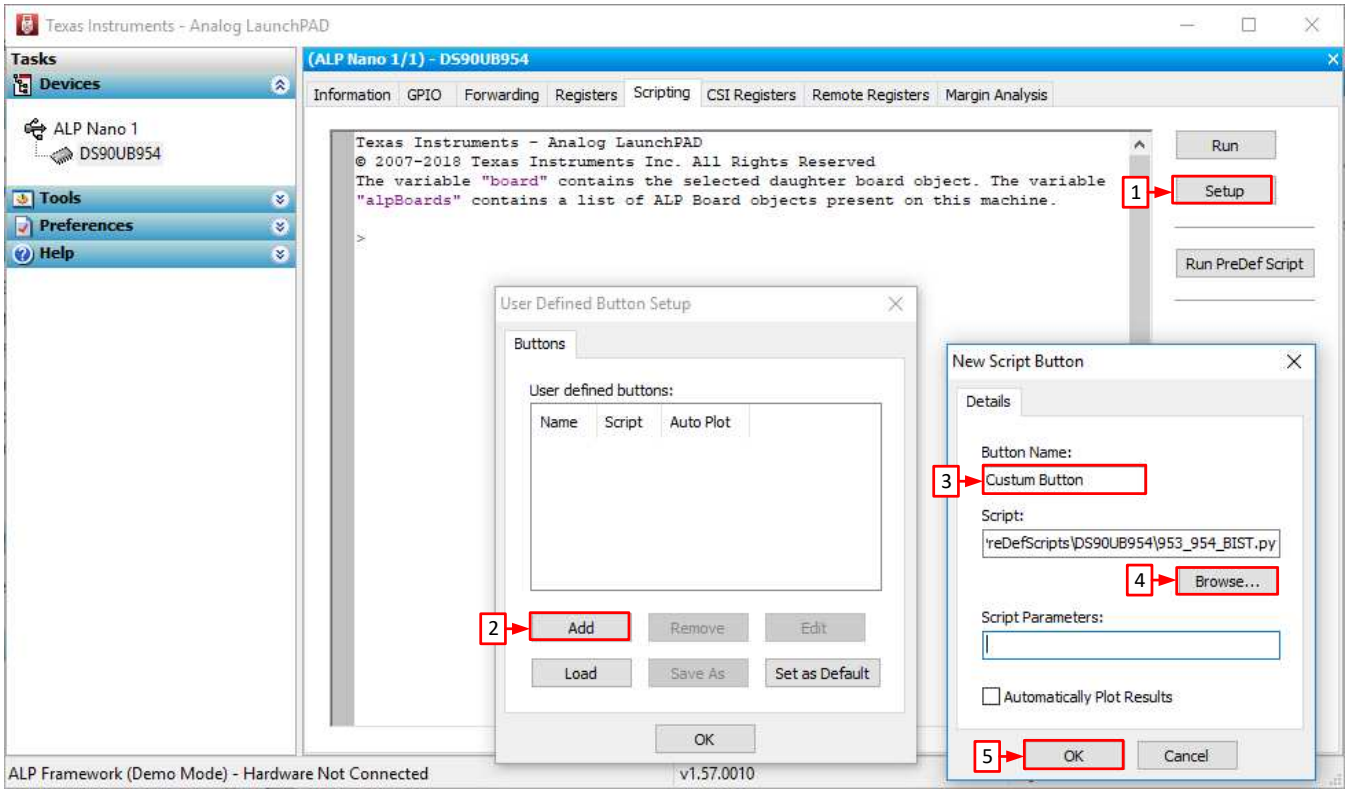

Figure 24. Custom Button Creation Step 1

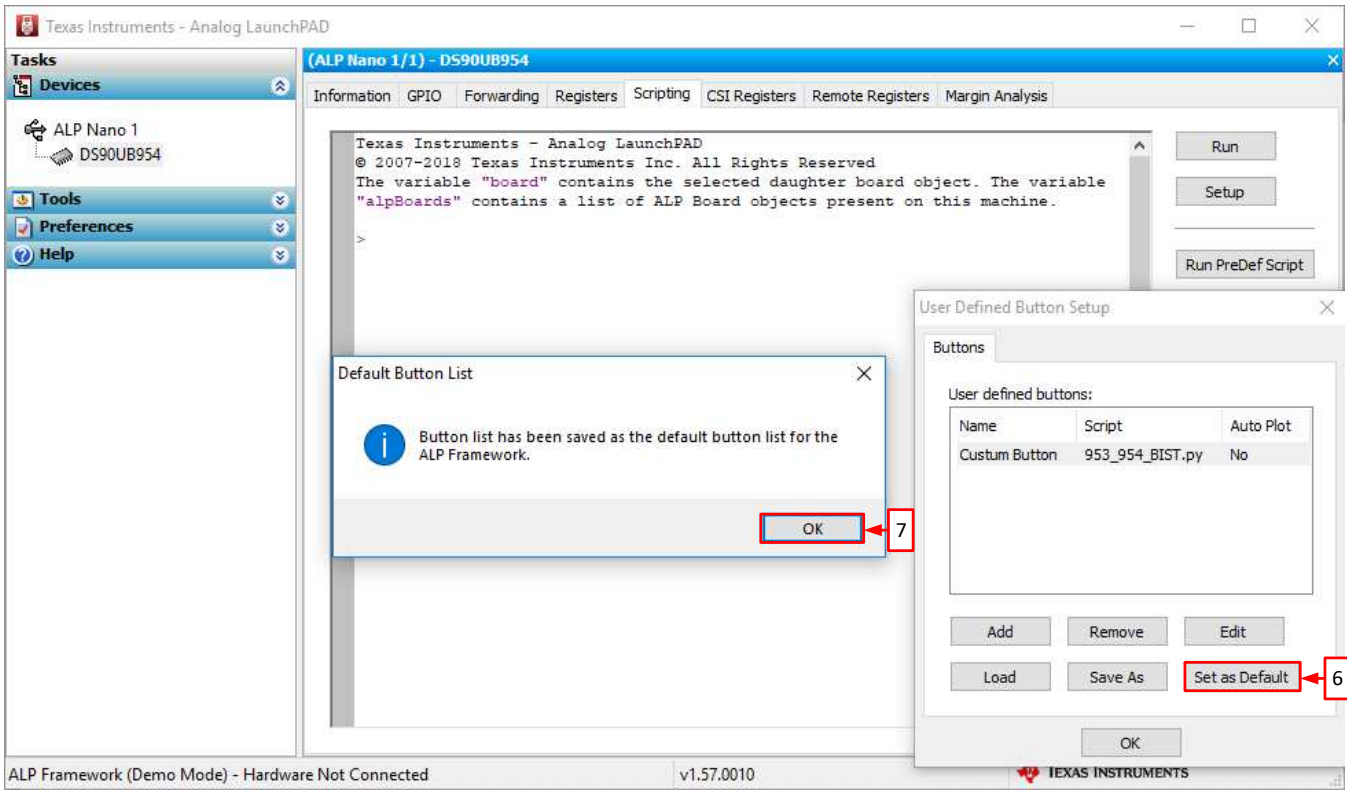

Figure 25. Custom Button Creation Step 2

Copyright © 2017–2019, Texas Instruments Incorporated

WARNING

Directly interacting with devices either through register modifications or calling device support library functions can effect the performance and/or functionality of the user interface and may even crash the ALP Framework application.

12.5.1 Example Functions

The following are Python functions commonly used to interact with FPD-Link devices.

12.5.1.1 Local I2C Reads/Writes

These functions will perform reads and writes only for the I2C assigned to board.devAddr, which by default will be the detected address for the DS90UB95x-Q1.

board.ReadReg(Register Address , # of Bytes) OR board.ReadReg(Register Address)— I2C Read Command

- Accepts both hex & decimal inputs
- Number of bytes will default to 1 if omitted
- Ex: board.ReadReg(0x00) will return the value in Register 0 for the local device

board.WriteReg(Register Address , Data) — I2C Write Command

- Accepts both hex & decimal inputs
- Ex: board.WriteReg(0x01, 0x01) will set Register 0 to have a value of 1

board.devAddr = [I2C Address]— Assigns I2C address to be used for board.ReadReg and board.WriteReg commands

- Accepts both hex & decimal inputs
- Uses the 8-bit form of the I2C address
- Can be used to shorten read/write commands
- Ex: board.devAddress = 0x60 sets the board address to 0x60

12.5.1.2 General I2C Reads/Writes:

These I2C commands will work for any I2C address on the local bus and remote devices configured in the slave ID and slave alias registers of the device. The 8-bit form of I2C addresses should be used.

board.ReadI2C(Device Address, Register Address , # of Bytes) OR board.ReadI2C(Device Address, Register Address) — I2C Read Command

- Accepts both hex & decimal inputs
- Number of bytes will default to 1 if omitted
- Ex: board.ReadI2C(0x60, 0x00) will return the value in Register 0 for the device with address 0x60 (8-bit form)

board.WriteI2C(Device Address, Register Address , Data) — I2C Write Command

- Accepts both hex & decimal inputs
- Ex: board.WriteI2C(0x60, 0x01, 0x01) will set Register 1 of the device with address 0x60 (8-bit form) to have a value of 1

12.5.1.3 I2C Reads/Writes with Multi-Byte Register Addresses

These I2C commands will work for any I2C address on the local bus and remote devices configured in the slave ID and slave alias registers of the device. The 8-bit form of I2C addresses should be used.

Copyright © 2017–2019, Texas Instruments Incorporated

board.ReadI2C(Device Address, Register Address Byte 2,[Register Address Byte 1, # of Bytes]) OR board.ReadI2C(Device Address, Register Address Byte 2, [Register Address Byte 1]) — I2C Read Command for devices with multi-byte register addresses

- Accepts both hex & decimal inputs
- Number of bytes will default to 1 if omitted
- Ex: board.ReadI2C(0x60, 0x30, [0x00]) will return the value in Register 0x3000 for the device with address 0x60 (8-bit form)

board.WriteI2C(Device Address, Register Address Byte 2, [Register Address Byte 1, Data])— I2C Write Command for devices with multi-byte register addresses

- Accepts both hex & decimal inputs
- Number of bytes will default to 1 if omitted
- • Ex: board.WriteI2C(0x60, 0x30, [0x01, 0x01]) will set Register 0x3000 of the device with address 0x60 (8-bit form) to have a value of 1

Copyright © 2017–2019, Texas Instruments Incorporated

12.6 GPIO Tab

Figure 26 shows the GPIO tab. This tab may be used to configure the DS90UB95x-Q1 GPIO pins, including the configuration of back channel GPIOs, and FrameSync generation.

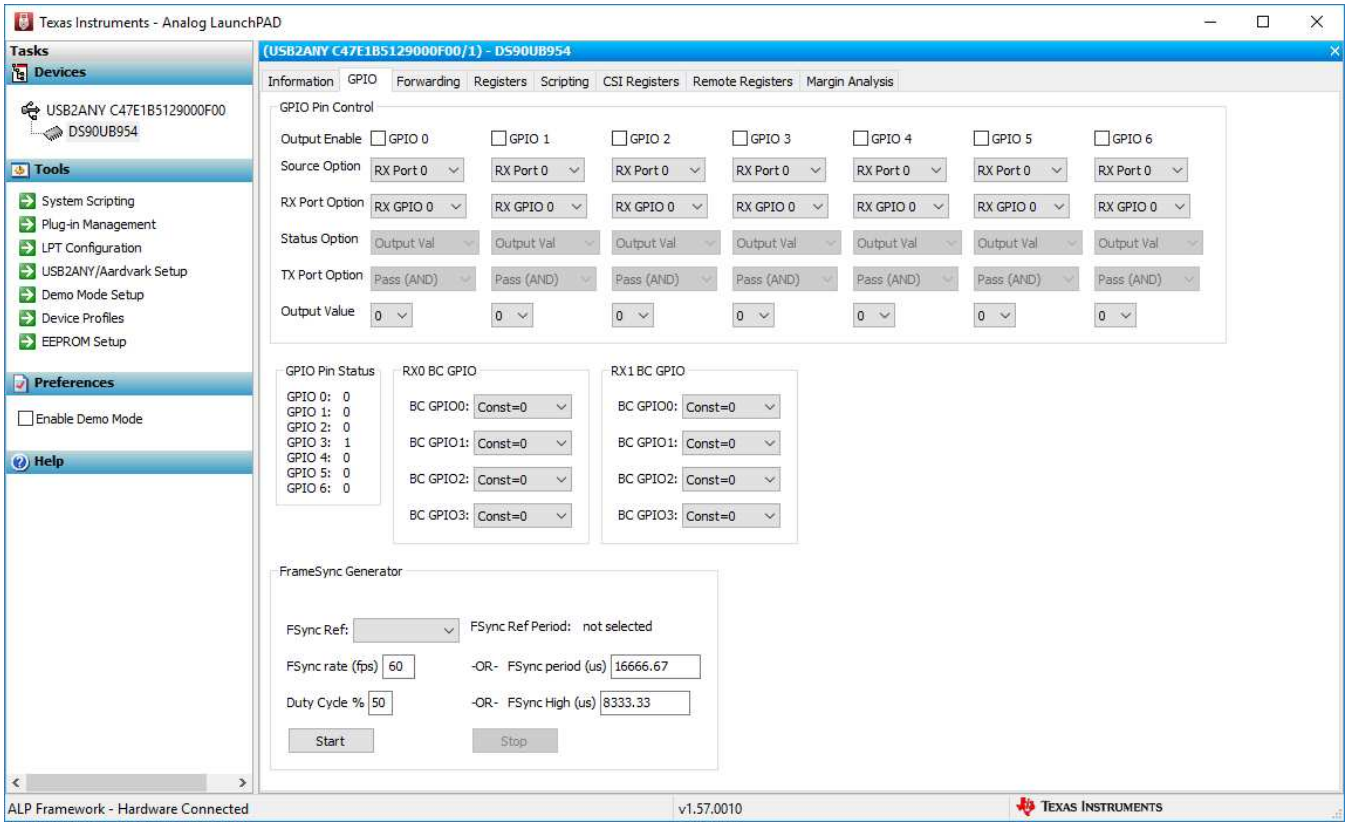

Figure 26. GPIO Tab

Copyright © 2017–2019, Texas Instruments Incorporated

12.7 Forwarding Tab

Figure 27 shows the Forwarding tab. This tab may be used to configure the forwarding of CSI-2 data.

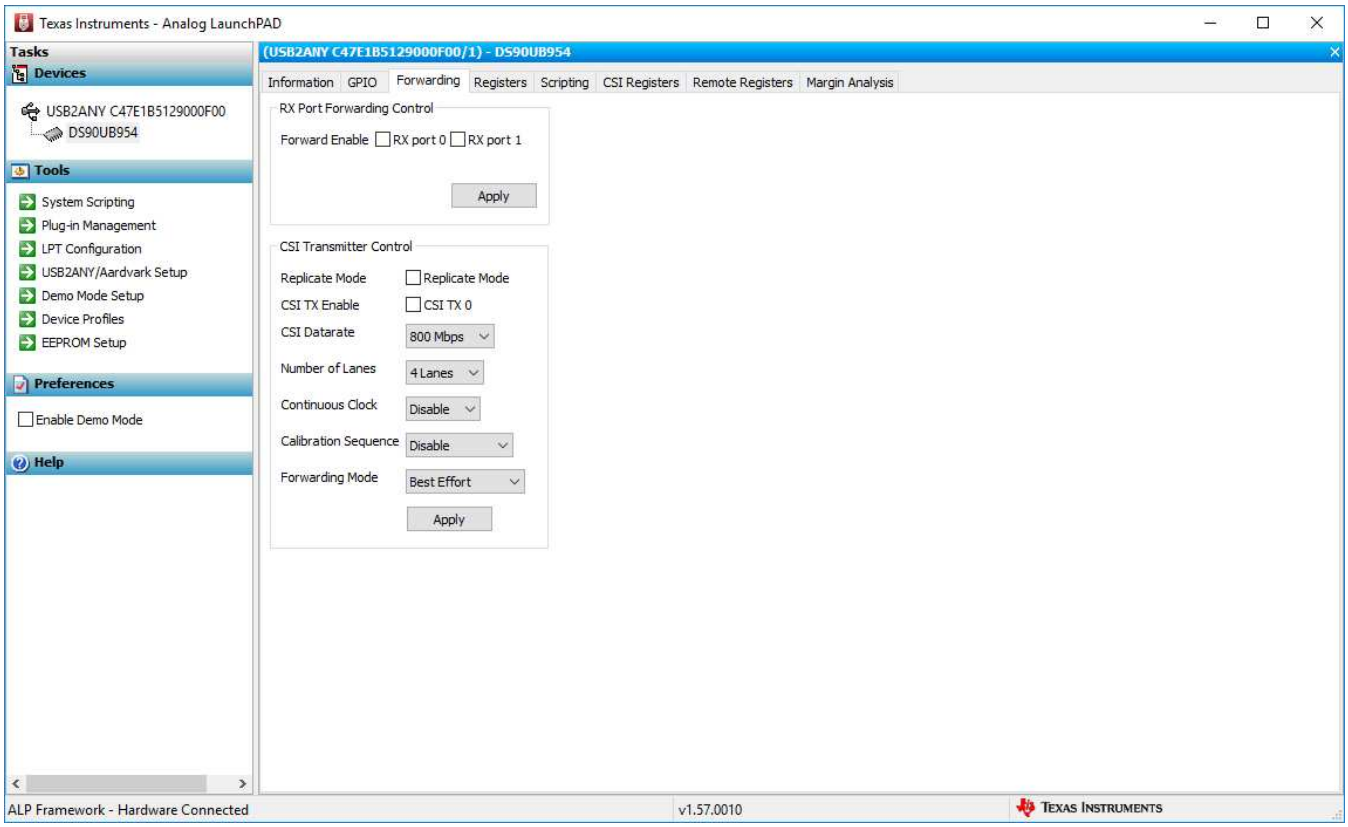

Figure 27. Forwarding Tab

Copyright © 2017–2019, Texas Instruments Incorporated

12.8 CSI Registers Tab

Figure 28 shows the CSI Registers tab. This tab operates in the same way as the Registers tab, but holds the indirect access registers used to configure pattern generation.

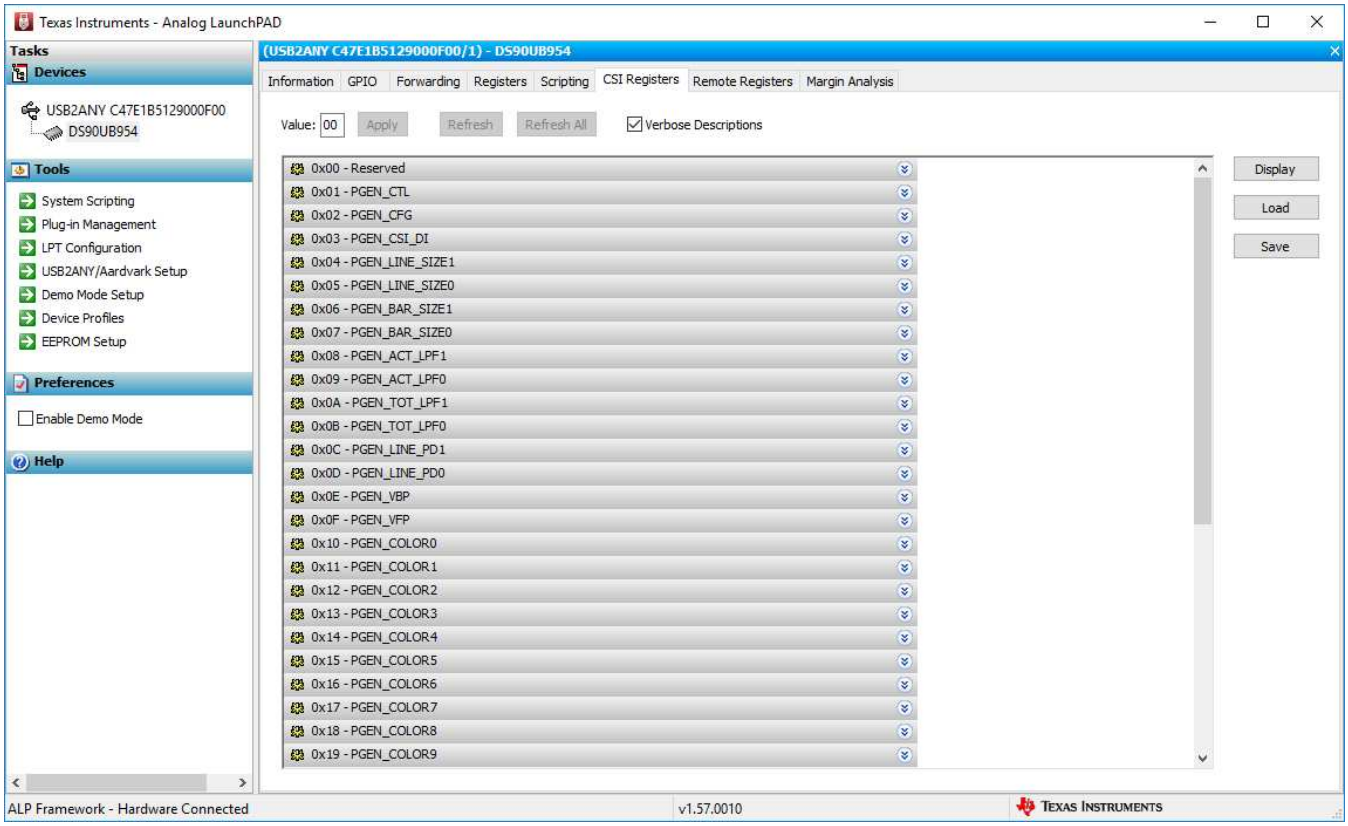

Figure 28. CSI Registers Tab

Copyright © 2017–2019, Texas Instruments Incorporated

12.9 Remote Registers Tab

Figure 29 shows the Remote Registers tab. This tab may be used to read and write to the registers of the partner serializer. The RX Port selection drop-down controls which serializer is communicated with, the serializer connect to Port 0 or the serializer connected to Port 1.

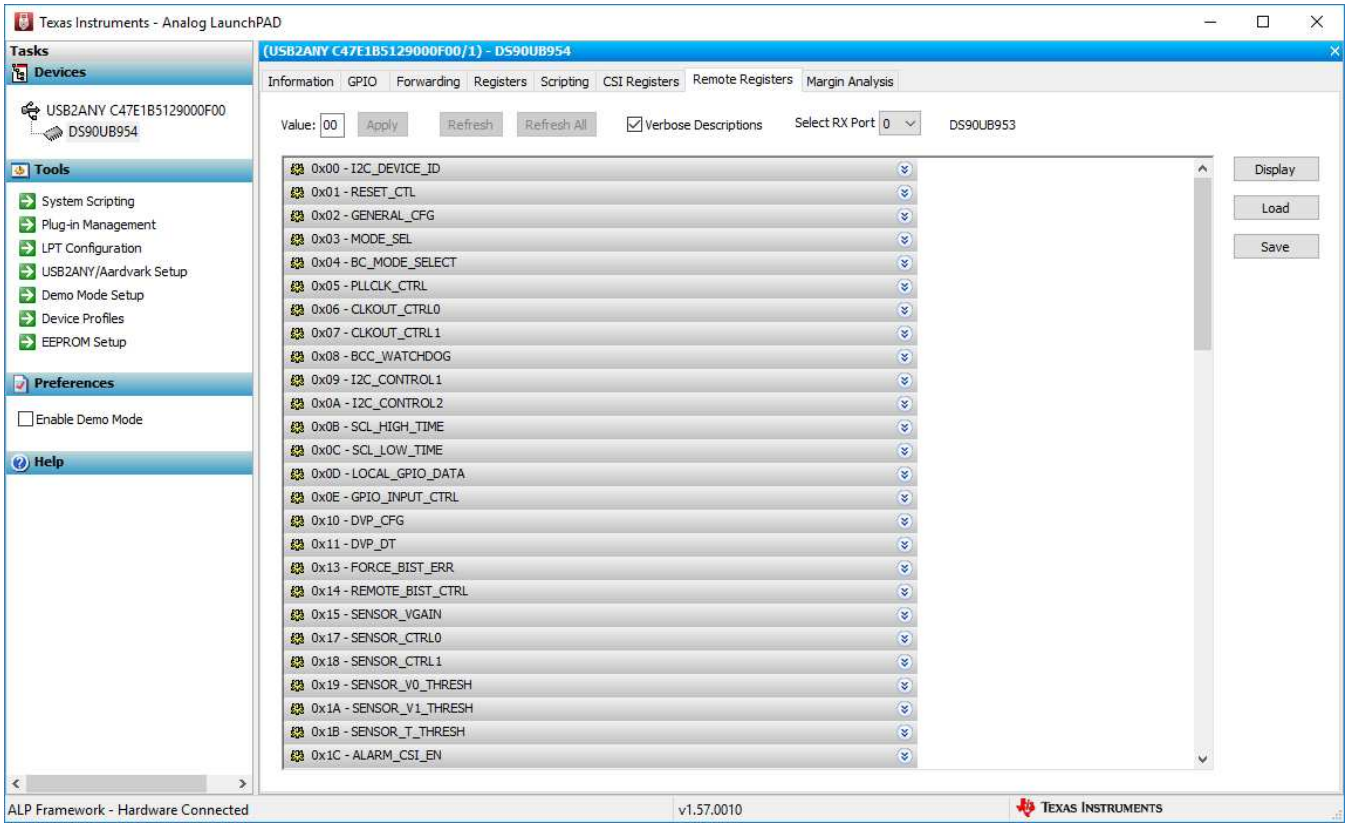

Figure 29. Remote Registers Tab

Copyright © 2017–2019, Texas Instruments Incorporated

13 Troubleshooting ALP Software

13.1 ALP Does Not Detect The EVM

If the following window opens after starting the ALP software, double check the hardware setup.

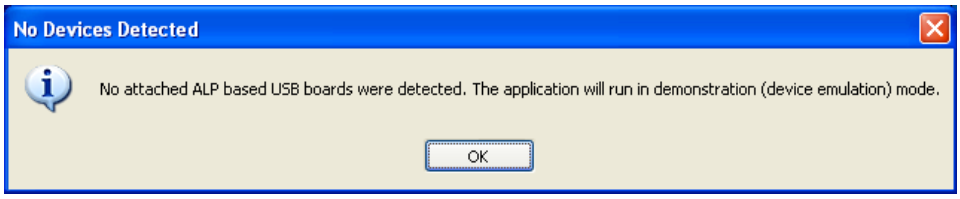

Figure 30. ALP No Devices Error

It may also be that the USB2ANY driver is not installed. Check the device manager. There should be a "HID-compliant device" under the "Human Interface Devices" as shown in Figure 31.

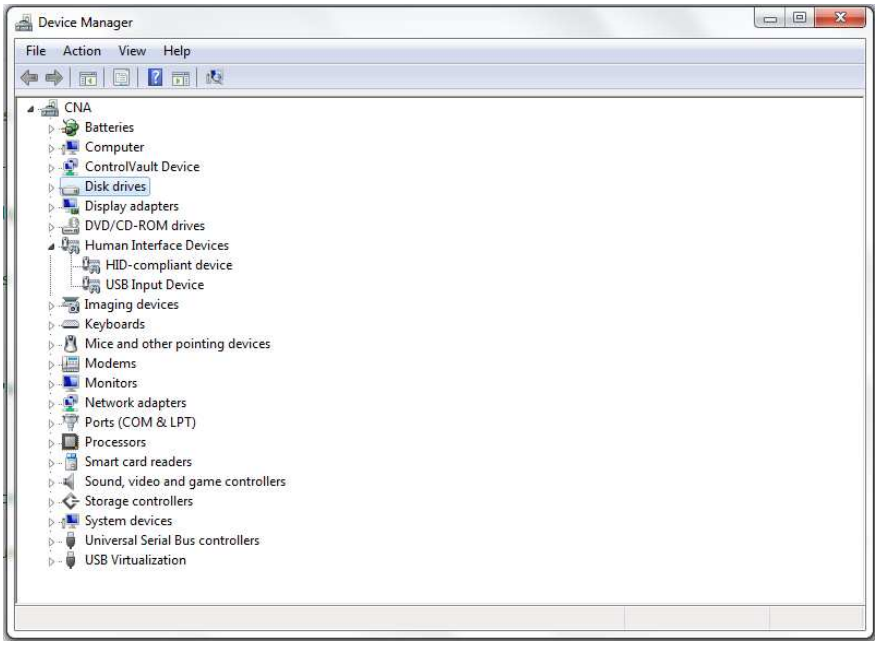

Figure 31. Windows 7, ALP USB2ANY Driver

The software should start with only "DS90UB95x" in the "Devices" pull down menu. If there are more devices then the software is most likely in demo mode. When the ALP is operating in demo mode there is a "(Demo Mode)" indication in the lower left of the application status bar as shown in Figure 32.

Copyright © 2017–2019, Texas Instruments Incorporated

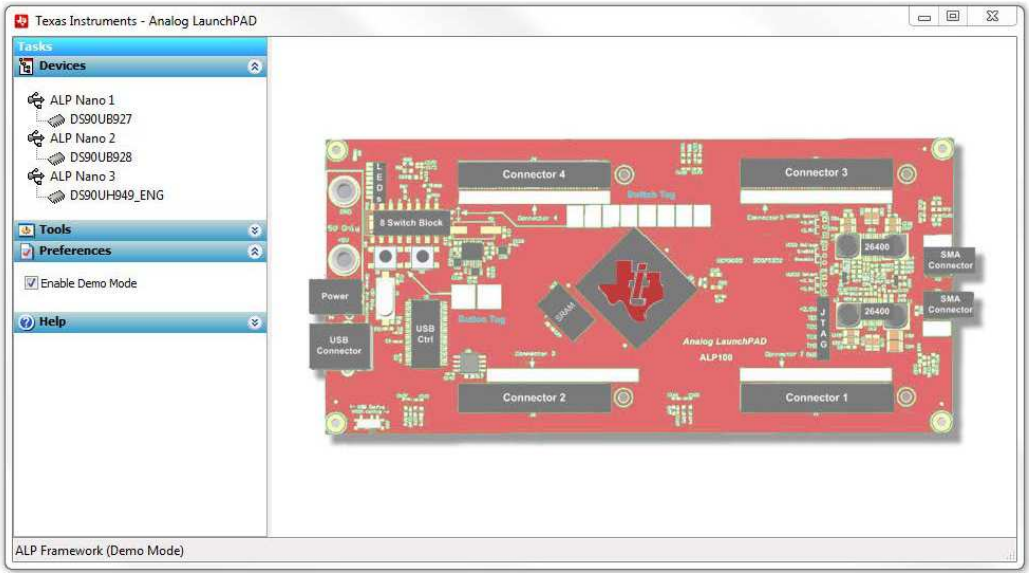

Figure 32. ALP in Demo Mode

Disable the demo mode by selecting the “Preferences” pull down menu and un-checking “Enable Demo Mode”.

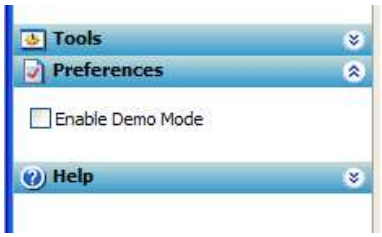

Figure 33. ALP Preferences Menu

After demo mode is disabled, the ALP software will poll the ALP hardware. The ALP software will update and have only “DS90UB95x” under the “Devices” pull down menu.

13.2 USB2ANY Firmware Issues

If upon plugging in the board to the PC, the user is presented with a message stating USB2ANY firmware is out of date or is 0.0.0.0, similar to Figure 34, try unplugging the USB cable and plugging it in again (holding S1 while plugging in the USB cable puts the USB2ANY into firmware update mode). If that does not solve the problem you will have to re-flash the on-board USB2ANY firmware. To re-flash the USB2ANY, download USB2ANY Explorer USB2ANY Explorer Installer v2.7.0.0 and install the application. Launch the USB2ANY Firmware Loader available at "C:\Program Files (x86)\TI USB2ANY SDK\bin\USB2ANY Firmware Loader.exe" and follow the instructions to flash the latest version of USB2ANY firmware. The firmware loading screen is shown in Figure 35.

Copyright © 2017–2019, Texas Instruments Incorporated

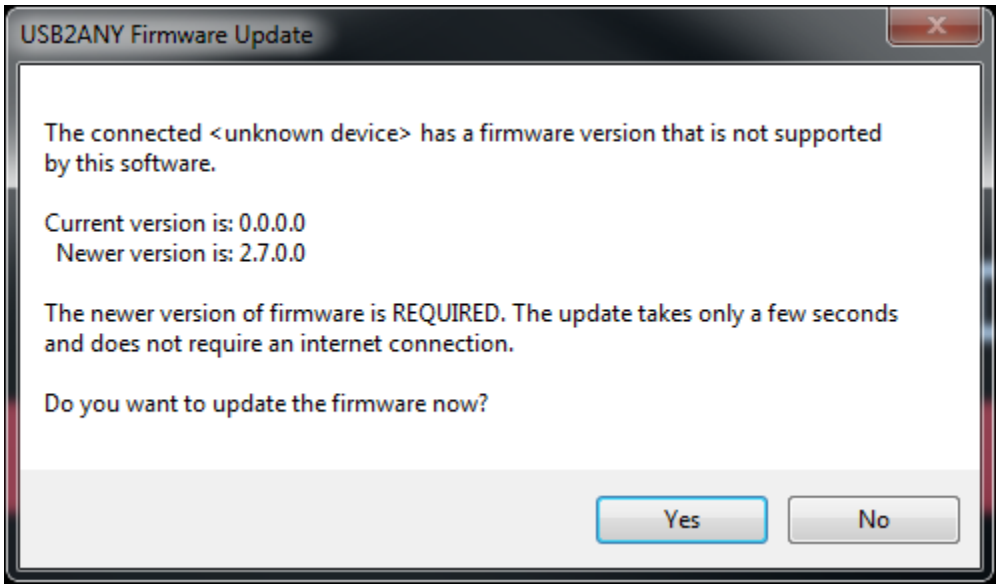

Figure 34. USB2ANY Firmware Update Notice

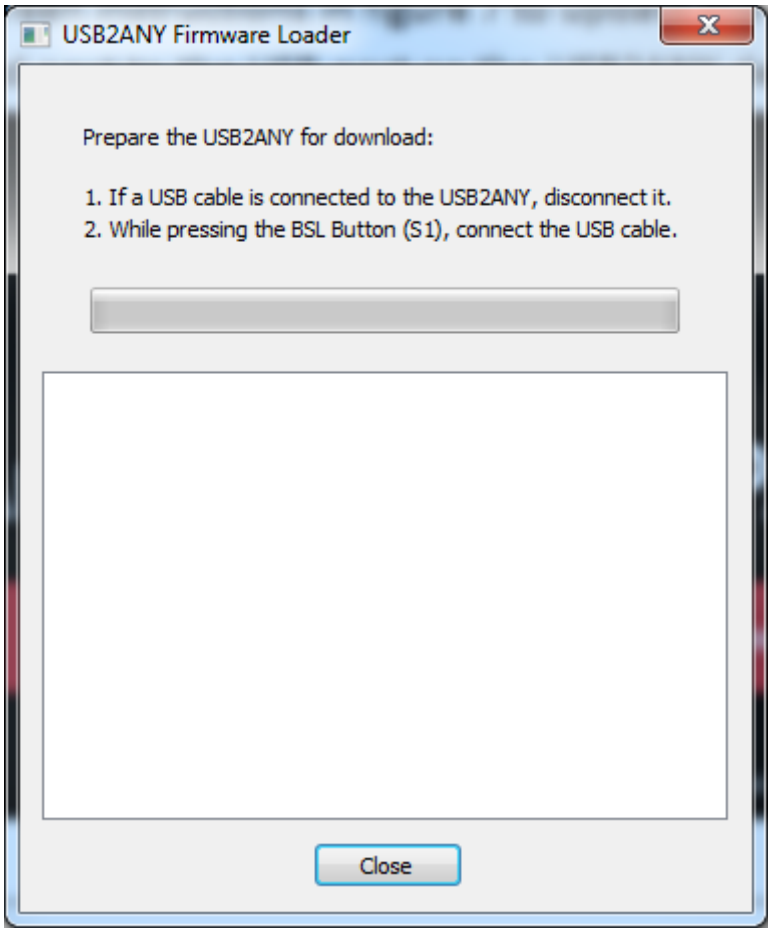

Figure 35. USB2ANY Firmware Update Procedure

Copyright © 2017–2019, Texas Instruments Incorporated

14 DS90UB95x-Q1EVM PCB Schematics, Layout and Bill of Materials - DS90UB95x-Q1EVM Schematic

Revision History				
Rev	ECN #	Approved Date	Approved by	Notes
N/A	N/A	N/A	N/A	N/A

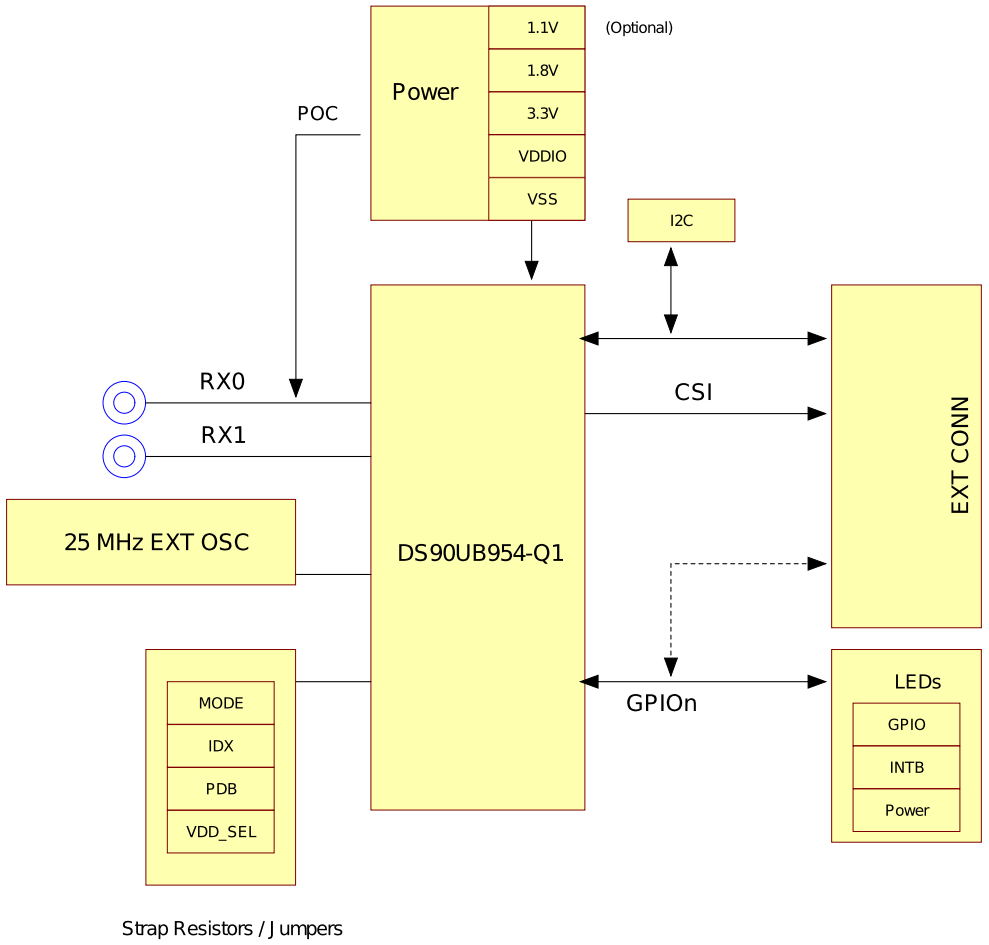

Copyright © 2017, Texas Instruments Incorporated

Figure 36. DS90UB95x-Q1EVM Block Diagram

Copyright © 2017–2019, Texas Instruments Incorporated

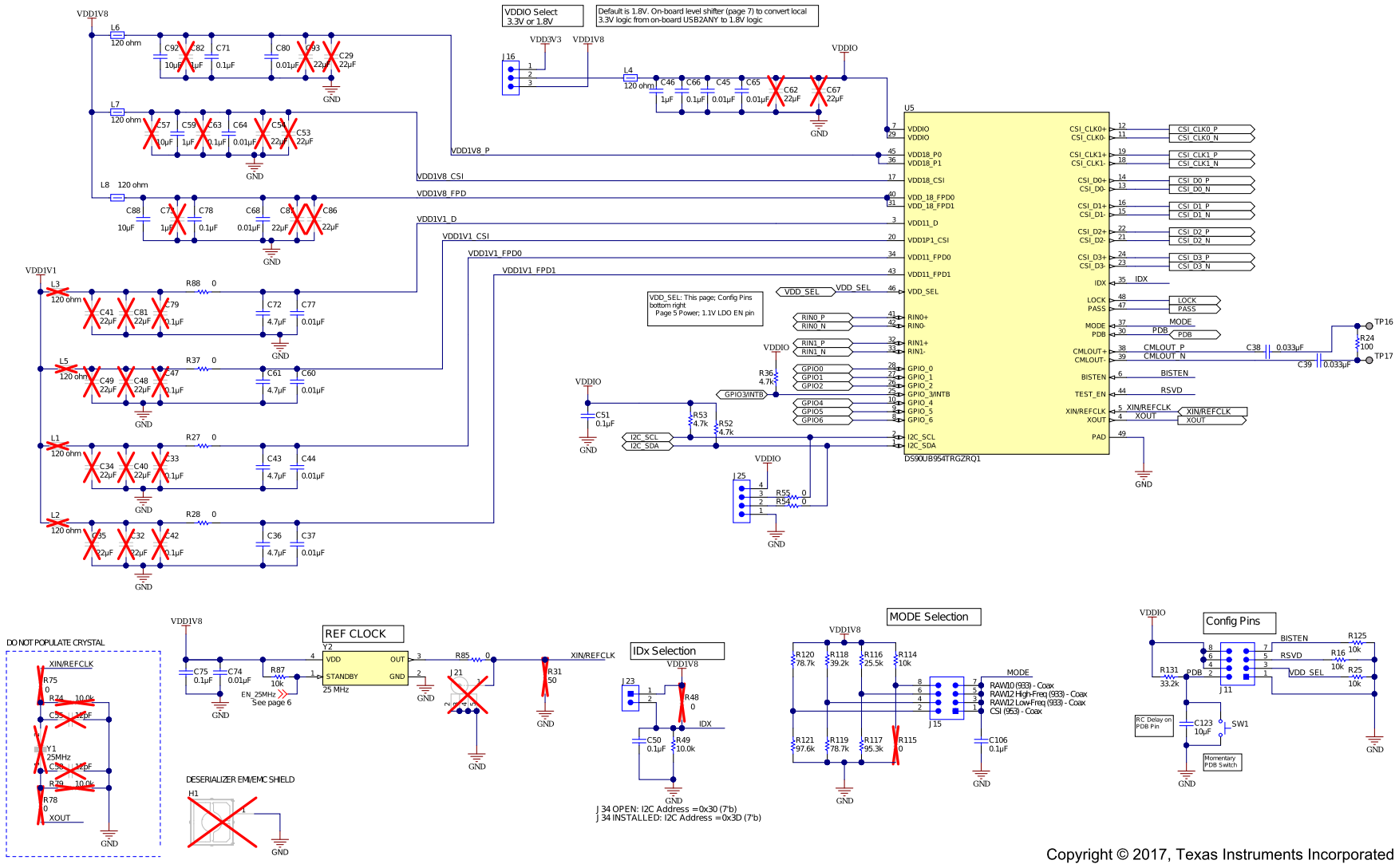

Figure 37. DS90UB95x-Q1EVM Main Circuit - Page 1

Copyright © 2017–2019, Texas Instruments Incorporated

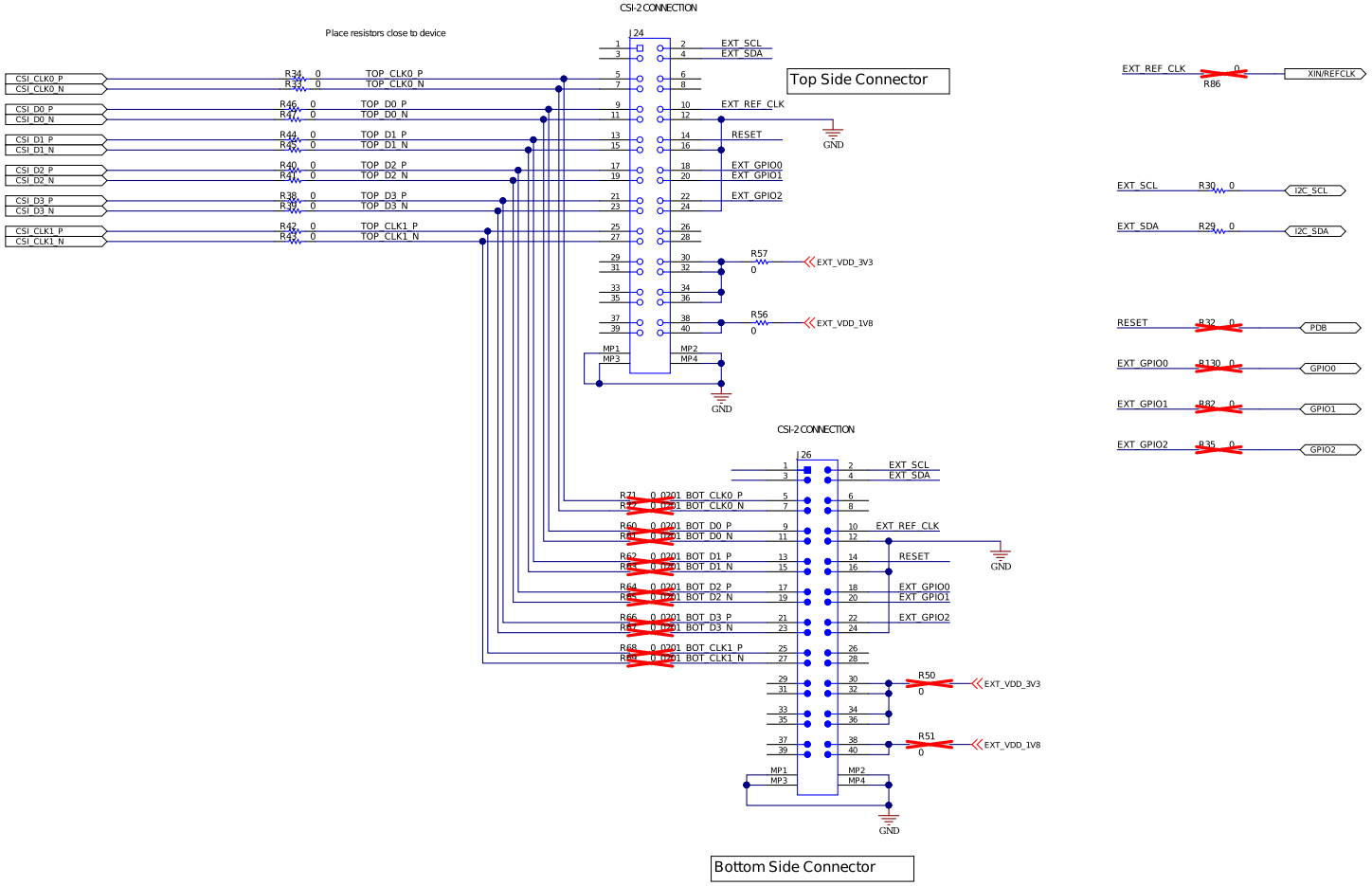

Copyright © 2017, Texas Instruments Incorporated

Figure 38. DS90UB95x-Q1EVM CSI-2 Connectors - Page 2

Copyright © 2017–2019, Texas Instruments Incorporated

Power over Coax (POC)

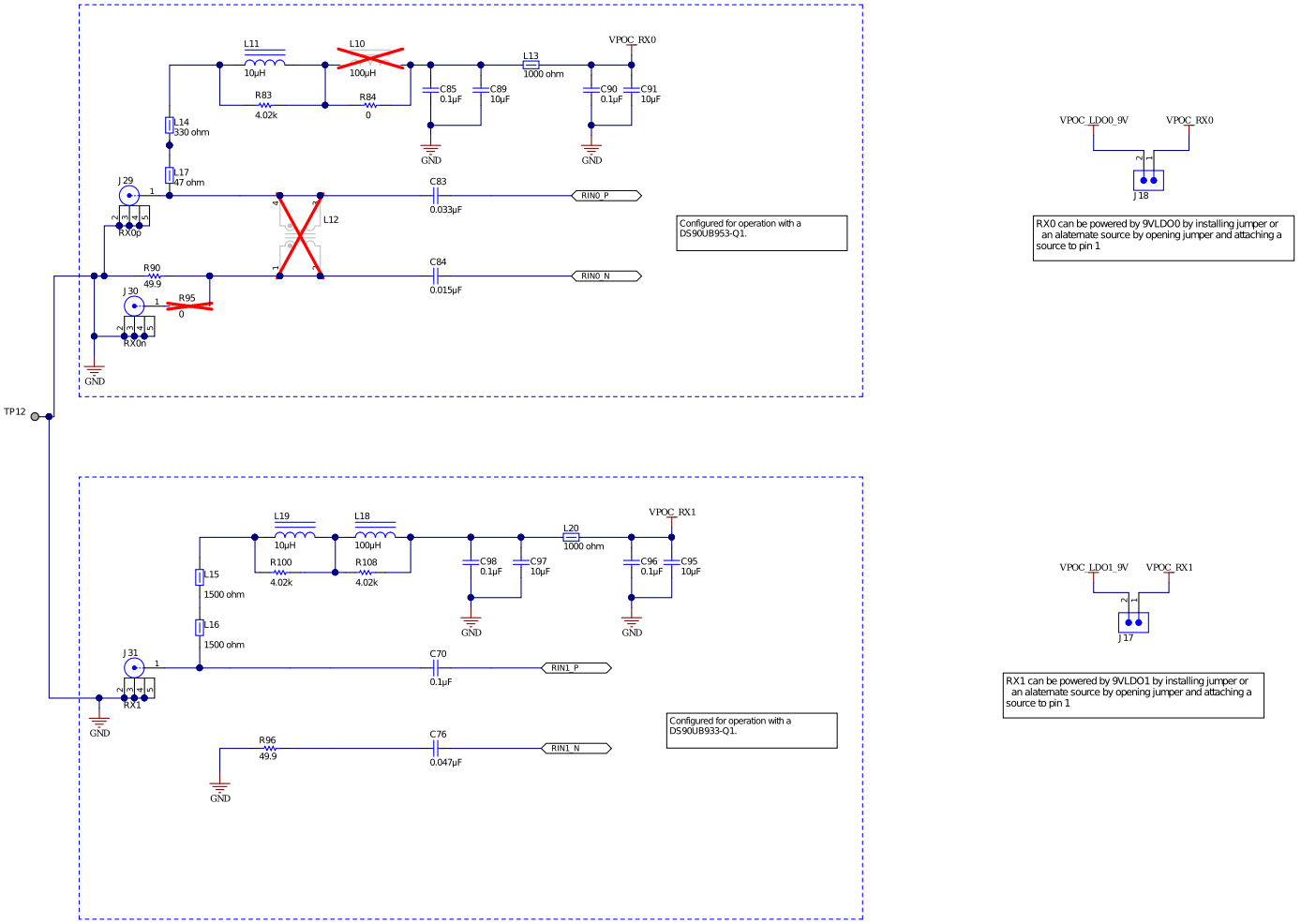

Copyright © 2017, Texas Instruments Incorporated

Figure 39. DS90UB95x-Q1EVM PoC Circuits - Page 3

Copyright © 2017–2019, Texas Instruments Incorporated

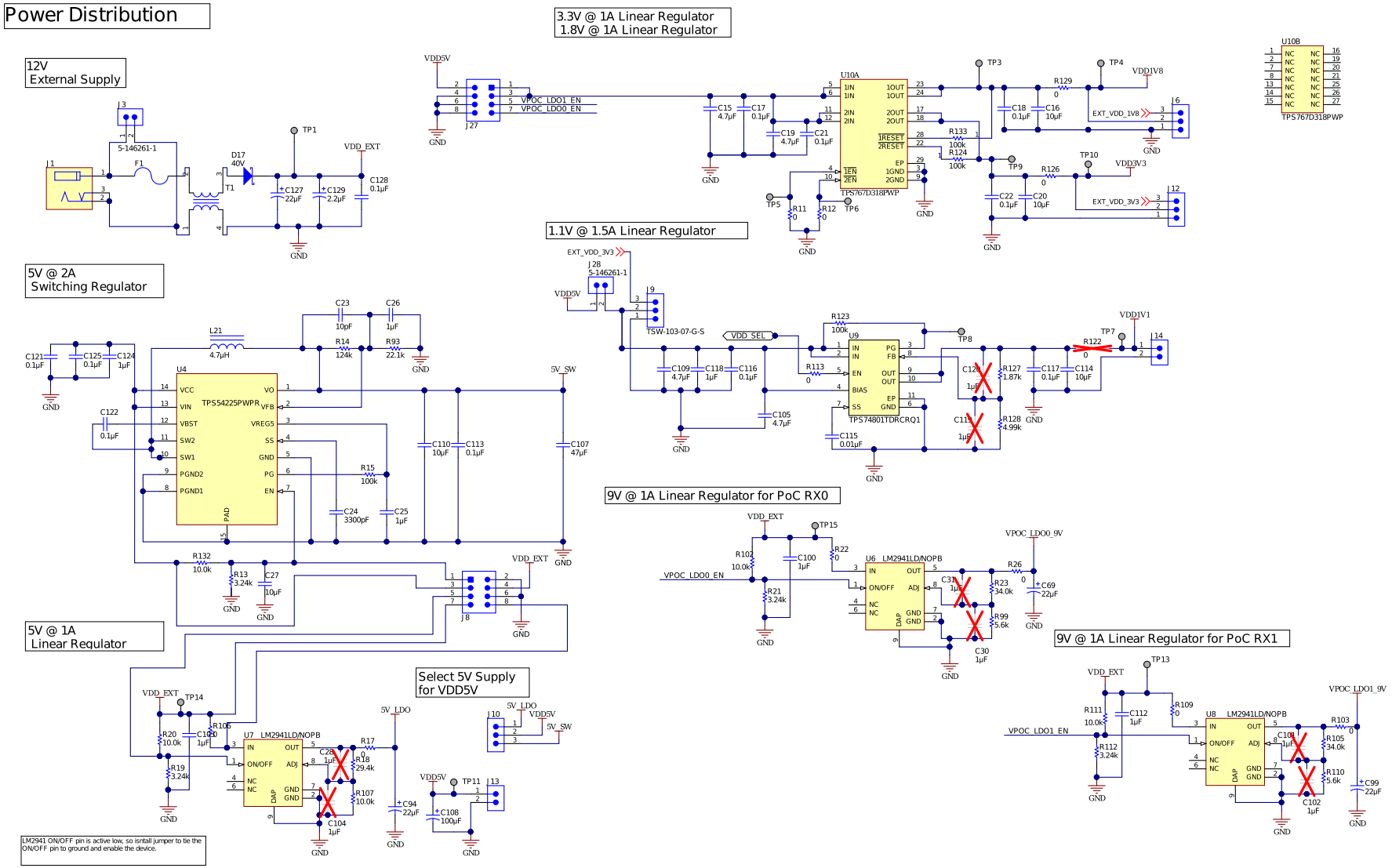

Copyright © 2017, Texas Instruments Incorporated

Figure 40. DS90UB95x-Q1EVM Power Distribution Circuits - Page 4

Copyright © 2017–2019, Texas Instruments Incorporated

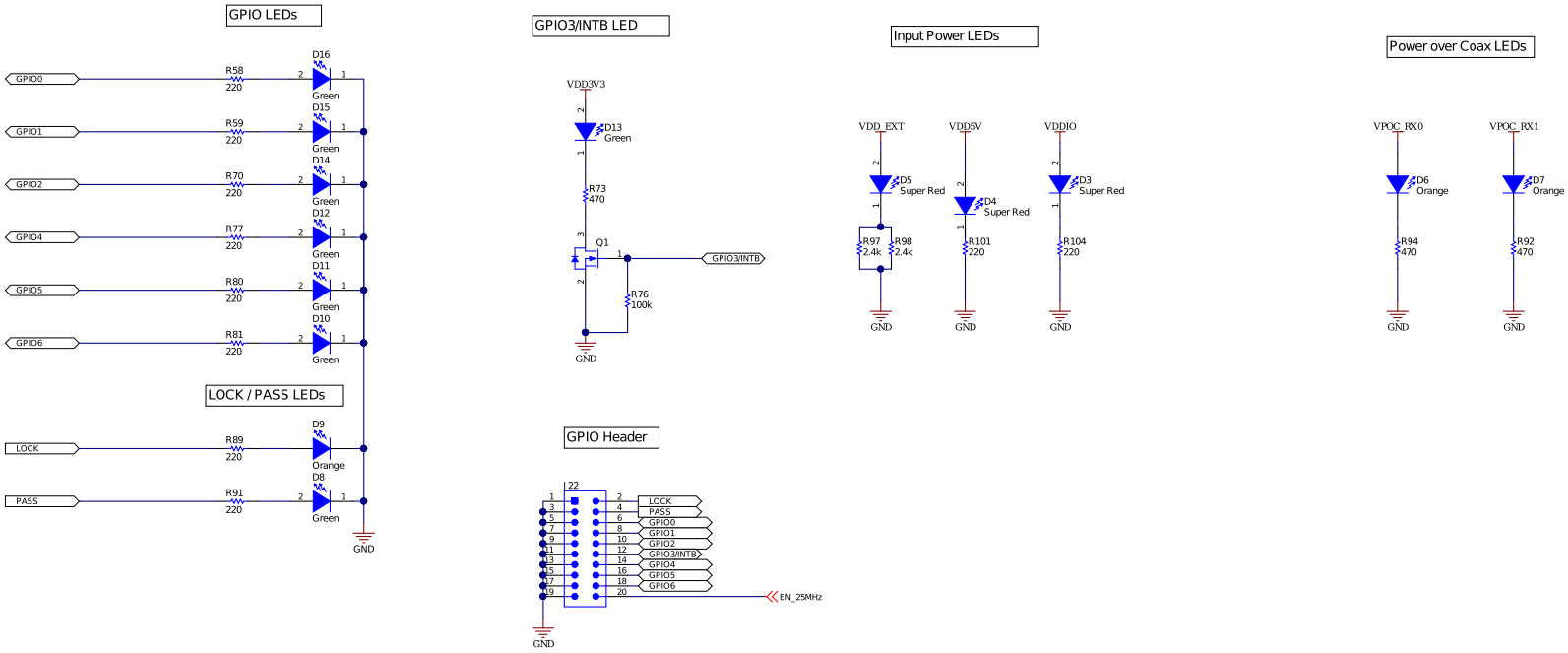

Copyright © 2017, Texas Instruments Incorporated

Figure 41. DS90UB95x-Q1EVM LED Circuits - Page 5

Copyright © 2017–2019, Texas Instruments Incorporated

On-Board USB2ANY

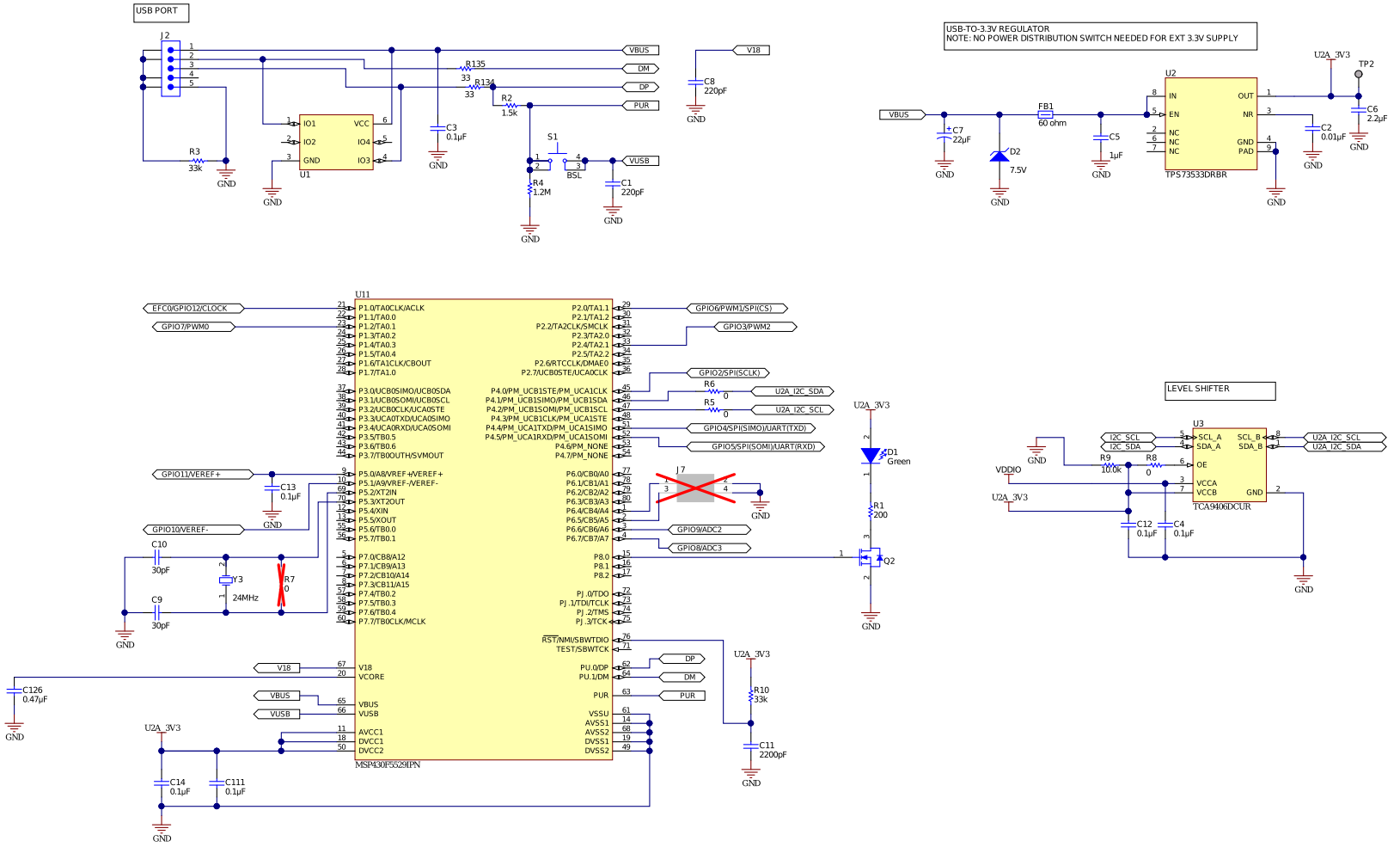

Copyright © 2017, Texas Instruments Incorporated

Figure 42. DS90UB95x-Q1EVM USB2ANY Circuits - Page 6

Copyright © 2017–2019, Texas Instruments Incorporated

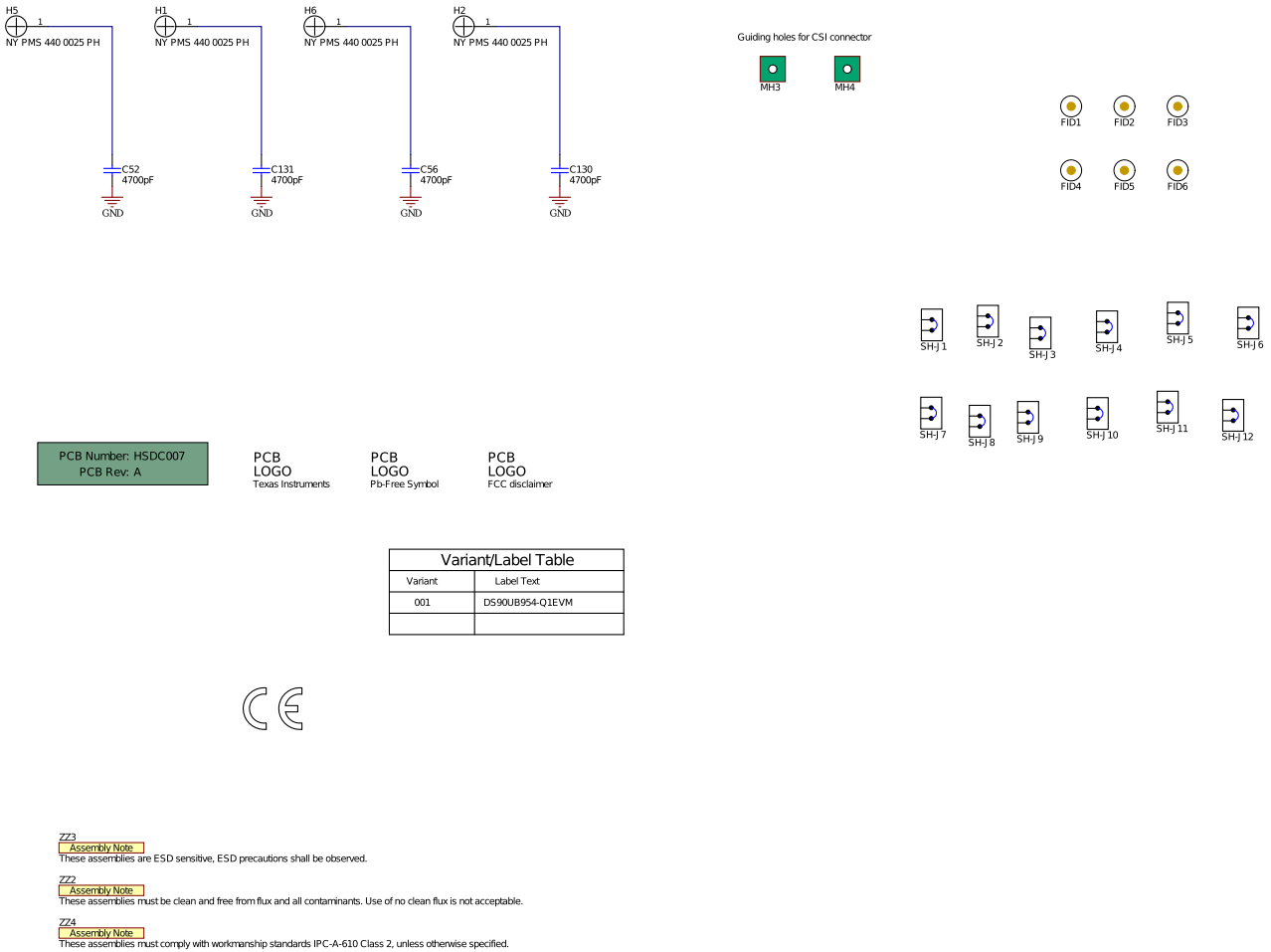

Copyright © 2017, Texas Instruments Incorporated

Figure 43. DS90UB95x-Q1EVM Miscellaneous Hardware

Copyright © 2017–2019, Texas Instruments Incorporated

15 DS90UB95x-Q1 EVM PCB Layout

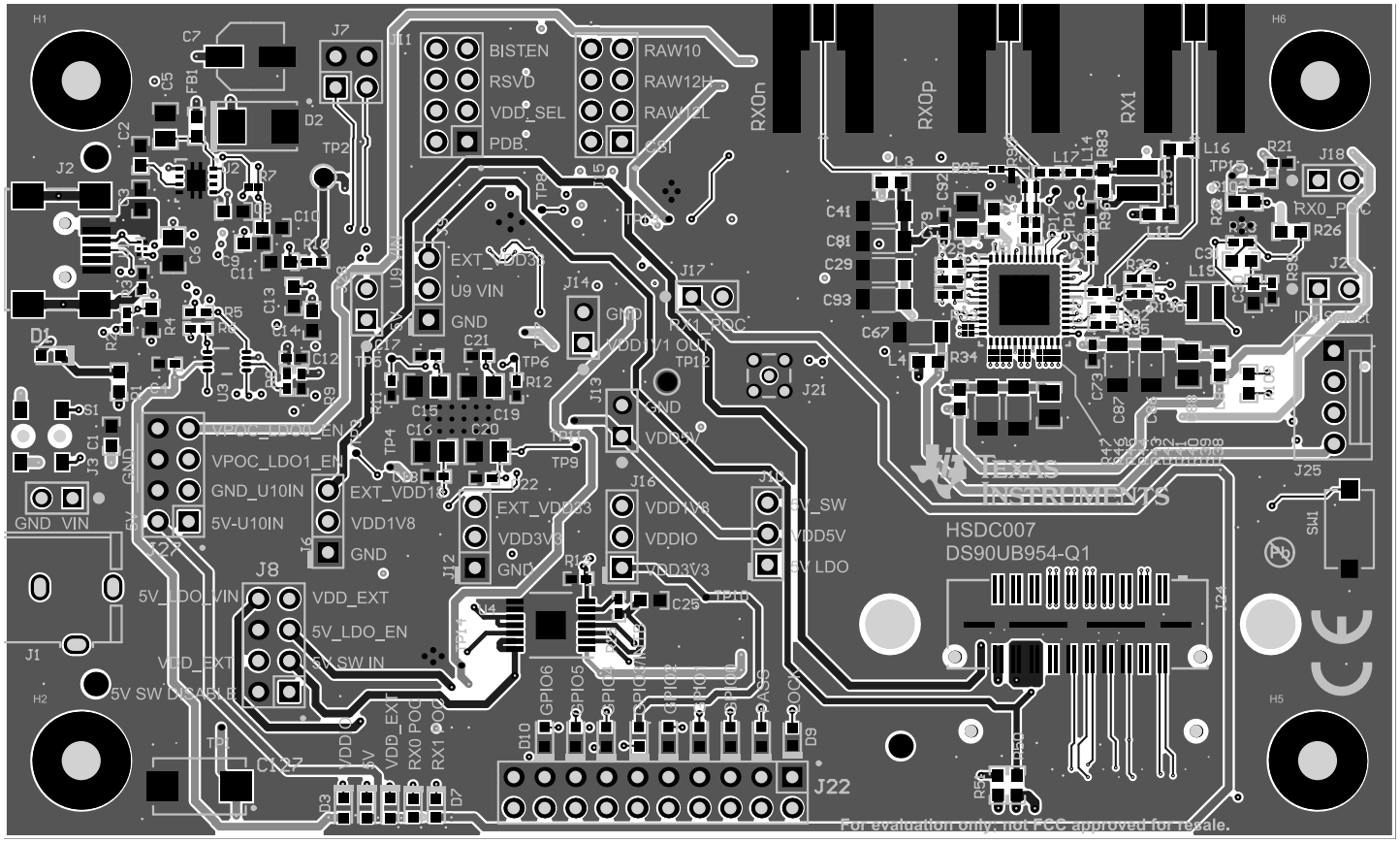

Figure 44. Top View Composite

Copyright © 2017–2019, Texas Instruments Incorporated

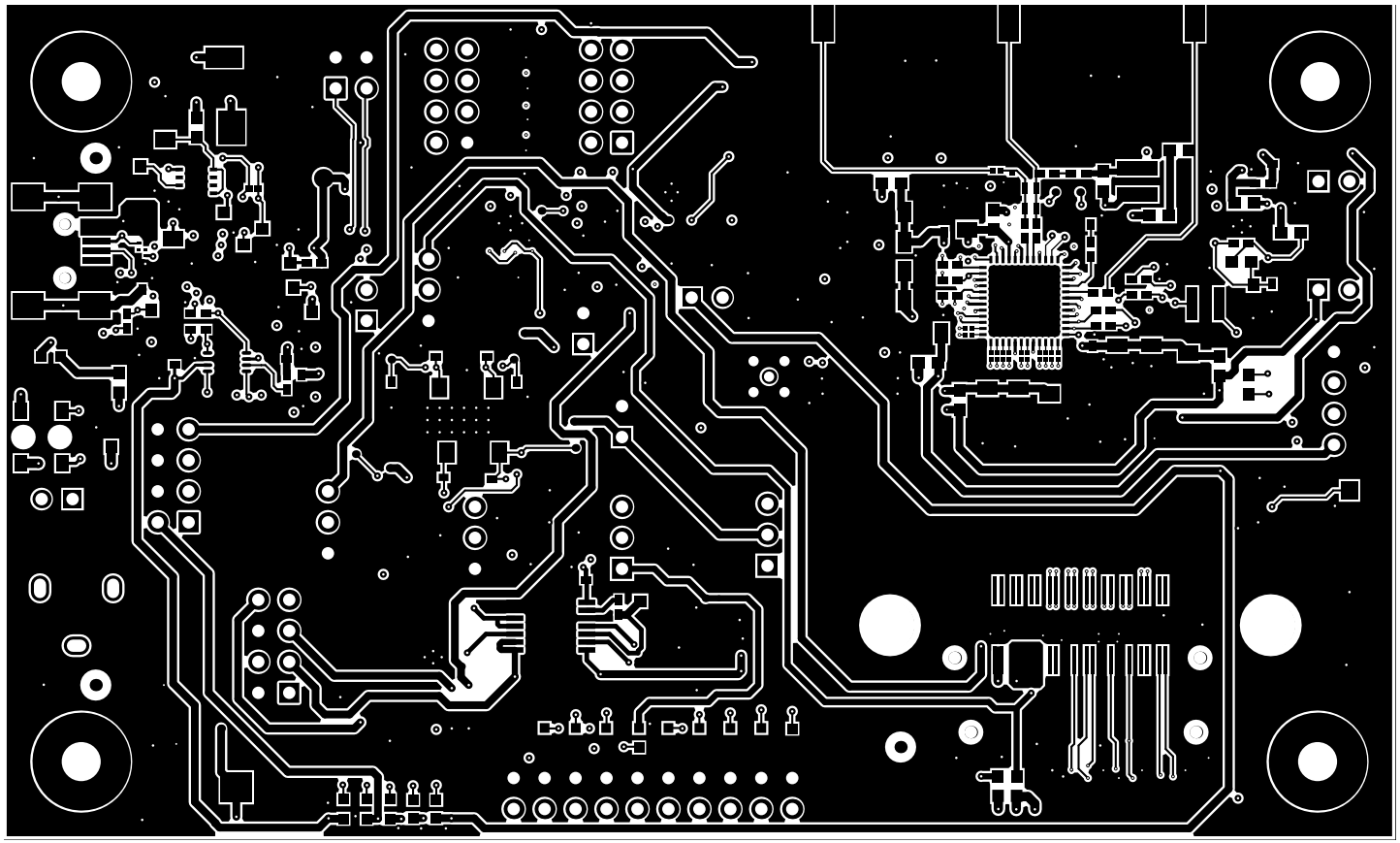

Figure 45. Layer 1: Top Signal Layer

Copyright © 2017–2019, Texas Instruments Incorporated

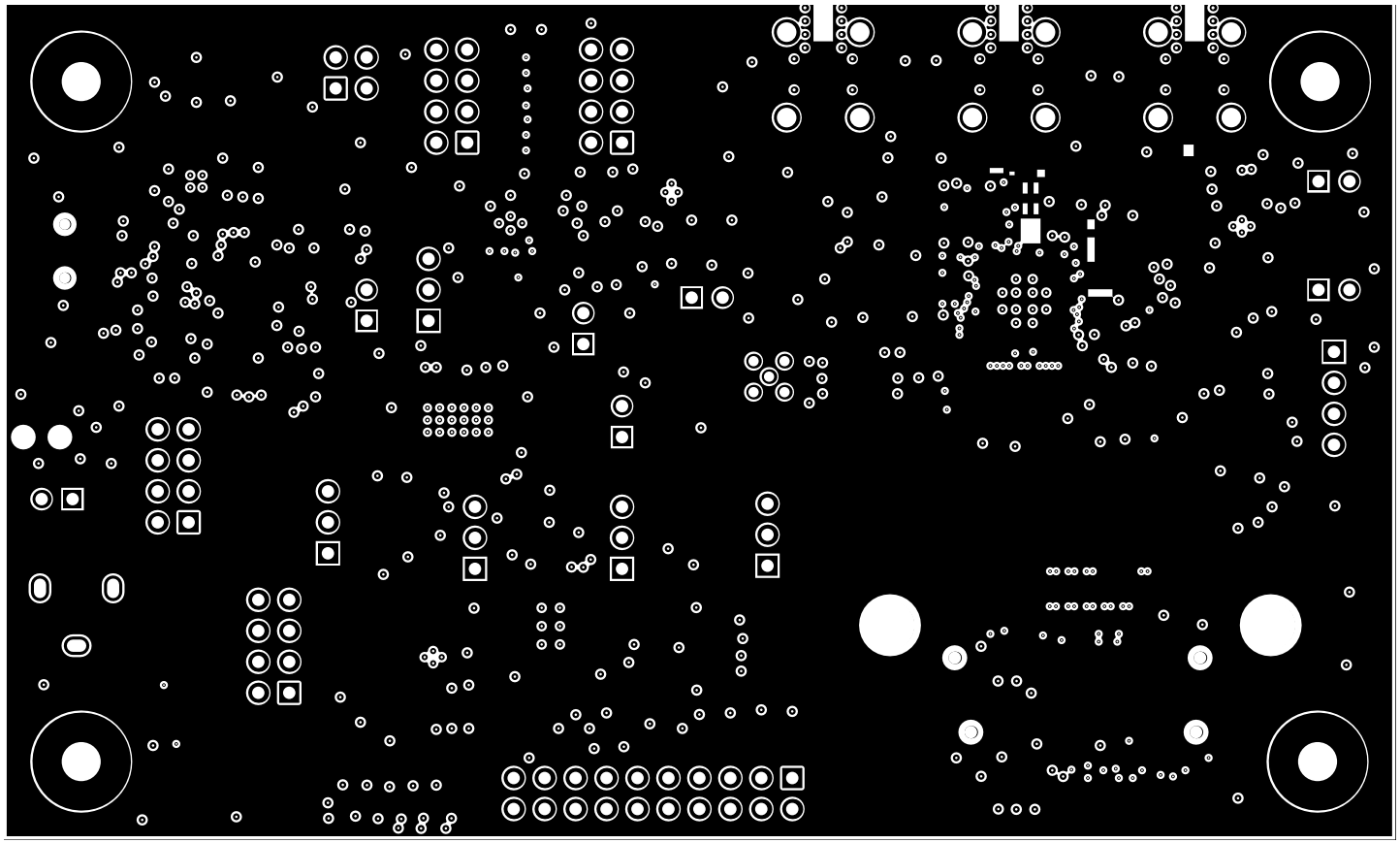

Figure 46. Layer 2: GND Plane 1

Copyright © 2017–2019, Texas Instruments Incorporated

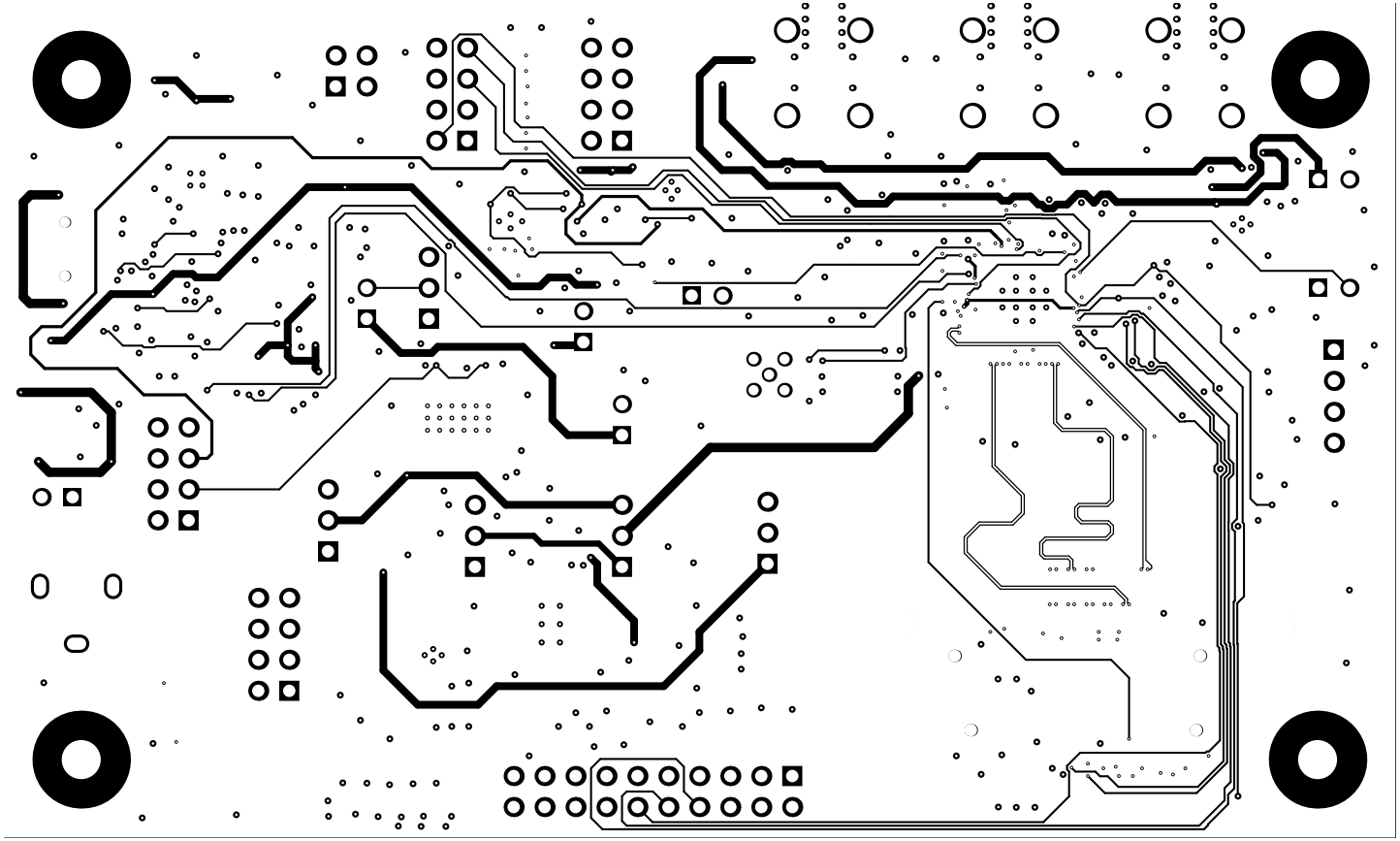

Figure 47. Layer 3: Mid Signal Layer 1

Copyright © 2017–2019, Texas Instruments Incorporated

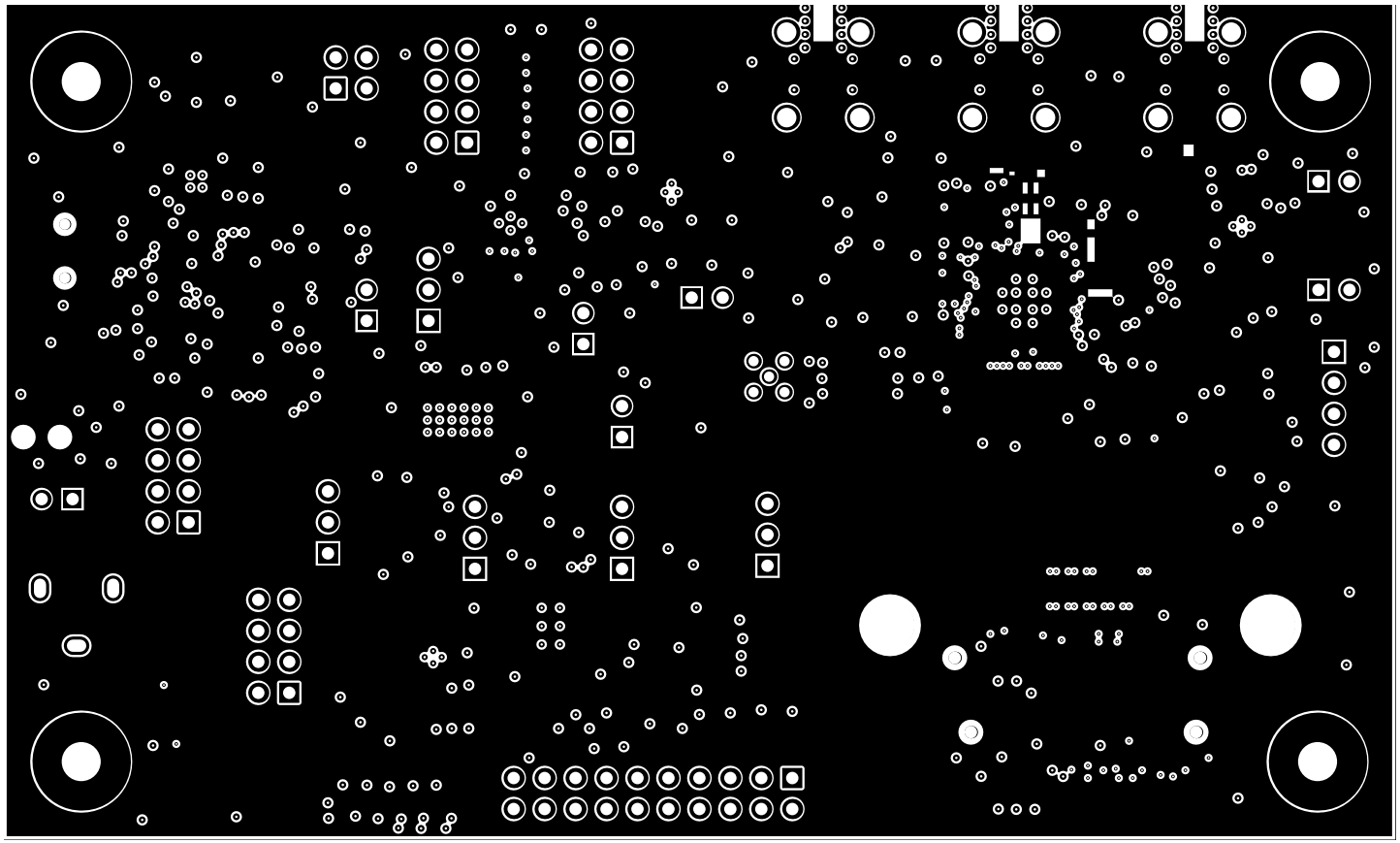

Figure 48. Layer 4: GND Plane 2

Copyright © 2017–2019, Texas Instruments Incorporated

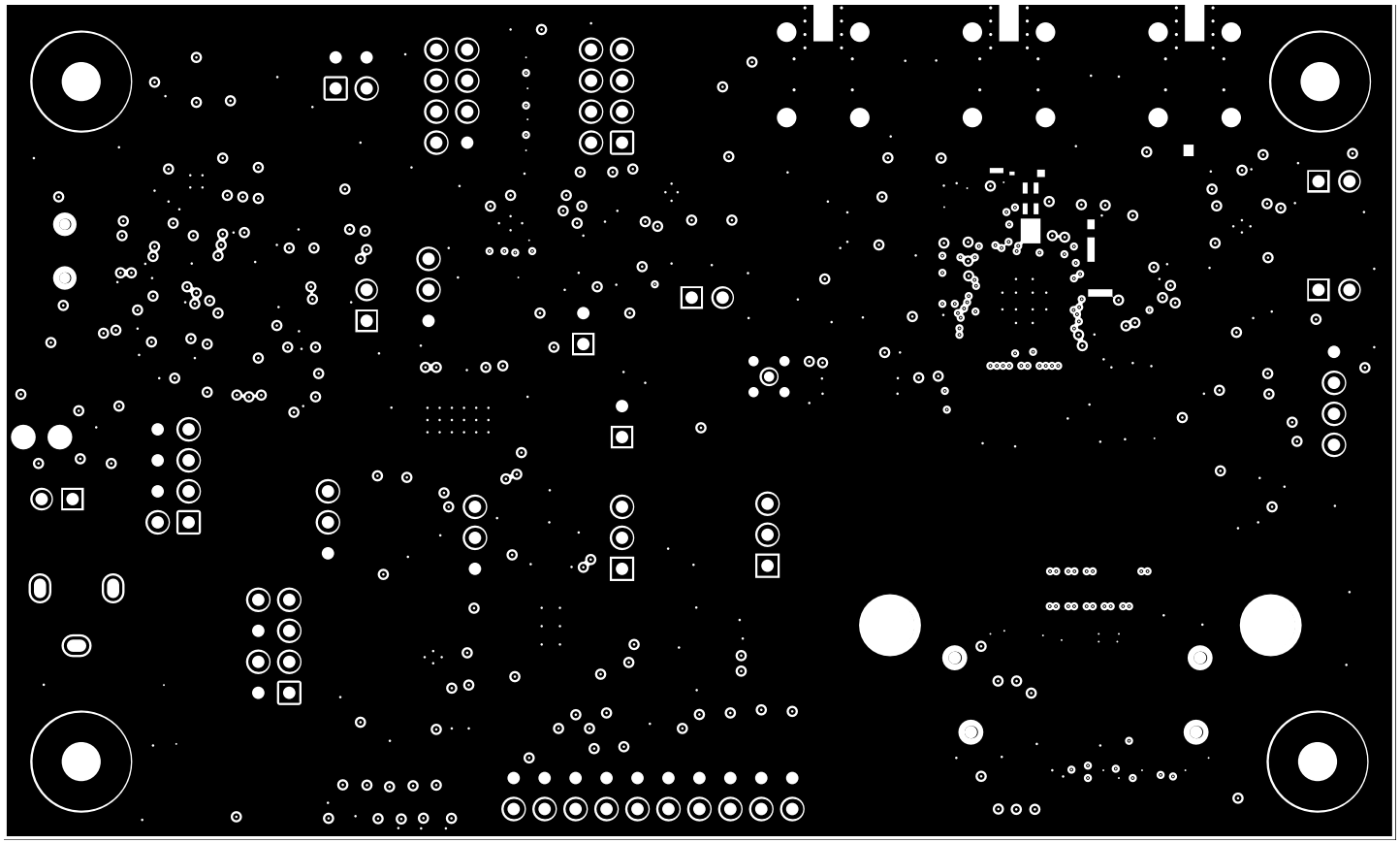

Figure 49. Layer 5: GND Plane 3

Copyright © 2017–2019, Texas Instruments Incorporated

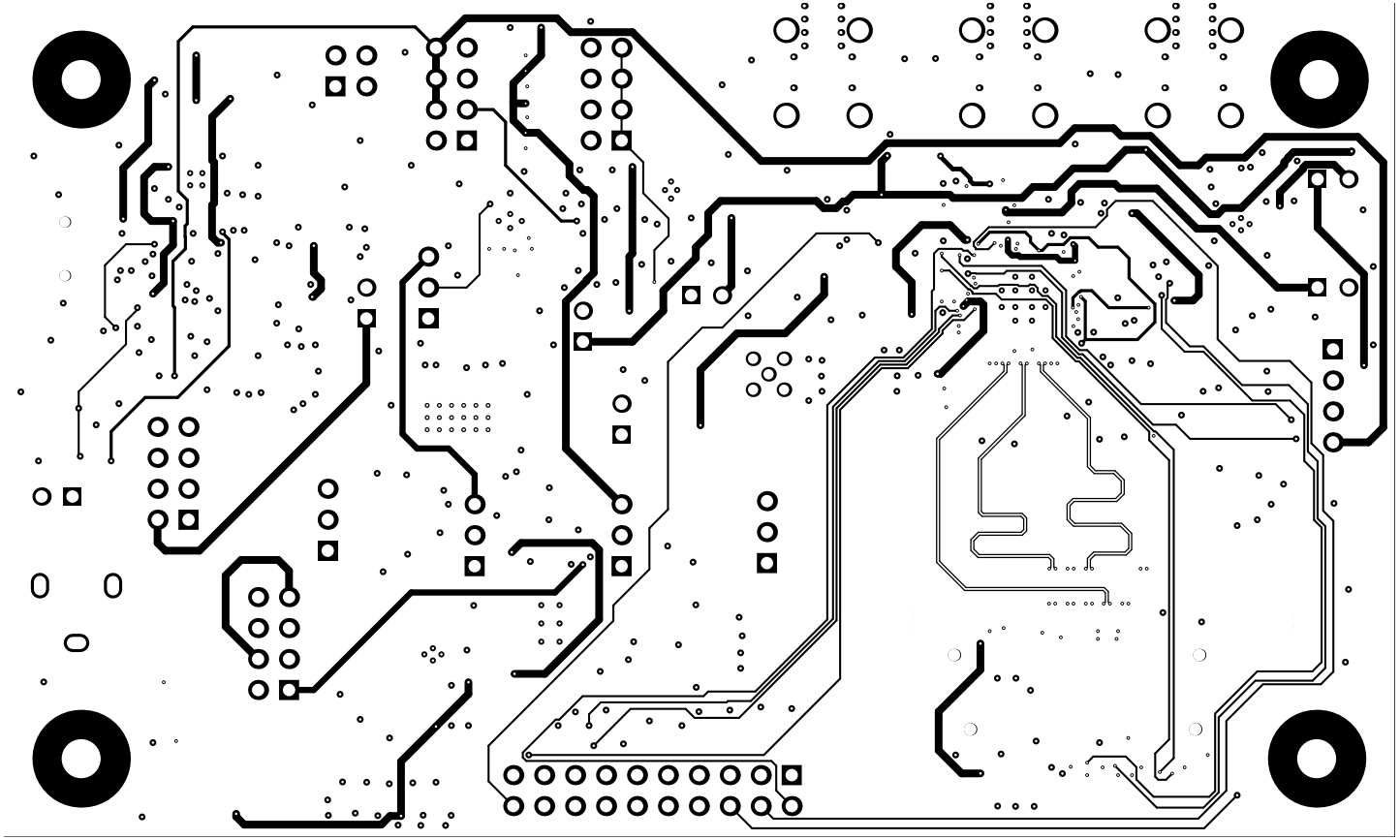

Figure 50. Layer 6: Mid Signal Layer 2

Copyright © 2017–2019, Texas Instruments Incorporated

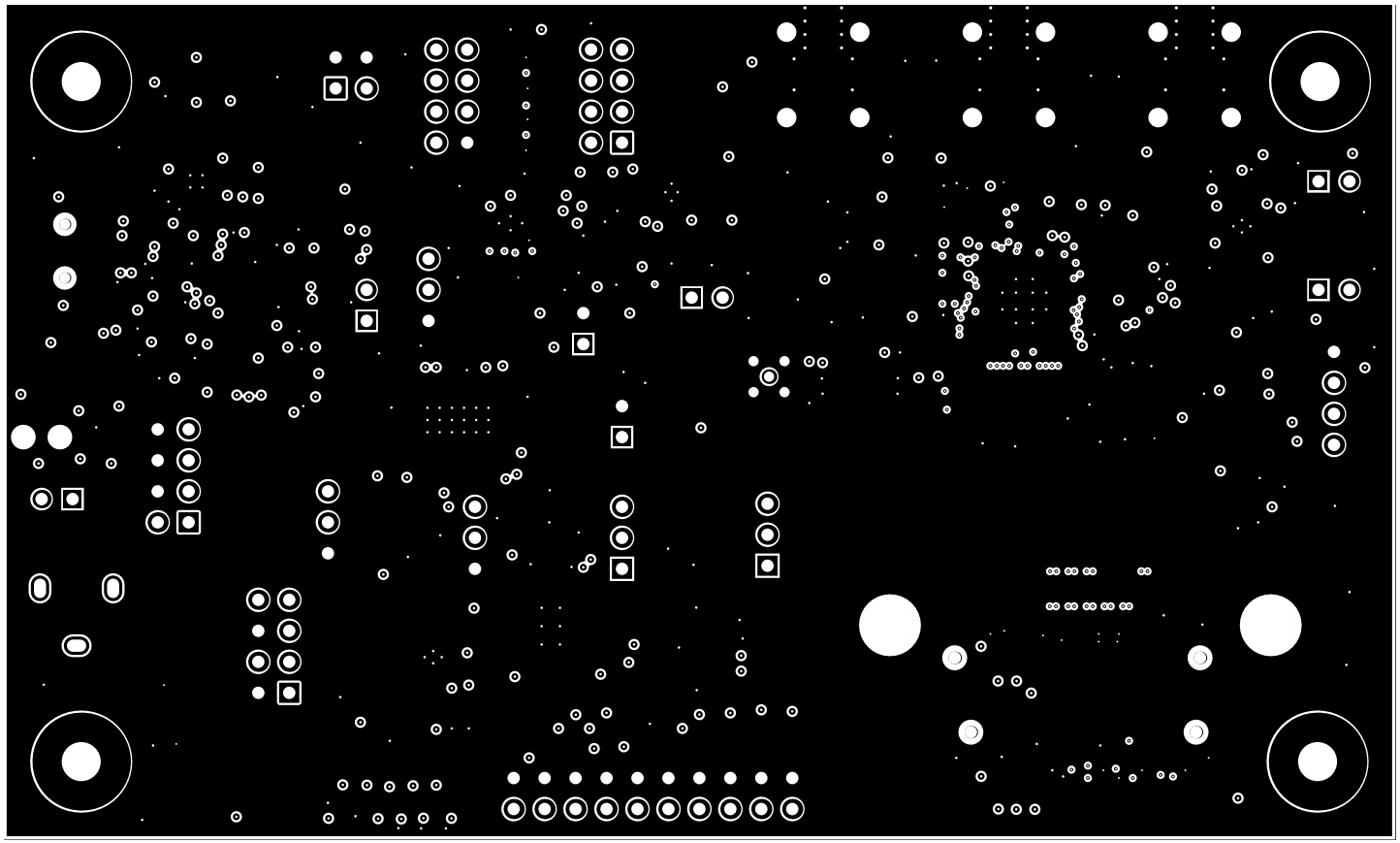

Figure 51. Layer 7: GND Plane 4

Copyright © 2017–2019, Texas Instruments Incorporated

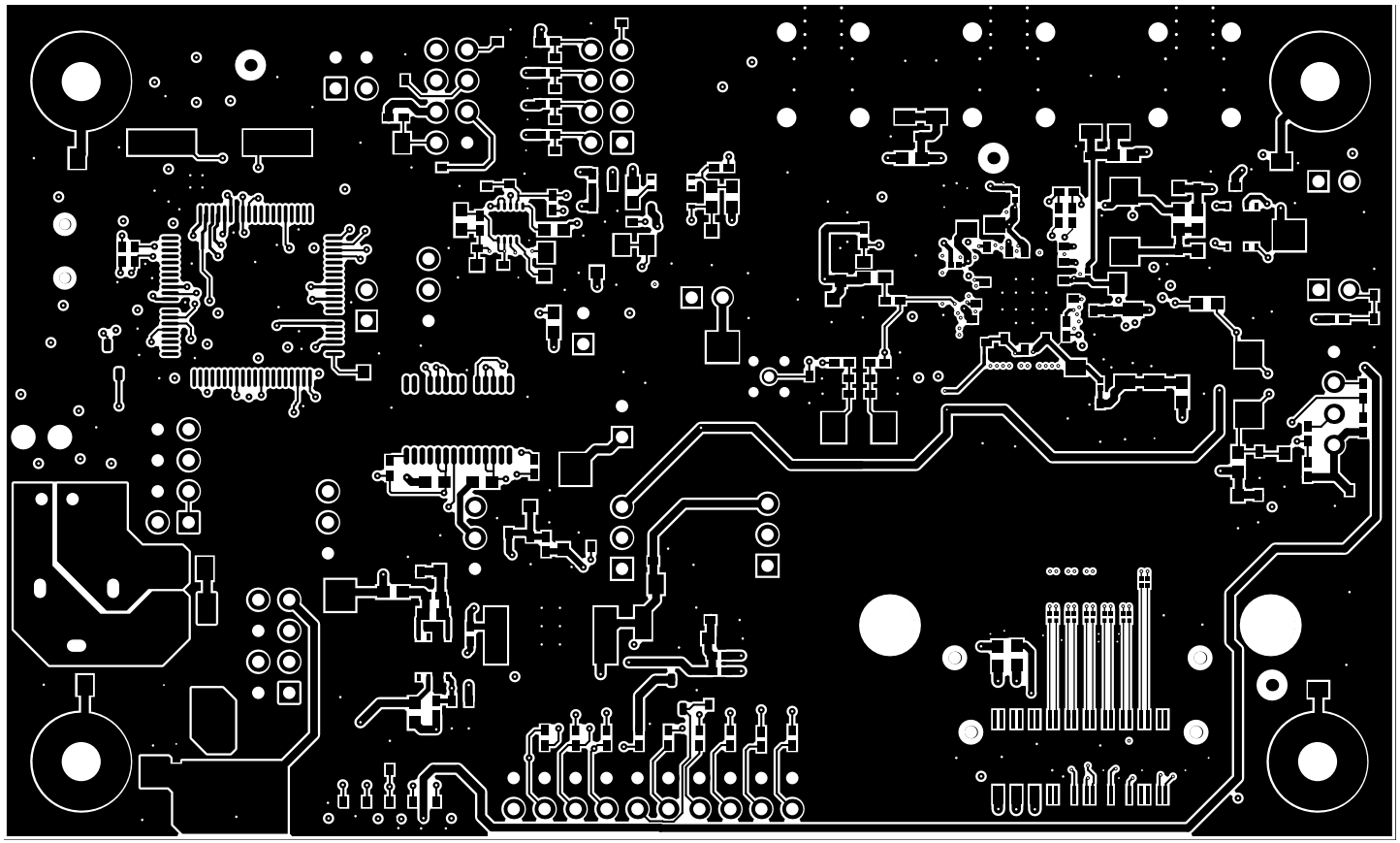

Figure 52. Layer 8: Bottom Signal Layer

Copyright © 2017–2019, Texas Instruments Incorporated

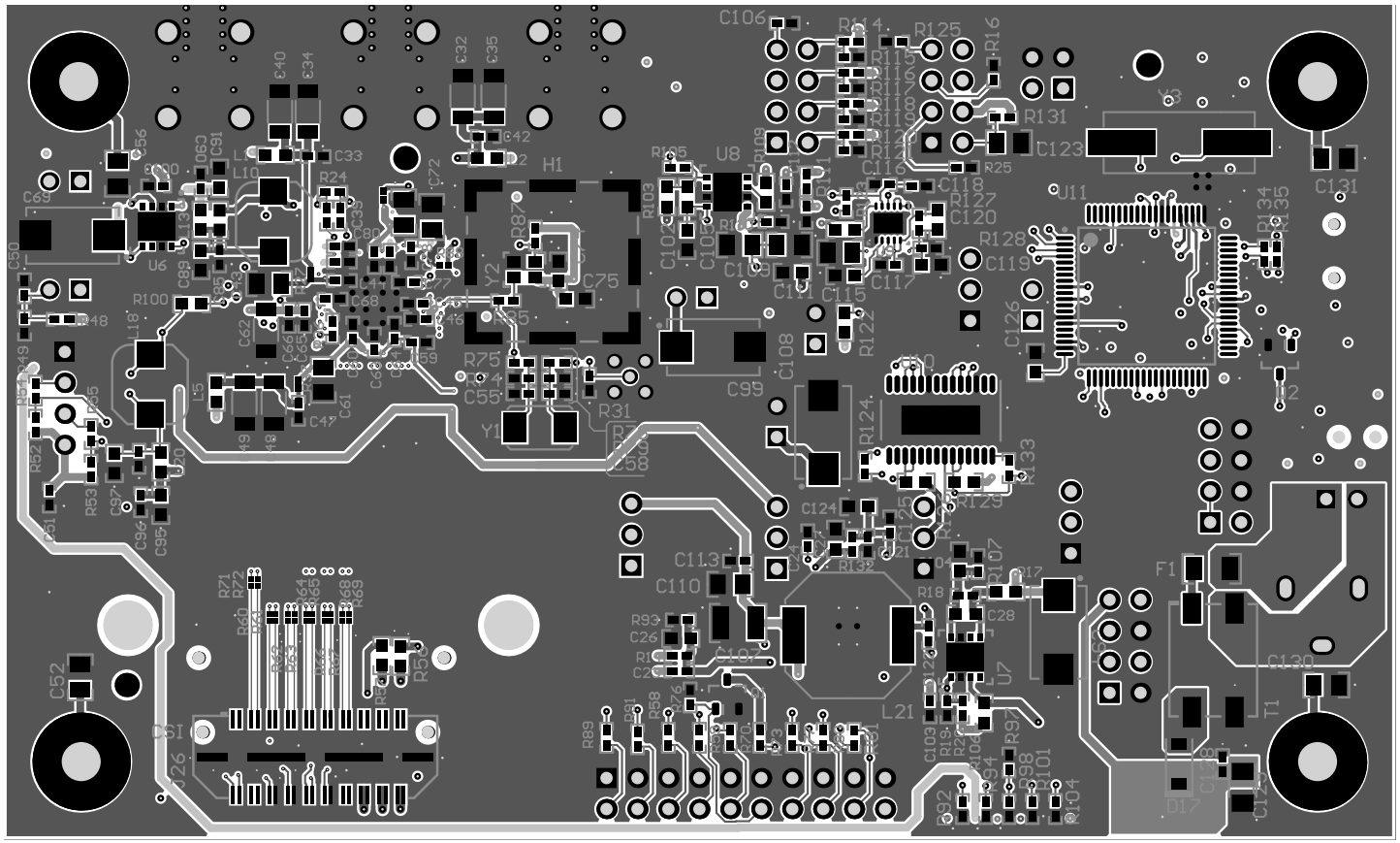

Figure 53. Bottom View Composite

Copyright © 2017–2019, Texas Instruments Incorporated

16 DS90UB95xQ1-EVM Bill of Materials

Table 13. DS90UB95x-Q1EVM BOM

ITEM	QTY	DESIGNATOR	VALUE	PART NUMBER	MANUFACTURER	DESCRIPTION
1	1	!PCB1		HSDC007	Any	Printed Circuit Board
2	2	C1, C8	220pF	06035A221FAT2A	AVX	CAP, CERM, 220 pF, 50 V, +/- 1%, C0G/NP0, 0603
3	1	C2	0.01uF	C1608X7R1H103K080AA	TDK	CAP, CERM, 0.01 µF, 50 V, +/- 10%, X7R, 0603
4	5	C3, C13, C14, C75, C111	0.1uF	0603YC104JAT2A	AVX	CAP, CERM, 0.1 µF, 16 V, +/- 5%, X7R, 0603
5	2	C4, C12	0.1uF	GRM155R71C104KA88D	MuRata	CAP, CERM, 0.1 µF, 16 V, +/- 10%, X7R, 0402
6	1	C5	1uF	C0805C105K3RACTU	Kemet	CAP, CERM, 1 µF, 25 V, +/- 10%, X7R, 0805
7	1	C6	2.2uF	0805YD225KAT2A	AVX	CAP, CERM, 2.2 µF, 16 V, +/- 10%, X5R, 0805
8	1	C7	22uF	EEE-1AA220WR	Panasonic - ECG	CAP ALUM 22UF 10V 20% SMD
9	2	C9, C10	30pF	GRM1885C2A300JA01D	MuRata	CAP, CERM, 30 pF, 100 V, +/- 5%, C0G/NP0, 0603
10	1	C11	2200pF	C0603X222K5RACTU	Kemet	CAP, CERM, 2200 pF, 50 V, +/- 10%, X7R, 0603
11	4	C15, C19, C105, C109	4.7uF	GRM21BR71C475KA73L	MuRata	CAP, CERM, 4.7uF, 16V, +/-10%, X7R, 0805
12	5	C16, C20, C110, C114, C123	10uF	GRM21BR71A106KE51L	MuRata	CAP, CERM, 10uF, 10V, +/-10%, X7R, 0805
13	12	C17, C18, C21, C22, C51, C113, C116, C117, C121, C122, C125, C128	0.1uF	GRM155R71C104KA88D	MuRata	CAP, CERM, 0.1uF, 16V, +/-10%, X7R, 0402
14	1	C23	10pF	GRM1555C1H100JA01D	MuRata	CAP, CERM, 10pF, 50V, +/-5%, C0G/NP0, 0402
15	1	C24	3300pF	GRM155R71H332KA01D	MuRata	CAP, CERM, 3300pF, 50V, +/- 10%, X7R, 0402
16	2	C25, C124	1uF	GCM188R71C105KA64D	MuRata	CAP, CERM, 1 µF, 16 V, +/- 10%, X7R, AEC-Q200 Grade 1, 0603
17	9	C26, C28, C30, C31, C101, C102, C104, C119, C120	1uF	GRM185R61C105KE44D	MuRata	CAP, CERM, 1 µF, 16 V, +/- 10%, X5R, 0603
18	1	C27	10uF	GRM188R61E106MA73D	MuRata	CAP, CERM, 10 µF, 25 V, +/- 20%, X5R, 0603
19	14	C29, C34, C40, C41, C48, C49, C53, C54, C62, C67, C81, C86, C87, C93	22uF	GRT31CR61E226KE01L	MuRata	CAP, CERM, 22 µF, 25 V,+/- 10%, X5R, AEC-Q200 Grade 3, 1206
20	2	C32, C35	22uF	GRT31CR61E226KE01L	MuRata	CAP, CERM, 22 µF, 25 V, +/- 10%, X5R, AEC-Q200 Grade 3, 1206
21	8	C33, C42, C47, C63, C66, C71, C78, C79	0.1uF	CGA2B3X7R1H104K050BB	TDK	CAP, CERM, 0.1 µF, 50 V, +/- 10%, X7R, AEC-Q200 Grade 1, 0402
22	4	C36, C43, C61, C72	4.7uF	C0805C475K3PACTU	Kemet	CAP, CERM, 4.7 µF, 25 V, +/- 10%, X5R, 0805

Copyright © 2017–2019, Texas Instruments Incorporated

Table 13. DS90UB95x-Q1EVM BOM (continued)

ITEM	QTY	DESIGNATOR	VALUE	PART NUMBER	MANUFACTURER	DESCRIPTION
23	9	C37, C44, C45, C60, C64, C65, C68, C77, C80	0.01uF	GCM155R71H103KA55D	MuRata	CAP, CERM, 0.01uF, 50V, +/-10%, C0G/NP0, 0402
24	3	C38, C39, C83	0.033uF	CGA2B3X7R1H333K050BB	TDK	CAP, CERM, 0.033 µF, 50 V, +/-10%, X7R, AEC-Q200 Grade 1, 0402
25	8	C46, C59, C73, C82, C100, C103, C112, C118	1uF	C1005JB1V105K050BC	TDK	CAP, CERM, 1 µF, 35 V, +/- 10%, JB, 0402
26	2	C50, C106	0.1uF	C1005X5R1H104K050BB	TDK	CAP, CERM, 0.1 µF, 50 V, +/-10%, X5R, 0402
27	4	C52, C56, C130, C131	4700pF	08051C472KAT2A	AVX	CAP, CERM, 4700 pF, 100 V, +/-10%, X7R, 0805
28	2	C55, C58	12pF	GRM1555C1E120JA01D	MuRata	CAP, CERM, 12pF, 25V, +/-5%, C0G/NP0, 0402
29	3	C57, C88, C92	10uF	CL21A106KAFN3NE	Samsung	CAP, CERM, 10 µF, 25 V, +/-10%, X5R, 0805
30	4	C69, C94, C99, C127	22uF	293D226X0025D2TE3	Vishay-Sprague	CAP, TA, 22uF, 25V, +/-20%, 0.7 ohm, SMD
31	5	C70, C85, C90, C96, C98	0.1uF	C1005X7R1H104K050BB	TDK	CAP, CERM, 0.1 µF, 50 V, +/-10%, X7R, 0402
32	1	C74	0.01uF	06031C103KAT2A	AVX	CAP, CERM, 0.01 µF, 100 V, +/-10%, X7R, 0603
33	1	C76	0.047uF	C1005X7R1H473K050BB	TDK	CAP, CERM, 0.047 µF, 50 V, +/-10%, X7R, 0402
34	1	C84	0.015uF	CGA2B3X7R1H153K050BB	TDK	CAP, CERM, 0.015 µF, 50 V, +/-10%, X7R, AEC-Q200 Grade 1, 0402
35	4	C89, C91, C95, C97	10uF	C1608X5R1E106M080AC	TDK	CAP, CERM, 10 µF, 25 V, +/-20%, X5R, 0603
36	1	C107	47uF	GRM32ER61C476ME15L	MuRata	CAP, CERM, 47uF, 16V, +/-20%, X5R, 1210
37	1	C108	100uF	T495D107M016ATE100	Kemet	CAP, TA, 100uF, 16V, +/-20%, 0.1 ohm, SMD
38	1	C115	0.01uF	06031C103JAT2A	AVX	CAP, CERM, 0.01uF, 100V, +/-5%, X7R, 0603
39	1	C126	0.47uF	GRM188R71A474KA61D	MuRata	CAP, CERM, 0.47 µF, 10 V, +/-10%, X7R, 0603
40	1	C129	2.2uF	293D225X9025A2TE3	Vishay-Sprague	CAP, TA, 2.2uF, 25V, +/-10%, 6.3 ohm, SMD
41	9	D1, D8, D10, D11, D12, D13, D14, D15, D16	Green	150060VS75000	Wurth Elektronik eiSos	LED, Green, SMD
42	1	D2	7.5V	1SMB5922BT3G	ON Semiconductor	Diode, Zener, 7.5 V, 550 mW, SMB
43	3	D3, D4, D5	Super Red	150060SS75000	Wurth Elektronik eiSos	LED, Super Red, SMD
44	3	D6, D7, D9	Orange	LTST-C190KFKT	Lite-On	LED, Orange, SMD
45	1	D17	40V	1N5819HW-7-F	Diodes Inc.	Diode, Schottky, 40V, 1A, SOD-123
46	1	F1		0440002.WR	Littelfuse	Fuse, 2 A, 32 V, SMD
47	1	FB1	60 ohm	BK1608HS600-T	Taiyo Yuden	Ferrite Bead, 60 ohm @ 100 MHz, 0.8 A, 0603

Copyright © 2017–2019, Texas Instruments Incorporated

Table 13. DS90UB95x-Q1EVM BOM (continued)

ITEM	QTY	DESIGNATOR	VALUE	PART NUMBER	MANUFACTURER	DESCRIPTION
48	6	FID1, FID2, FID3, FID4, FID5, FID6		N/A	N/A	Fiducial mark. There is nothing to buy or mount.
49	1	H1		BMI-S-201-F	Laird	EMI SHIELD, 13.66 x 12.70 mm, SMT
50	4	H1, H2, H5, H6		NY PMS 440 0025 PH	BF Fastener Supply	Machine Screw, Round, 4-40 x 1/4, Nylon, Philips panhead
51	1	J1		PJ-102A	CUI Inc.	Connector, DC Jack 2.1X5.5 mm, TH
52	1	J2		1734035-2	TE Connectivity	Connector, Receptacle, Mini-USB Type B, R/A, Top Mount SMT
53	7	J3, J13, J14, J17, J18, J23, J28		5-146261-1	TE Connectivity	Header, 100mil, 2x1, Gold plated, TH
54	5	J6, J9, J10, J12, J16		TSW-103-07-G-S	Samtec, Inc.	Header, TH, 100mil, 3x1, Gold plated, 230 mil above insulator
55	1	J7		TSW-102-07-G-D	Samtec	Header, 100mil, 2x2, Gold, TH
56	4	J8, J11, J15, J27		TSW-104-07-G-D	Samtec	Header, 100mil, 4x2, Gold, TH
57	1	J21		MMCX-J-P-H-ST-TH1	Samtec	Connector, MMCX 50 ohm, TH
58	1	J22		TSW-110-07-G-D	Samtec	Header, 100mil, 10x2, Gold, TH
59	1	J24		QSH-020-01-H-D-DP-A	Samtec	Receptacle, Differential, 0.5mm, 10 pair x2, Gold, SMT
60	1	J25		0022112042	Molex	Header, 100mil, 4x1, White, TH
61	1	J26		QTH-020-04-L-D-DP-A	Samtec	Header(shrouded), 0.5mm, 10 pair x 2, Gold, SMT
62	3	J29, J30, J31		59S20X-40ML5-Z	Rosenberger	Connector, RF, 50 Ohm, R/A, TH
63	8	L1, L2, L3, L4, L5, L6, L7, L8	120 ohm	BLM18SG121TN1D	MuRata	Ferrite Bead, 120 ohm @ 100 MHz, 3 A, 0603
64	2	L10, L18	100uH	CLF6045NIT-101M-D	TDK	Inductor, Wirewound, Ferrite, 100 µH, 0.61 A, 0.32 ohm, AEC-Q200 Grade 0, SMD
65	1	L11	10uH	LQH3NPN100NG0	MuRata	Inductor, Wirewound, Ferrite, 10 µH, 0.5 A, 0.57 ohm, SMD
66	1	L12		DLW21SN900HQ2L	MuRata	Coupled inductor, 0.28 A, 0.41 ohm, +/- 25%, SMD
67	2	L13, L20	1000 ohm	BLM18AG102SN1D	MuRata	Ferrite Bead, 1000 ohm @ 100 MHz, 0.4 A, 0603
68	1	L14	330 ohm	MPZ1005S331ETD25	TDK	Ferrite Bead, 330 ohm @ 100 MHz, 0.7 A, 0402
69	2	L15, L16	1500 ohm	BLM18HE152SN1D	MuRata	Ferrite Bead, 1500 ohm @ 100 MHz, 0.5 A, 0603
70	1	L17	47 ohm	MPZ1005F470ETD25	TDK	Ferrite Bead, 47 ohm @ 100 MHz, 0.45 A, 0402
71	1	L19	10uH	LQH3NPN100MJRL	MuRata	Inductor, Wirewound, Ferrite, 10 µH, 0.81 A, 0.24 ohm, SMD
72	1	L21	4.7uH	7440650047	Wurth Elektronik	Inductor, Shielded Drum Core, Ferrite, 4.7 µH, 4.2 A, 0.02 ohm, SMD
73	2	Q1, Q2	50V	BSS138	Fairchild Semiconductor	MOSFET, N-CH, 50 V, 0.22 A, SOT-23
74	1	R1	200	CRCW0603200RFKEA	Vishay-Dale	RES, 200, 1%, 0.1 W, 0603
75	1	R2	1.5k	CRCW04021K50JNED	Vishay-Dale	RES, 1.5k ohm, 5%, 0.063W, 0402
76	2	R3, R10	33k	CRCW040233K0JNED	Vishay-Dale	RES, 33k ohm, 5%, 0.063W, 0402
77	1	R4	1.2Meg	CRCW06031M20JNEA	Vishay-Dale	RES, 1.2 M, 5%, 0.1 W, 0603

Copyright © 2017–2019, Texas Instruments Incorporated

Table 13. DS90UB95x-Q1EVM BOM (continued)

ITEM	QTY	DESIGNATOR	VALUE	PART NUMBER	MANUFACTURER	DESCRIPTION
78	12	R5, R6, R29, R30, R32, R35, R48, R75, R82, R85, R86, R130	0	ERJ-2GE0R00X	Panasonic	RES, 0, 5%, 0.063 W, 0402
79	25	R7, R33, R34, R38, R39, R40, R41, R42, R43, R44, R45, R46, R47, R60, R61, R62, R63, R64, R65, R66, R67, R68, R69, R71, R72	0	ERJ-1GE0R00C	Panasonic	RES, 0, 5%, 0.05 W, 0201
80	7	R8, R11, R12, R54, R55, R78, R115	0	ERJ-2GE0R00X	Panasonic	RES, 0 ohm, 5%, 0.063W, 0402
81	1	R9	10.0k	CRCW040210K0FKED	Vishay-Dale	RES, 10.0 k, 1%, 0.063 W, 0402
82	4	R13, R19, R21, R112	3.24k	CRCW04023K24FKED	Vishay-Dale	RES, 3.24k ohm, 1%, 0.063W, 0402
83	1	R14	124k	CRCW0402124KFKED	Vishay-Dale	RES, 124k ohm, 1%, 0.063W, 0402
84	5	R15, R76, R123, R124, R133	100k	CRCW0402100KJNED	Vishay-Dale	RES, 100k ohm, 5%, 0.063W, 0402
85	4	R16, R25, R87, R125	10k	CRCW040210K0JNED	Vishay-Dale	RES, 10k ohm, 5%, 0.063W, 0402
86	14	R17, R22, R26, R50, R51, R56, R57, R103, R106, R109, R113, R122, R126, R129	0	CRCW06030000Z0EA	Vishay-Dale	RES, 0 ohm, 5%, 0.1W, 0603
87	1	R18	29.4k	CRCW040229K4FKED	Vishay-Dale	RES, 29.4 k, 1%, 0.063 W, 0402
88	7	R20, R74, R79, R102, R107, R111, R132	10.0k	CRCW040210K0FKED	Vishay-Dale	RES, 10.0k ohm, 1%, 0.063W, 0402
89	2	R23, R105	34.0k	CRCW040234K0FKED	Vishay-Dale	RES, 34.0 k, 1%, 0.063 W, 0402
90	1	R24	100	ERJ-2RKF1000X	Panasonic	RES, 100, 1%, 0.1 W, 0402
91	5	R27, R28, R37, R88, R95	0	CRCW02010000Z0ED	Vishay-Dale	RES, 0, 5%, 0.05 W, 0201
92	1	R31	50	504L50R0FTNCFT	AT Ceramics	RES, 50, 1%, 0.125 W, AEC-Q200 Grade 1, 0402
93	3	R36, R52, R53	4.7k	CRCW04024K70JNED	Vishay-Dale	RES, 4.7k ohm, 5%, 0.063W, 0402
94	1	R49	10.0k	ERJ-2RKF1002X	Panasonic	RES, 10.0 k, 1%, 0.1 W, 0402
95	10	R58, R59, R70, R77, R80, R81, R89, R91, R101, R104	220	CRCW0402220RJNED	Vishay-Dale	RES, 220, 5%, 0.063 W, 0402
96	1	R73	470	CRCW0402470RJNED	Vishay-Dale	RES, 470 ohm, 5%, 0.063W, 0402
97	3	R83, R100, R108	4.02k	CRCW06034K02FKEA	Vishay-Dale	RES, 4.02 k, 1%, 0.1 W, 0603
98	1	R84	0	CRCW06030000Z0EA	Vishay-Dale	RES, 0, 5%, 0.1 W, 0603
99	1	R90	49.9	CRCW020149R9FKED	Vishay-Dale	RES, 49.9, 1%, 0.05 W, 0201
100	2	R92, R94	470	CRCW0402470RJNED	Vishay-Dale	RES, 470, 5%, 0.063 W, 0402
101	1	R93	22.1k	CRCW040222K1FKED	Vishay-Dale	RES, 22.1k ohm, 1%, 0.063W, 0402
102	1	R96	49.9	ERJ-2RKF49R9X	Panasonic	RES, 49.9, 1%, 0.1 W, AEC-Q200 Grade 0, 0402

Copyright © 2017–2019, Texas Instruments Incorporated

Table 13. DS90UB95x-Q1EVM BOM (continued)

ITEM	QTY	DESIGNATOR	VALUE	PART NUMBER	MANUFACTURER	DESCRIPTION
103	2	R97, R98	2.4k	CRCW04022K40JNED	Vishay-Dale	RES, 2.4 k, 5%, 0.063 W, 0402
104	2	R99, R110	5.6k	CRCW04025K60JNED	Vishay-Dale	RES, 5.6 k, 5%, 0.063 W, 0402
105	1	R114	10k	CRCW040210K0JNED	Vishay-Dale	RES, 10 k, 5%, 0.063 W, 0402
106	1	R116	25.5k	CRCW040225K5FKED	Vishay-Dale	RES, 25.5 k, 1%, 0.063 W, 0402
107	1	R117	95.3k	CRCW040295K3FKED	Vishay-Dale	RES, 95.3 k, 1%, 0.063 W, 0402
108	1	R118	39.2k	CRCW040239K2FKED	Vishay-Dale	RES, 39.2 k, 1%, 0.063 W, 0402
109	2	R119, R120	78.7k	CRCW040278K7FKED	Vishay-Dale	RES, 78.7 k, 1%, 0.063 W, 0402
110	1	R121	97.6k	CRCW040297K6FKED	Vishay-Dale	RES, 97.6 k, 1%, 0.063 W, 0402
111	1	R127	1.87k	CRCW04021K87FKED	Vishay-Dale	RES, 1.87k ohm, 1%, 0.063W, 0402
112	1	R128	4.99k	CRCW04024K99FKED	Vishay-Dale	RES, 4.99k ohm, 1%, 0.063W, 0402
113	1	R131	33.2k	CRCW040233K2FKED	Vishay-Dale	RES, 33.2 k, 1%, 0.063 W, 0402
114	2	R134, R135	33	CRCW040233R0JNED	Vishay-Dale	RES, 33 ohm, 5%, 0.063W, 0402
115	1	S1		EVQ-PSD02K	Panasonic	Switch, Tactile, SPST-NO, SMT
116	12	SH-J1, SH-J2, SH-J3, SH-J4, SH-J5, SH-J6, SH-J7, SH-J8, SH-J9, SH-J10, SH-J11, SH-J12	1x2	2SN-BK-G	Samtec	Shunt, 2mm, Gold plated, Black
117	1	SW1		KSR221GLFS	C and K Components	Switch, Normally open, 2.3N force, 200k operations, SMD
118	1	T1		ACM9070-701-2PL-TL01	TDK	Coupled inductor, 5 A, 0.01 ohm, SMD
119	1	U1		TPD4E004DRYR	Texas Instruments	4-CHANNEL ESD-PROTECTION ARRAY FOR HIGH-SPEED DATA INTERFACES, DRY006A
120	1	U2		TPS73533DRBR	Texas Instruments	500mA, Low Quiescent Current, Ultra-Low Noise, High PSRR Low-Dropout Linear Regulator, DRB0008A
121	1	U3		TCA9406DCUR	Texas Instruments	TCA9406 Dual Bidirectional 1-MHz I2C-BUS and SMBus Voltage Level-Translator, 1.65 to 3.6 V, -40 to 85 degC, 8-pin US8 (DCU), Green (RoHS & no Sb/Br)
122	1	U4		TPS54225PWPR	Texas Instruments	4.5V to 18V Input, 2-A Synchronous Step-Down SWIFT™ Converter, PWP0014E
123	1	U5		DS90UB954TRGZRQ1	Texas Instruments	FPD\Link III Deserializer with CSI\2 interface for 2.3MP/60fps cameras, RGZ0048B (VQFN-48)
124	3	U6, U7, U8		LM2941LD/NOPB	Texas Instruments	1A Low Dropout Adjustable Regulator, 8-pin LLP, Pb-Free
125	1	U9		TPS74801TDRCRQ1	Texas Instruments	Single Output LDO, 1.5 A, Adjustable 0.8 to 3.6 V Output, 0.8 to 5.5 V Input, with Programmable Soft Start, 10-pin SON (DRC), -40 to 105 degC, Green (RoHS & no Sb/Br)
126	1	U10		TPS767D318PWP	Texas Instruments	Dual Output LDO, 1 A, Fixed 1.8, 3.3 V Output, 2.7 to 10 V Input, 28-pin HTSSOP (PWP), -40 to 125 degC, Green (RoHS & no Sb/Br)

Copyright © 2017–2019, Texas Instruments Incorporated

Table 13. DS90UB95x-Q1EVM BOM (continued)

ITEM	QTY	DESIGNATOR	VALUE	PART NUMBER	MANUFACTURER	DESCRIPTION
127	1	U11		MSP430F5529IPN	Texas Instruments	25 MHz Mixed Signal Microcontroller with 128 KB Flash, 8192 B SRAM and 63 GPIOs, -40 to 85 degC, 80-pin QFP (PN), Green (RoHS & no Sb/Br)
128	1	Y1		ABM3-25.000MHZ-D2W-T	Abracon Corportation	Crystal, 25 MHz, 18 pF, SMD
129	1	Y2		SG-210STF25.000000MHZY	Epson	OSC, 25 MHz, 1.6 to 3.6 V, SMD
130	1	Y3		ECS-240-20-5PX-TR	ECS Inc.	Crystal, 24.000MHz, 20pF, SMD

Copyright © 2017–2019, Texas Instruments Incorporated

Revision History

NOTE: Page numbers for previous revisions may differ from page numbers in the current version.

Changes from Original (August 2017) to A Revision	Page
• Updated User's Guide throughout	1

Copyright © 2017–2019, Texas Instruments Incorporated

IMPORTANT NOTICE AND DISCLAIMER

TI PROVIDES TECHNICAL AND RELIABILITY DATA (INCLUDING DATASHEETS), DESIGN RESOURCES (INCLUDING REFERENCE DESIGNS), APPLICATION OR OTHER DESIGN ADVICE, WEB TOOLS, SAFETY INFORMATION, AND OTHER RESOURCES “AS IS” AND WITH ALL FAULTS, AND DISCLAIMS ALL WARRANTIES, EXPRESS AND IMPLIED, INCLUDING WITHOUT LIMITATION ANY IMPLIED WARRANTIES OF MERCHANTABILITY, FITNESS FOR A PARTICULAR PURPOSE OR NON-INFRINGEMENT OF THIRD PARTY INTELLECTUAL PROPERTY RIGHTS.

These resources are intended for skilled developers designing with TI products. You are solely responsible for (1) selecting the appropriate TI products for your application, (2) designing, validating and testing your application, and (3) ensuring your application meets applicable standards, and any other safety, security, or other requirements. These resources are subject to change without notice. TI grants you permission to use these resources only for development of an application that uses the TI products described in the resource. Other reproduction and display of these resources is prohibited. No license is granted to any other TI intellectual property right or to any third party intellectual property right. TI disclaims responsibility for, and you will fully indemnify TI and its representatives against, any claims, damages, costs, losses, and liabilities arising out of your use of these resources.

TI’s products are provided subject to TI’s Terms of Sale (www.ti.com/legal/termsofsale.html) or other applicable terms available either on ti.com or provided in conjunction with such TI products. TI’s provision of these resources does not expand or otherwise alter TI’s applicable warranties or warranty disclaimers for TI products.

Mailing Address: Texas Instruments, Post Office Box 655303, Dallas, Texas 75265
Copyright © 2019, Texas Instruments Incorporated