DS90UB921-Q1EVM

User's Guide

Literature Number: SNLU205
March 2016

Contents

1 DS90UB921-Q1EVM User's Guide 5
- 1.1 General Description 5
- 1.2 Features 5
- 1.3 System Requirements 6
- 1.4 Contents of the Demo Evaluation Kit 6
- 1.5 Applications Diagram 6
- 1.6 Typical Configuration 7
- 1.7 Quick Start Guide 8
- 1.8 Default Jumper Settings 9
- 1.9 Default Switch Settings 9
- 1.10 Demo Board Connections 10
- 1.11 Single-ended (Coax) and Differential (STP) Operation Configuration 12
- 1.12 ALP Software Setup 15
  - 1.12.1 System Requirements 15
  - 1.12.2 Download Contents 15
  - 1.12.3 Installation of the ALP Software 15
  - 1.12.4 Startup - Software Description 16
  - 1.12.5 Information Tab 19
  - 1.12.6 Pattern Generator Tab 20
  - 1.12.7 Registers Tab 21
  - 1.12.8 Registers Tab - Address 0x00 selected 22
  - 1.12.9 Scripting Tab 24
- 1.13 Troubleshooting ALP Software 25
  - 1.13.1 ALP Loads the Incorrect Profile 25
  - 1.13.2 ALP does not detect the EVM 27
- 1.14 Typical Connection and Test Equipment 29
- 1.15 Equipment References 30
- 1.16 Cable References 30

2 Bill of Materials 31

A EVM PCB Schematics 38

B Board Layout 45

Copyright © 2016, Texas Instruments Incorporated

List of Figures

1-1. Applications Diagram 6
1-2. Typical Configuration 7
1-3. Interfacing to the EVM 8
1-4. Single-Ended (Coax) at Top Layer 12
1-5. Single-Ended (Coax) Configuration Schematic 13
1-6. Differential (STP) at Bottom Layer 13
1-7. Differential (STP) Configuration Schematic 14
1-8. Launching ALP 16
1-9. Initial ALP Screen 17
1-10. Follow-up Screen 18
1-11. ALP Information Tab 19
1-12. ALP Pattern Generator Tab 20
1-13. ALP Registers Tab 21
1-14. ALP Device ID Selected 22
1-15. ALP Scripting Tab 24
1-16. USB2ANY Setup 25
1-17. Remove Incorrect Profile 25
1-18. Add Correct Profile 26
1-19. ALP No Devices Error 27
1-20. Windows 7, ALP USB Driver 27
1-21. ALP in Demo Mode 28
1-22. ALP Preferences Menu 28
1-23. Typical Test Setup for Video Application 29
1-24. Typical Test Setup for Evaluation 29
B-1. Top Layer 45
B-2. Inner GND Layer 46
B-3. Inner Power Supply Layer 47
B-4. Inner GND Layer 48
B-5. Inner Power Supply Layer 49
B-6. Bottom Layer 50

Copyright © 2016, Texas Instruments Incorporated

List of Tables

1-1. Default Board Jumper Settings 9
1-2. Default Board Switch Settings 9
1-3. Power Supply 10
1-4. USB2ANY Connector 10
1-5. I2C Interface Header 10
1-6. MODE_SEL Settings 10
1-7. Configuration Select (MODE_SEL) -- SW-DIP8 - S1 10
1-8. Low Frequency (LFMODE) and Intermediate Freuqncy (IFMODE) - SW-DIP2 - S4 11
1-9. IDx SW-DIP8 - S2 11
2-1. Bill of Materials 31

Copyright © 2016, Texas Instruments Incorporated

DS90UB921-Q1EVM User's Guide

1.1 General Description

The DS90UB921-Q1EVM (Evaluation Module) is 24-bit Color FPD-Link III Serializer with Bidirectional Control Channel. This kit will demonstrate the functionality and operation of the DS90UB921-Q1. The DS90UB921-Q1 is in conjunction with the DS90UB922-Q1, DS90UB926Q-Q1, DS90UB928Q-Q1, DS90UB940-Q1, and DS90UB948-Q1 Deserializers, provides a complete digital interface for concurrent transmission of high-speed video, audio, and control data for automotive display and image sensing applications. The DS90UB921-Q1 supports Extended High Definition (1920 x 720p / 60Hz) Digital Video Format with 24-bit color depth.

The DS90UB921-Q1 incorporates an embedded bidirectional control channel and low latency GPIO controls. The device translates a parallel interface into a single pair high-speed serialized interface. The serial bus scheme, FPD-Link III, supports full duplex of high-speed video data transmission and bidirectional control communication over a single link.

The DS90UB921-Q1 supports clocks in the range of 5 MHz to 96 MHz.

WARNING

The demo board is not intended for EMI testing. The demo board was designed for easy accessibility to device pins with tap points for monitoring or applying signals, additional pads for termination, and multiple connector options.

1.2 Features

- Supports Extended High Definition (1920x720p/60Hz) Digital Video Format with 24-bit Color Depth
- RGB888 + VS, HS, and DE
- Parallel LVCMOS Video Inputs
- Bidirectional Control Interface Channel Interface with I2C Compatible Serial Control Bus
- Up to 10 meters over Differential Shielded Twisted-Pair (STP) cable or Single-Ended Coaxial (Coax)
  - STP mode: 5 - 96 MHz Pixel Clock
  - Coax mode: 15 - 96 MHz Pixel Clock
- Backwards Compatible to DS90UB922-Q1, DS90UB926Q-Q1, DS90UB928-Q1, DS90UB940-Q1, and DS90UB948-Q1 FPD-Link III Deserializers
- 4 Optional Bidirectional GPIO Channels
- Spread Spectrum Tolerant Input
- Single 3.3 V Operation with 1.8 V or 3.3 V Compatible LVCMOS I/O Interface
- DC-Balanced and Scrambled Data with Embedded Clock
- Internal pattern Generation
- Automotive grade product: AEC-Q100 Grade 2 qualified

Copyright © 2016, Texas Instruments Incorporated

1.3 System Requirements

In order to demonstrate, the following is required:

1. FPD-Link III compatible Deserializer
   (a) DS90UB922-Q1, DS90UB940-Q1 and DS90UB948-Q1 up to 96MHz
   (b) DS90UB926Q-Q1, and DS90UB928-Q1 up to 85MHz
2. Optional I^2C controller
3. Power supply for 3.3V or 12V @ 1A

1.4 Contents of the Demo Evaluation Kit

1. One EVM board with the DS90UB921-Q1

1.5 Applications Diagram

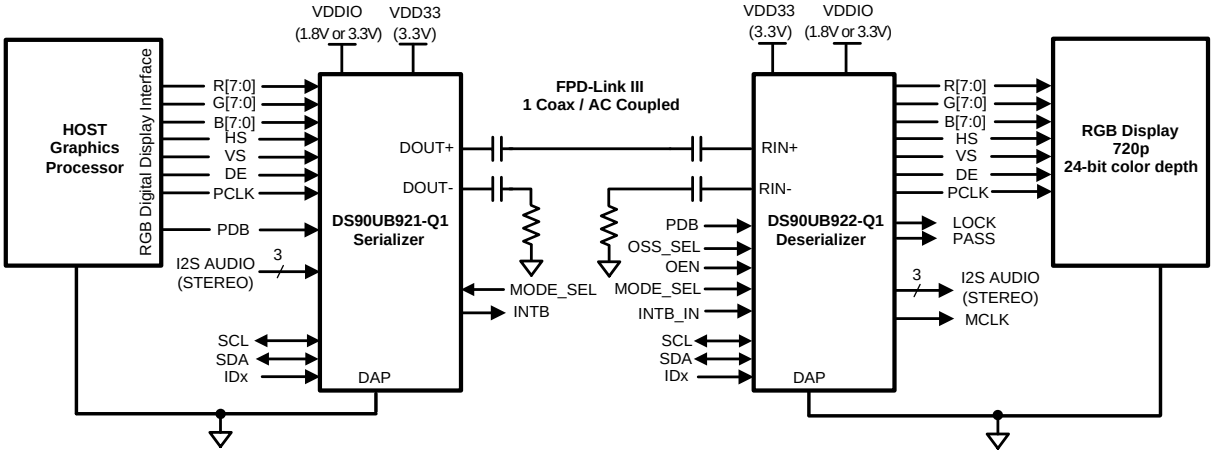

Figure 1-1. Applications Diagram

Copyright © 2016, Texas Instruments Incorporated

1.6 Typical Configuration

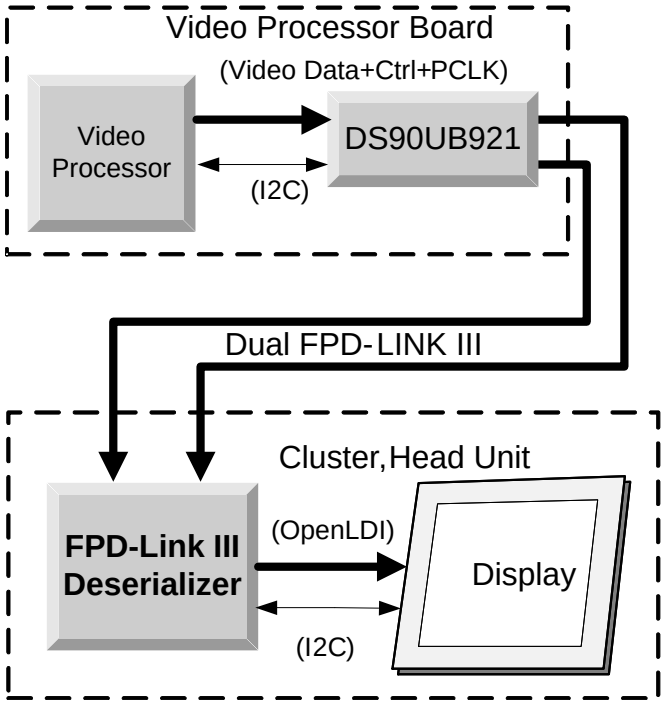

Figure 1-2. Typical Configuration

Figure 1-1 and Figure 1-2 illustrate the use of the chipset in a display application.

Copyright © 2016, Texas Instruments Incorporated

1.7 Quick Start Guide

1. The DS90UB921-Q1EVM is configured for the single-ended operation by using Coax cable. (default)
2. Connect J28 and J29 (DOUT_P, DOUT_N) to compatible Deserializer e.g. DS90UB922-Q1, DS90UB926Q-Q1, DS90UB928-Q1, DS90UB940-Q1, and DS90UB948-Q1.
3. Configure switches S1 and S2 to set device's operating modes
   - S1: MODE_SEL = 1 (default factory setting)
   - S2: IDx = 0x18 (default factory setting)
4. Connect J23, J24, and J25 to 3.3V.
   (a) Optional power options available, J13, 12V (see Table 1-3)
5. Connect J7 with miniUSB (5-pin_ to USB A (4-pin) cable to PC USB port

For details of pin-names and pin-functions, please refer to the DS90UB921-Q1 datasheet.

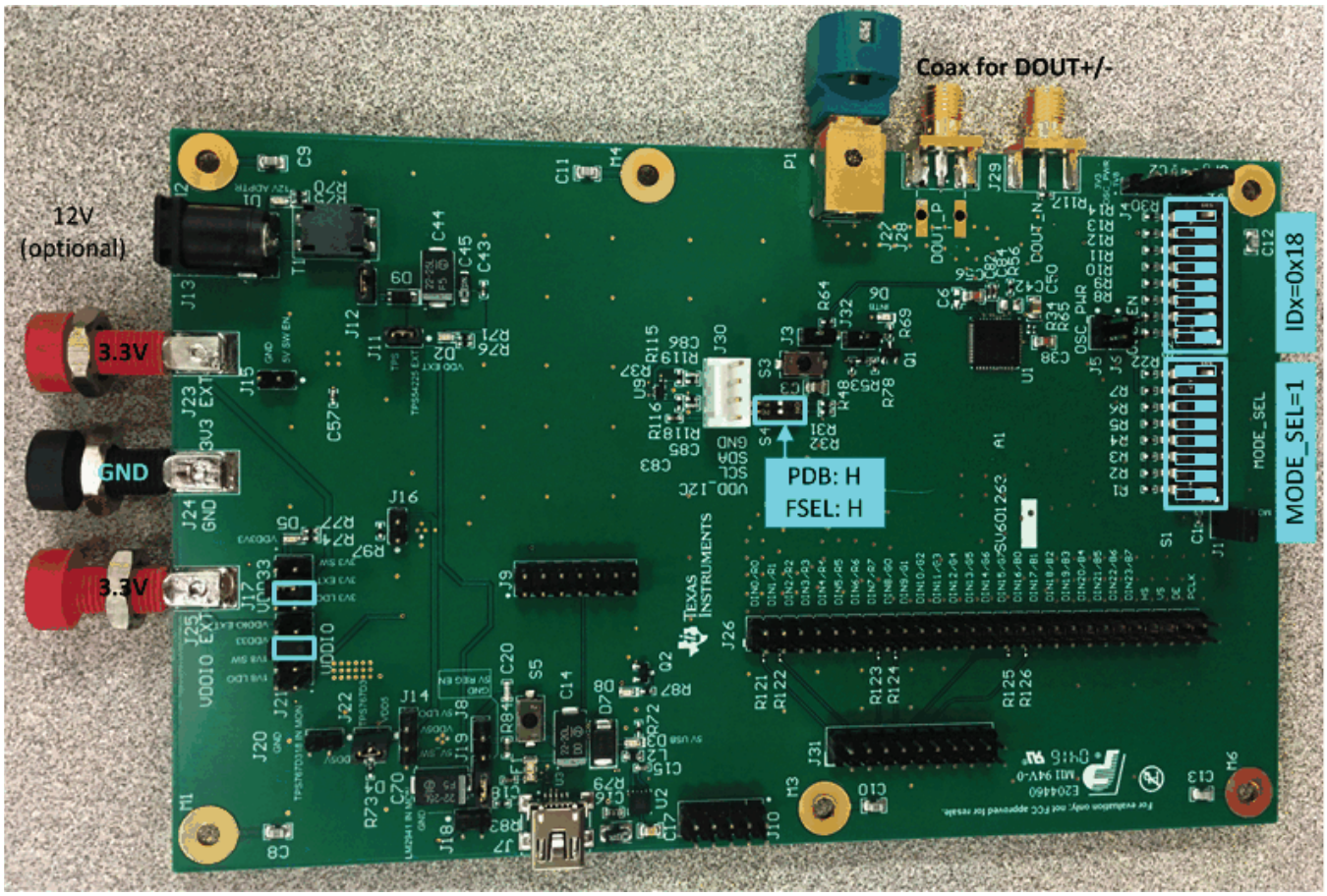

Figure 1-3. Interfacing to the EVM

Copyright © 2016, Texas Instruments Incorporated

1.8 Default Jumper Settings

Ensure that the board has the default board jumper settings:

Table 1-1. Default Board Jumper Settings

JUMPER	JUMPER SETTINGS
J17	Shorted 3V3 EXT
J21	Shorted VDD33
J22	Shorted

1.9 Default Switch Settings

Ensure that the board has the default board switch settings:

Table 1-2. Default Board Switch Settings

SWITCH	SWITCH SETTINGS
S1	8 ON, 1 to 7 OFF
S2	8 ON, 1 to 7 OFF
S4	1 and 2 OFF

Copyright © 2016, Texas Instruments Incorporated

1.10 Demo Board Connections

Table 1-3. Power Supply

DESIGNATOR	SIGNAL	DESCRIPTION
J12	+12V	12V ±5% Main Power, Single +12V power connector that supplies power to the entire board.
J17.2	+3.3V	3V3 EXT, 3.3V ±5%, Alternative to Main Power.
J21.3	+3.3V	VDD33, 3.3V ±5%, Alternative to Main Power.

Table 1-4. USB2ANY Connector

DESIGNATOR	DESCRIPTION
J7	mini USB 5 pin

Table 1-5. I2C Interface Header

DESIGNATOR	SIGNAL
J30.1	VDDI2C
J30.2	SCL
J30.3	SDA
J30.4	GND

Configuration of the device may be done via the MODE_SEL[1:0]. These modes are latched into register location during power-up:

Table 1-6. MODE_SEL Settings

MODE	SETTING	FUNCTION
ALTERNATE FREQUENCY	0	See Table 1-7 and Table 1-8
	1	
REPEATER	0	Repeater OFF (Default)
	1	Repeater ON
18-BIT MODE	0	Normal 24-bit RGB Mode (Default)
	1	18-bit RGB Mode. Note: use of GPIO(s) on unused inputs must be enabled by Register.

Table 1-7. Configuration Select (MODE_SEL) -- SW-DIP8 - S1(1)

MODE #	ALTERNATE FREQUENCY	REPEATER	18- BIT MODE
1	0	0	0
2	0	1	0
3	0	1	1
4	1	0	0
5	1	0	1
6	1	1	0
7	1	1	1

(1) Only set one high.

Copyright © 2016, Texas Instruments Incorporated

Table 1-8. Low Frequency (LFMODE) and Intermediate Freuqncy (IFMODE) - SW-DIP2 - S4

FSEL (pin 15 or Register 0x35[7:6]	ALTERNATE FREQUENCY (set by MODE_SEL pin or Register 0x04[1:0])	MODE	PCLK RANGE for COAX	PCLK RANGE for STP
L	L	HFMODE	N/A	15 - 96 MHz
H	L	HFMODE (default)	48 - 96 MHz	N/A
H	H	IFMODE	24 - 48 MHz	N/A
L	H	LFMODE	15 - 24 MHz	5 - 15 MHz

Table 1-9. IDx SW-DIP8 - S2(1)

DESIGNATOR	7-Bit ADDRESS	8-Bit ADDRESS
S2.1 (Default)	0x0C	0x18
S2.2	0x0E	0x1C
S2.3	0x10	0x20
S2.4	0x12	0x24
S2.5	0x14	0x28
S2.6	0x16	0x2C
S2.7	0x18	0x30
S2.8	0x1A	0x34

(1) Only set one high.

Copyright © 2016, Texas Instruments Incorporated

1.11 Single-ended (Coax) and Differential (STP) Operation Configuration

The DS90UB921-Q1EVM supports both Single-ended (Coax) and Differential (STP) operations.

For Single-ended (Coax) operation (default), C82 is 330nF and C84 is 150nF on Top layer. Use SMA connectors (J28, J29). For Differential (STP) operation, Remove C82 and C84 and populate 100nF on C80 and C81 on Bottom layer. Use HSD connector (J27).

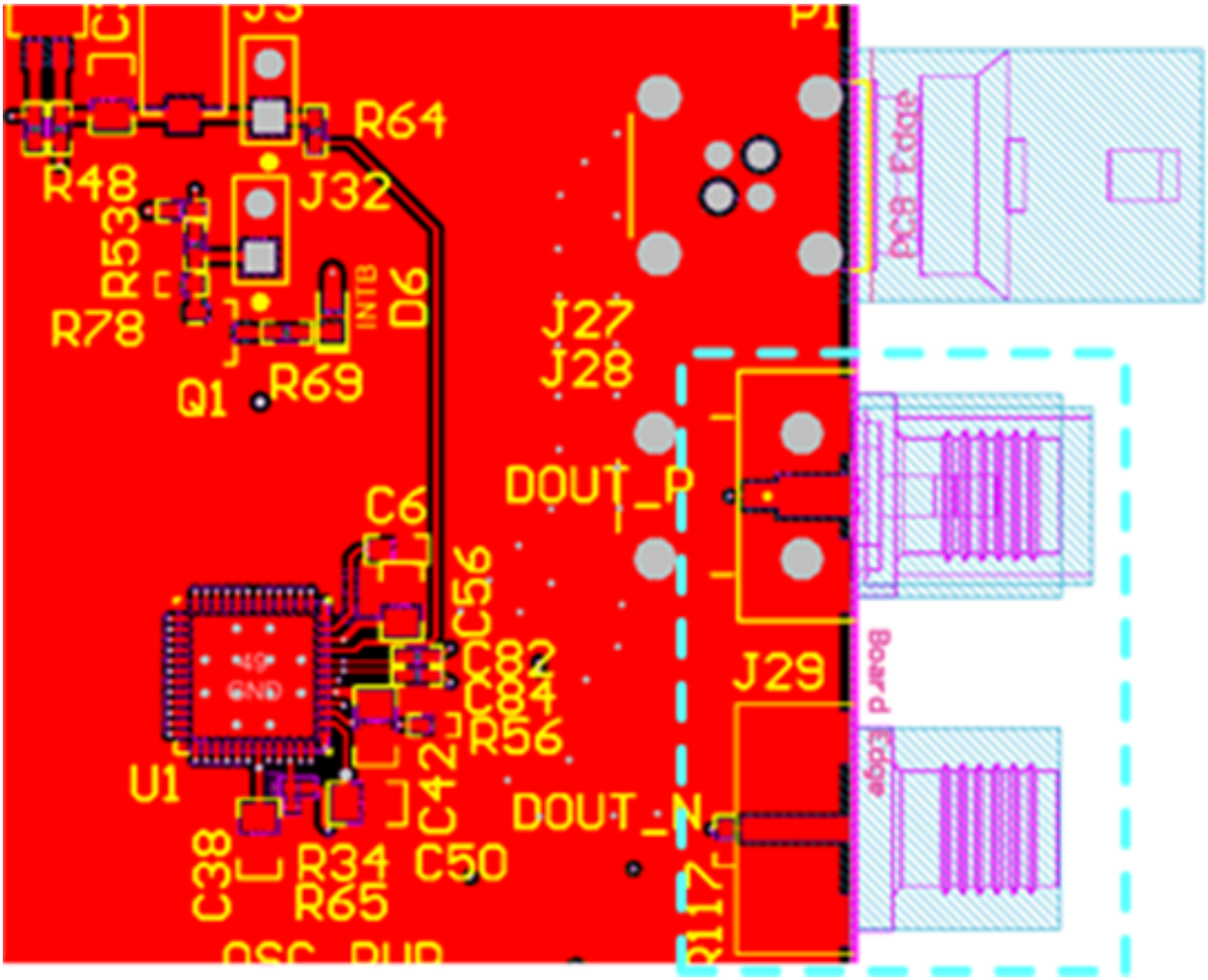

Figure 1-4. Single-Ended (Coax) at Top Layer

Copyright © 2016, Texas Instruments Incorporated

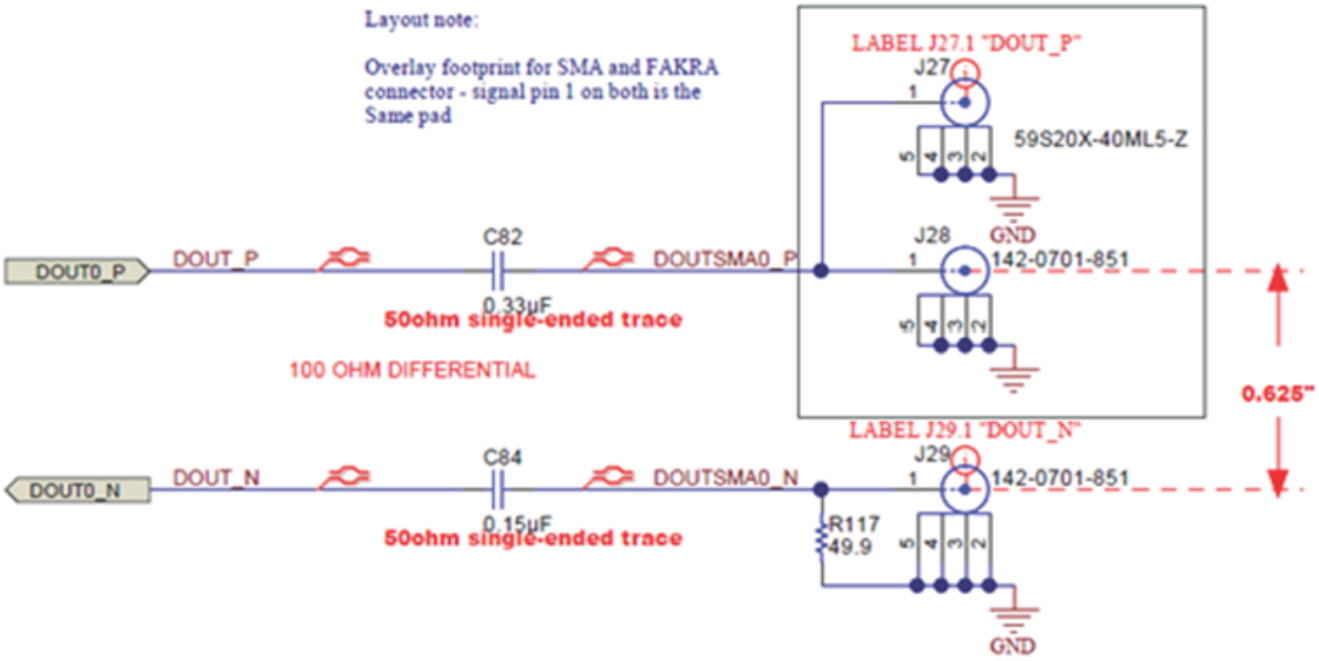

Figure 1-5. Single-Ended (Coax) Configuration Schematic

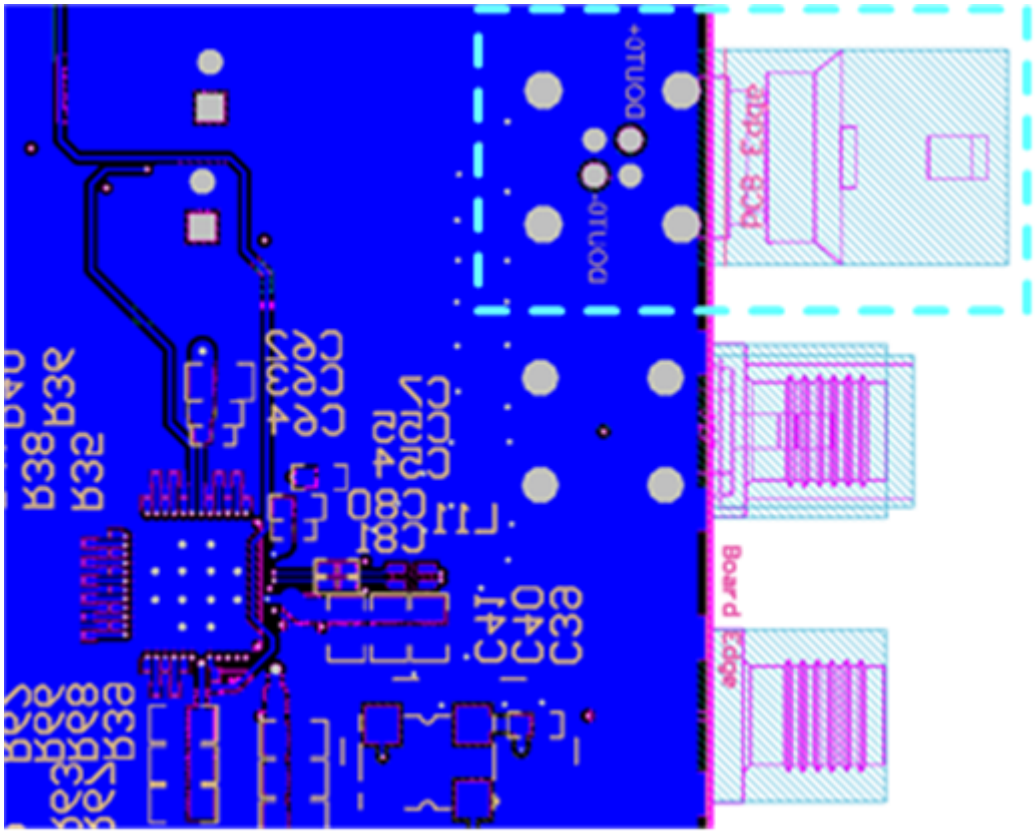

Figure 1-6. Differential (STP) at Bottom Layer

Copyright © 2016, Texas Instruments Incorporated

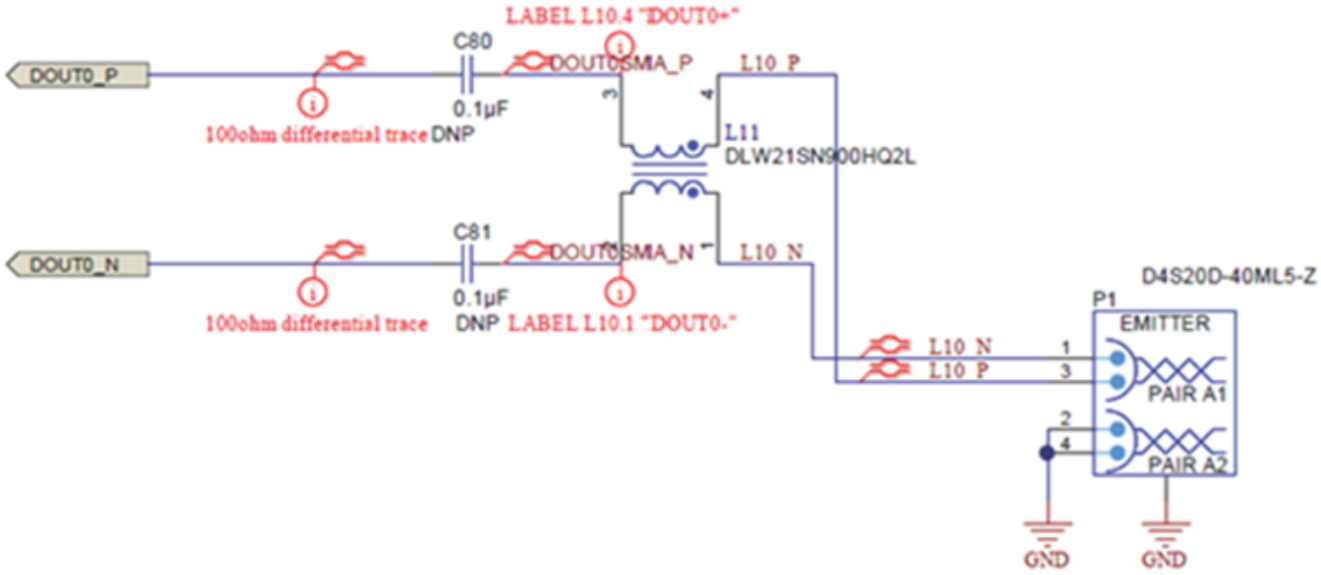

Figure 1-7. Differential (STP) Configuration Schematic

Copyright © 2016, Texas Instruments Incorporated

1.12 ALP Software Setup

1.12.1 System Requirements

Operating System:	Windows 7 64-bit
USB:	USB2ANY
USB2ANY Firmware Version:	2.5.2.0

1.12.2 Download Contents

TI Analog LaunchPAD can be downloaded from: http://www.ti.com/tool/alp.

Download and extract the zip file to a temporary location that can be deleted later.

Make sure J7 on the DS90UB921-Q1 EVM is connected to a PC USB port with USB cable and power is applied to the DS90UB921-Q1 EVM.

The following installation instructions are for the Windows 7 64-bit Operating System.

1.12.3 Installation of the ALP Software

Execute the ALP Setup Wizard program called “ALPF_setup_v_x_x_x.exe” that was extracted to a temporary location on the local drive of your PC.

There are 7 steps to the installation once the setup wizard is started:

1. Select the "Next" button.
2. Select “I accept the agreement” and then select the “Next” button.
3. Select the location to install the ALP software and then select the “Next” button.
4. Select the location for the start menu shortcut and then select the “Next” button.
5. There will then be a screen that allows the creation of a desktop icon. After selecting the desired choices select the “Next” button.
6. Select the “Install” button, and the software will then be installed to the selected location.
7. Uncheck “Launch Analog LaunchPAD” and select the “Finish” button. The ALP software will start if “Launch Analog LaunchPAD” is checked, but it will not be useful until the USB driver is installed and board is attached.

Connect J7 USB jack of the DS90UB921-Q1 EVM board to a PC/laptop USB port using a Type A 

A to mini-B 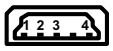

MINI USB cable. The “Found New Hardware Wizard” will open on the PC/laptop.

Copyright © 2016, Texas Instruments Incorporated

1.12.4 Startup - Software Description

Make sure all the software has been installed and the hardware is powered on and connected to the PC. Execute “Analog LaunchPAD” shortcut from the start menu. The default start menu location is under All Programs > Texas Instruments > Analog LaunchPAD vx.x.x > Analog LaunchPAD to start MainGUI.exe.



Figure 1-8. Launching ALP

Copyright © 2016, Texas Instruments Incorporated

1.12.4.1 Initial ALP Screen

The application should come up in the state shown in Figure 1-9. If it does not, see Section 1.13, “Troubleshooting ALP Software”.

Under the Devices tab click on “DS90UB921-Q1” to select the device and open up the device profile and its associated tabs.

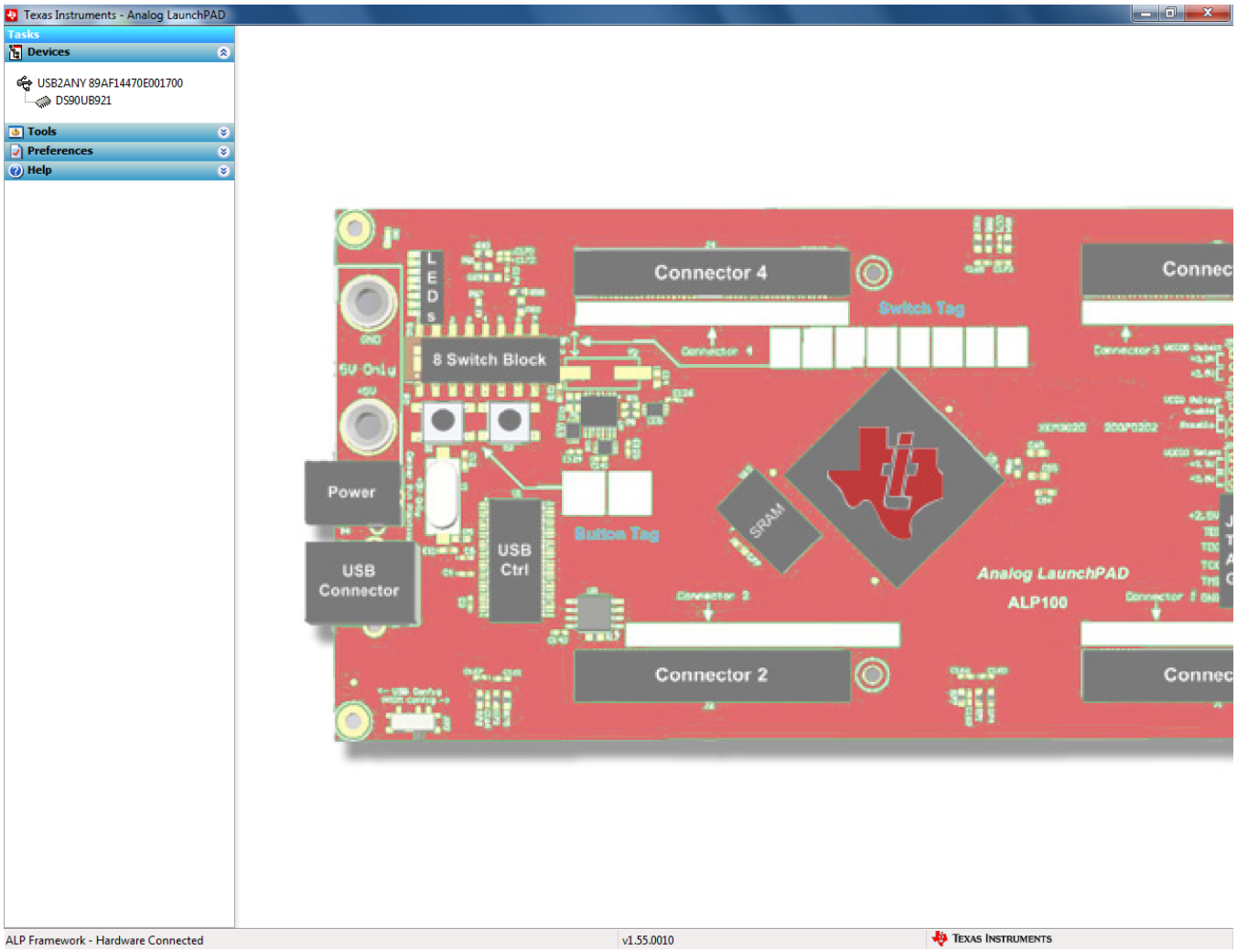

Figure 1-9. Initial ALP Screen

Copyright © 2016, Texas Instruments Incorporated

After selecting the DS90UB921-Q1, the following screen should appear.

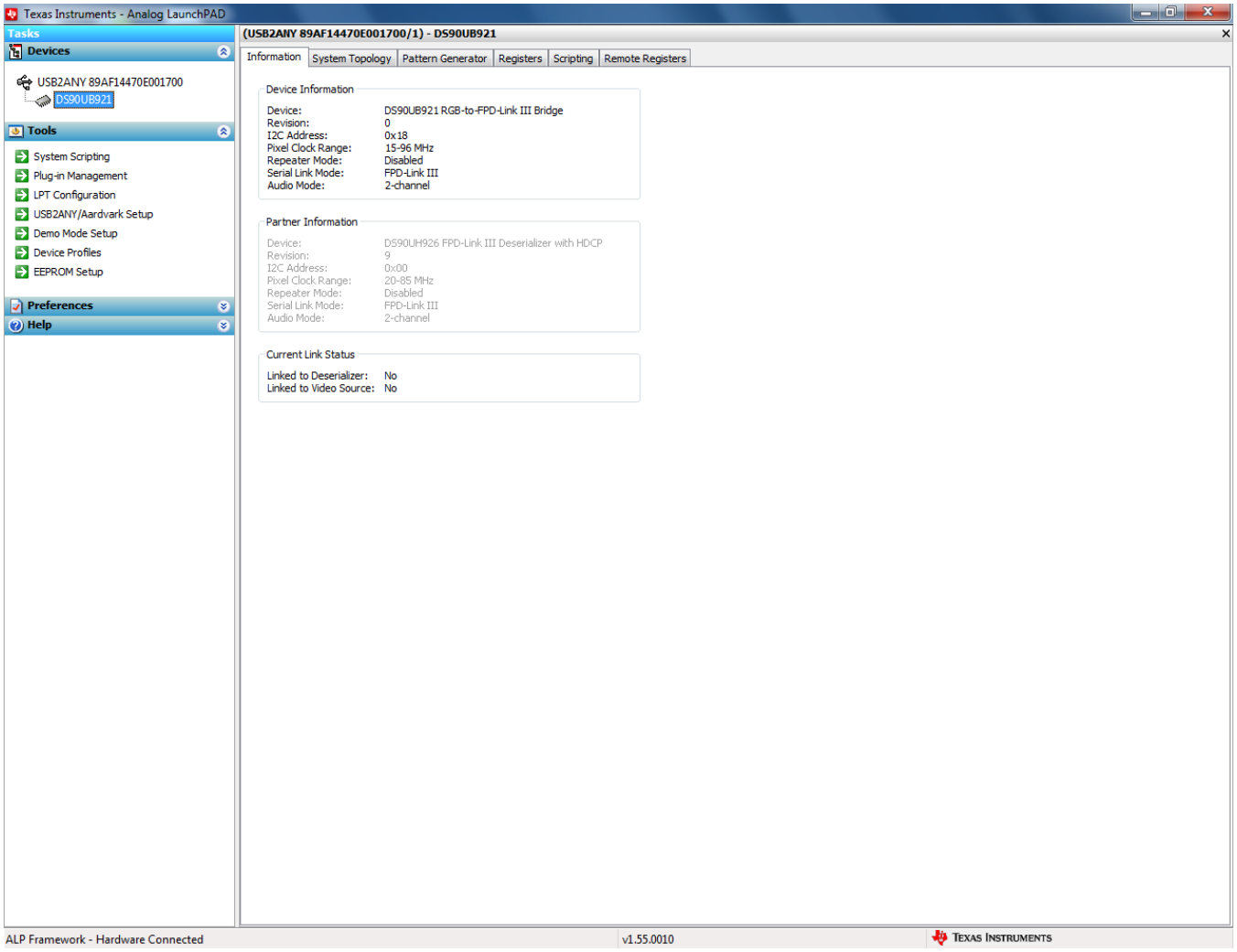

Figure 1-10. Follow-up Screen

Copyright © 2016, Texas Instruments Incorporated

1.12.5 Information Tab

The Information tab is shown below. Please note the device revision could be different.

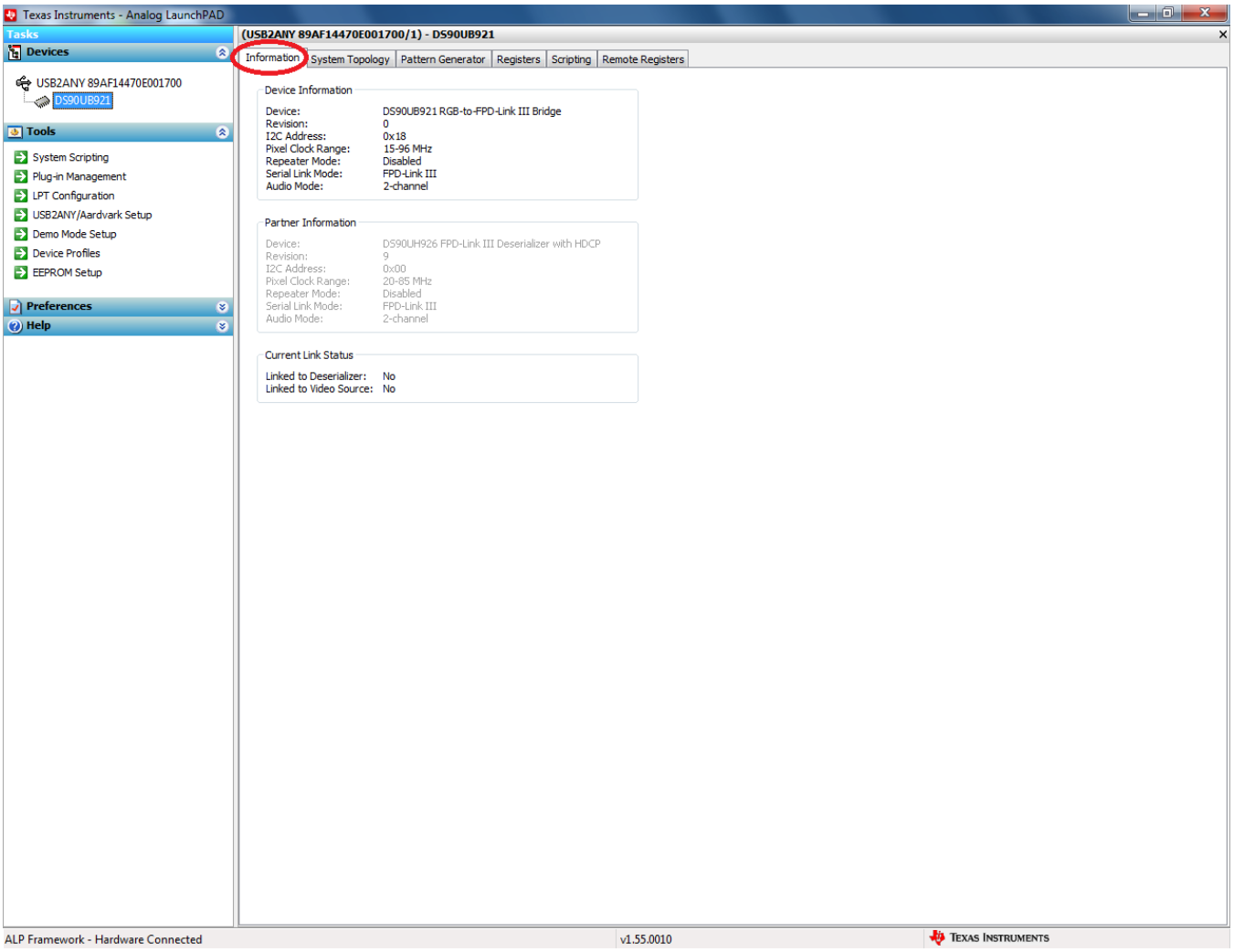

Figure 1-11. ALP Information Tab

Copyright © 2016, Texas Instruments Incorporated

1.12.6 Pattern Generator Tab

The SER Pattern Generator tab is shown below.

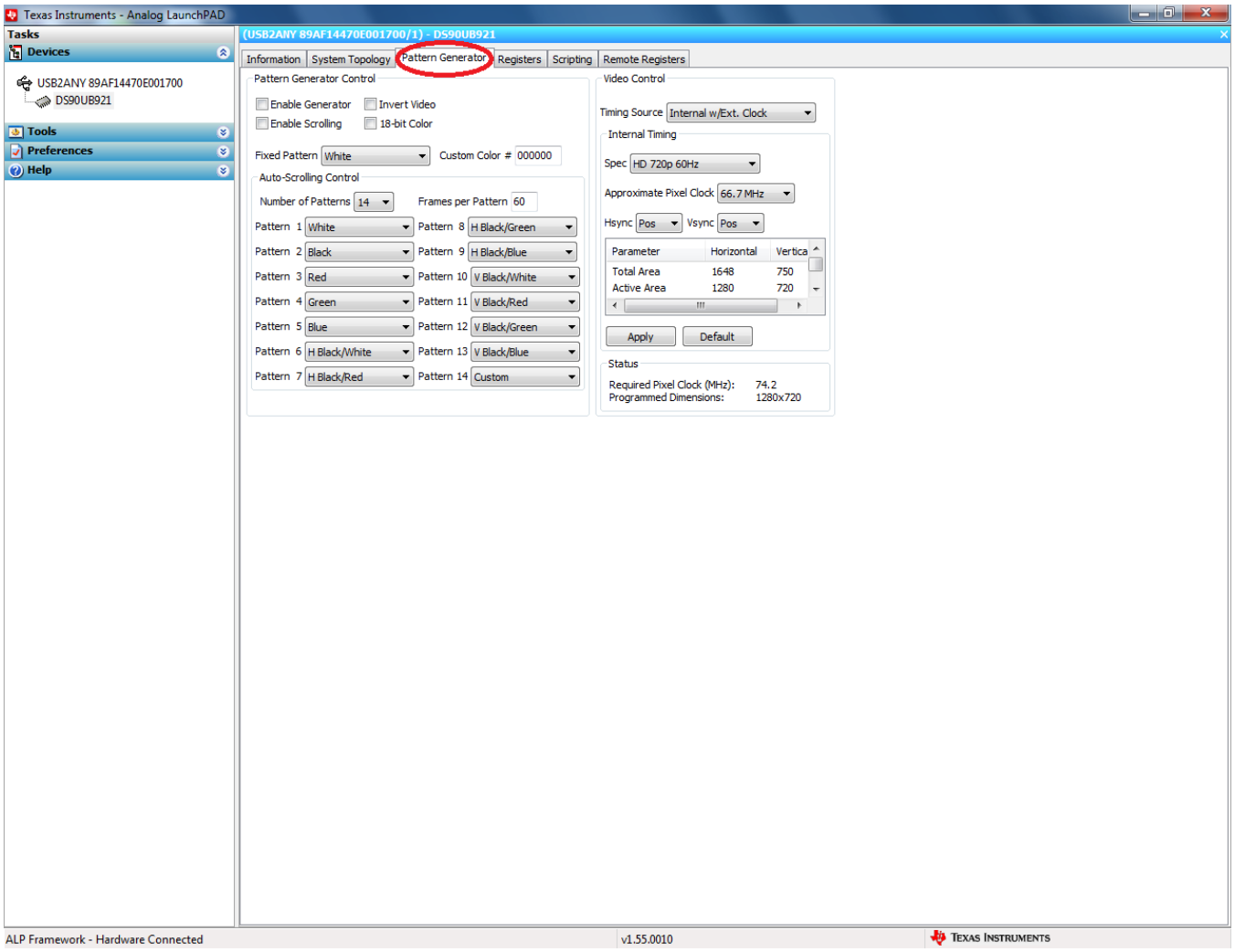

Figure 1-12. ALP Pattern Generator Tab

Copyright © 2016, Texas Instruments Incorporated

1.12.7 Registers Tab

The Registers tab is shown below.

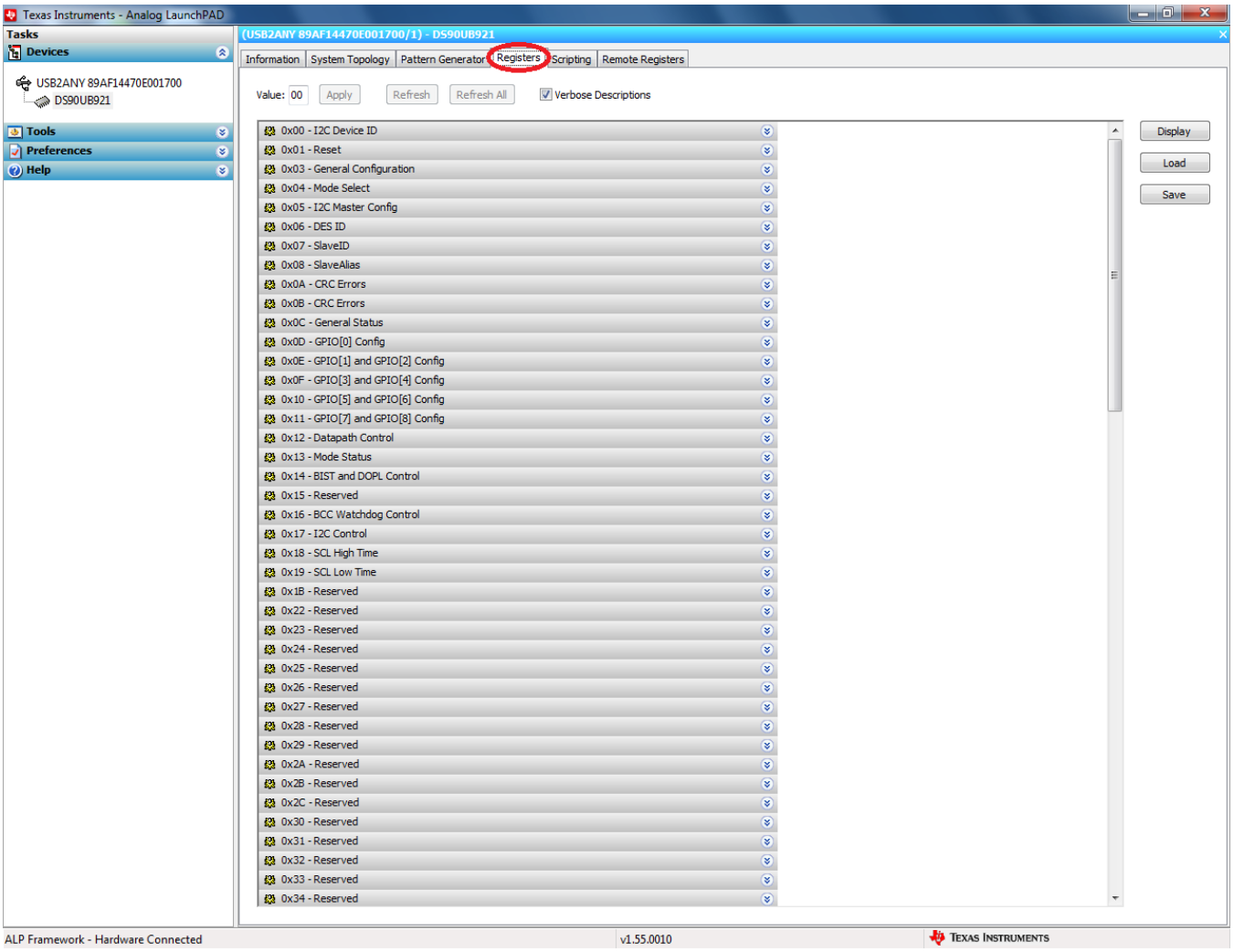

Figure 1-13. ALP Registers Tab

Copyright © 2016, Texas Instruments Incorporated

1.12.8 Registers Tab - Address 0x00 selected

Address 0x00 selected as shown below. Note that the “Value:” box, 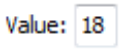

, will now show the hex value of that register.

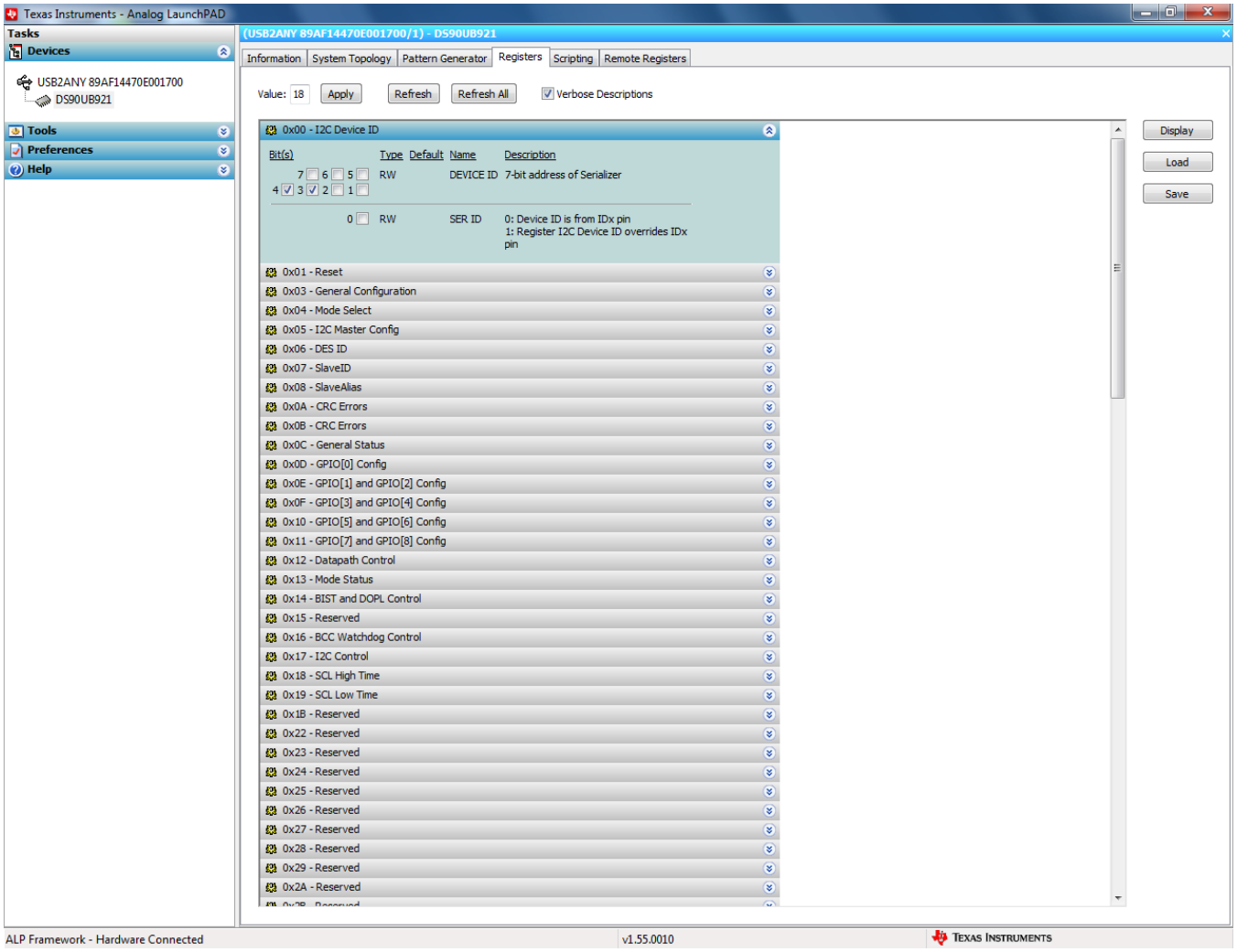

Figure 1-14. ALP Device ID Selected

Copyright © 2016, Texas Instruments Incorporated

By double clicking on the Address bar



or a single click on  . Address 0x00 expanded reveals contents by bits. Any register address displayed can be expanded.

Any RW Type register, 

, can be written into by writing the hex value into the “Value:” box, 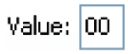

or putting the pointer into the individual register bit(s) box by a left mouse click to put a check mark (indicating a “1”) or unchecking to remove the check mark (indicating a “0”). Click the “Apply” button to write to the register, and “refresh” to see the new value of the selected (highlighted) register.

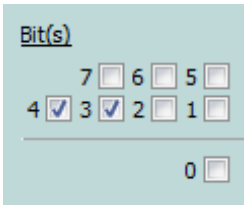

The box toggles on every mouse click.

Copyright © 2016, Texas Instruments Incorporated

1.12.9 Scripting Tab

The Scripting tab is shown below.

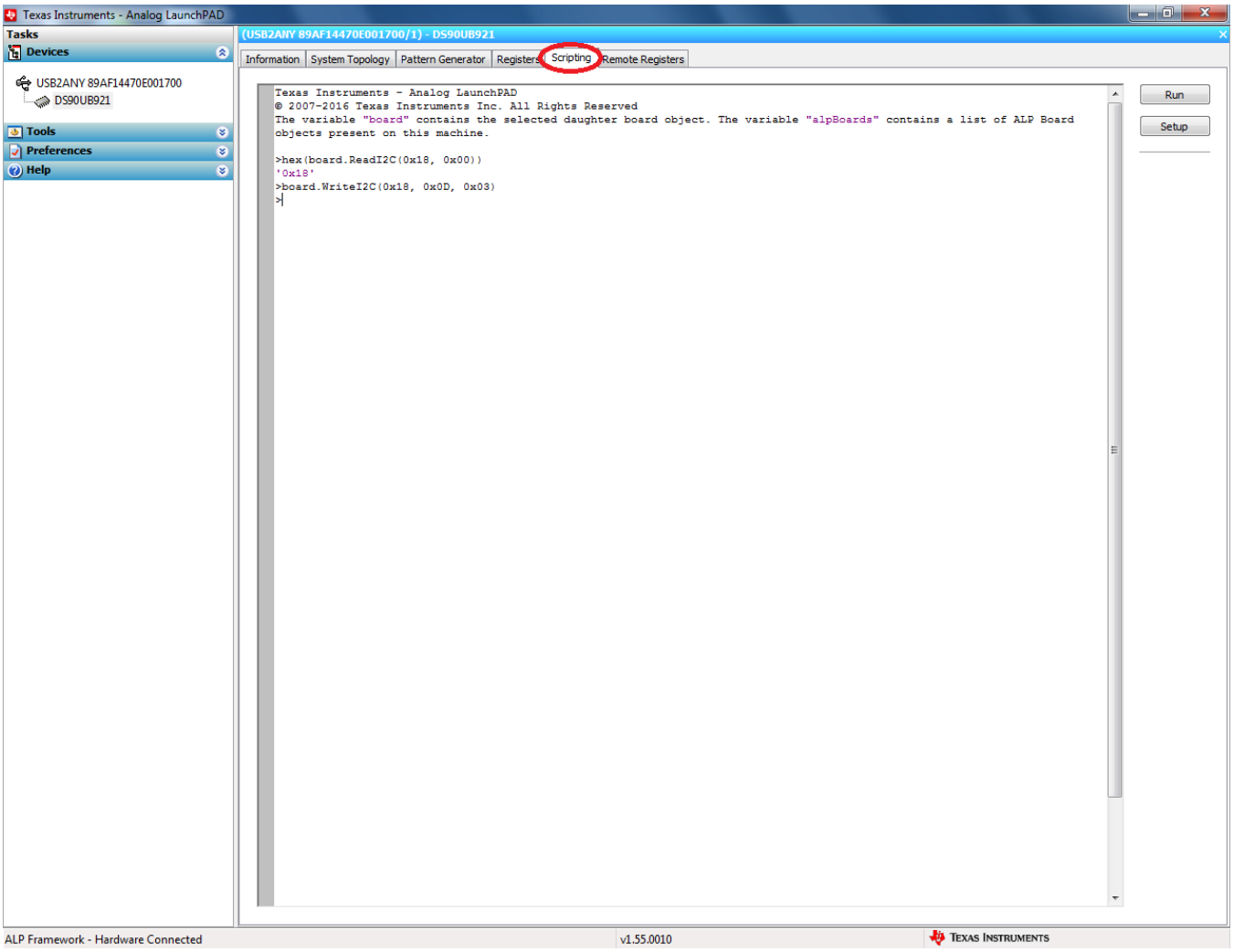

Figure 1-15. ALP Scripting Tab

The script window provides a full Python scripting environment which can be for running scripts and interacting with the device in an interactive or automated fashion.

WARNING

Directly interacting with devices either through register modifications or calling device support library functions can effect the performance and/or functionality of the user interface and may even crash the ALP Framework application.

Copyright © 2016, Texas Instruments Incorporated

1.13 Troubleshooting ALP Software

1.13.1 ALP Loads the Incorrect Profile

If ALP opens with the incorrect profile loaded the correct profile can be loaded from the USB2ANY/Aardvark Setup found under the tools menu.

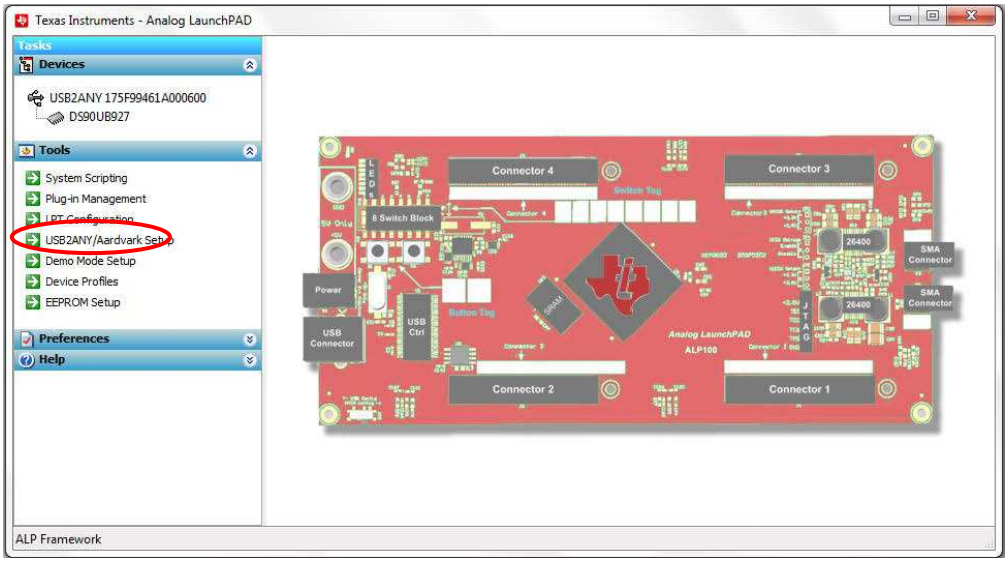

Figure 1-16. USB2ANY Setup

Highlight the incorrect profile in the Defined ALP Devices list and press the remove button.

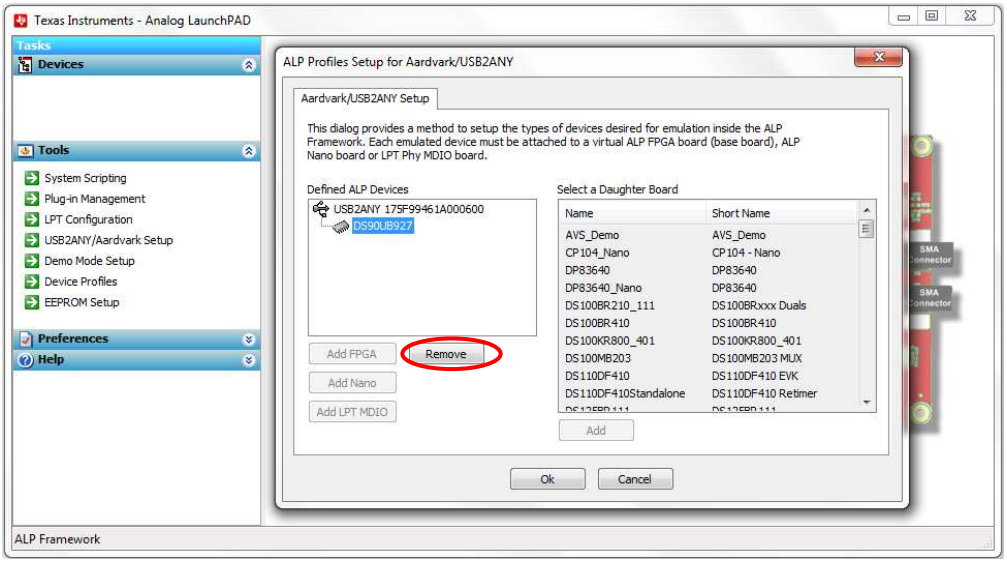

Figure 1-17. Remove Incorrect Profile

Copyright © 2016, Texas Instruments Incorporated

Find the correct profile under the Select a Daughter Board list, highlight the profile and press Add.

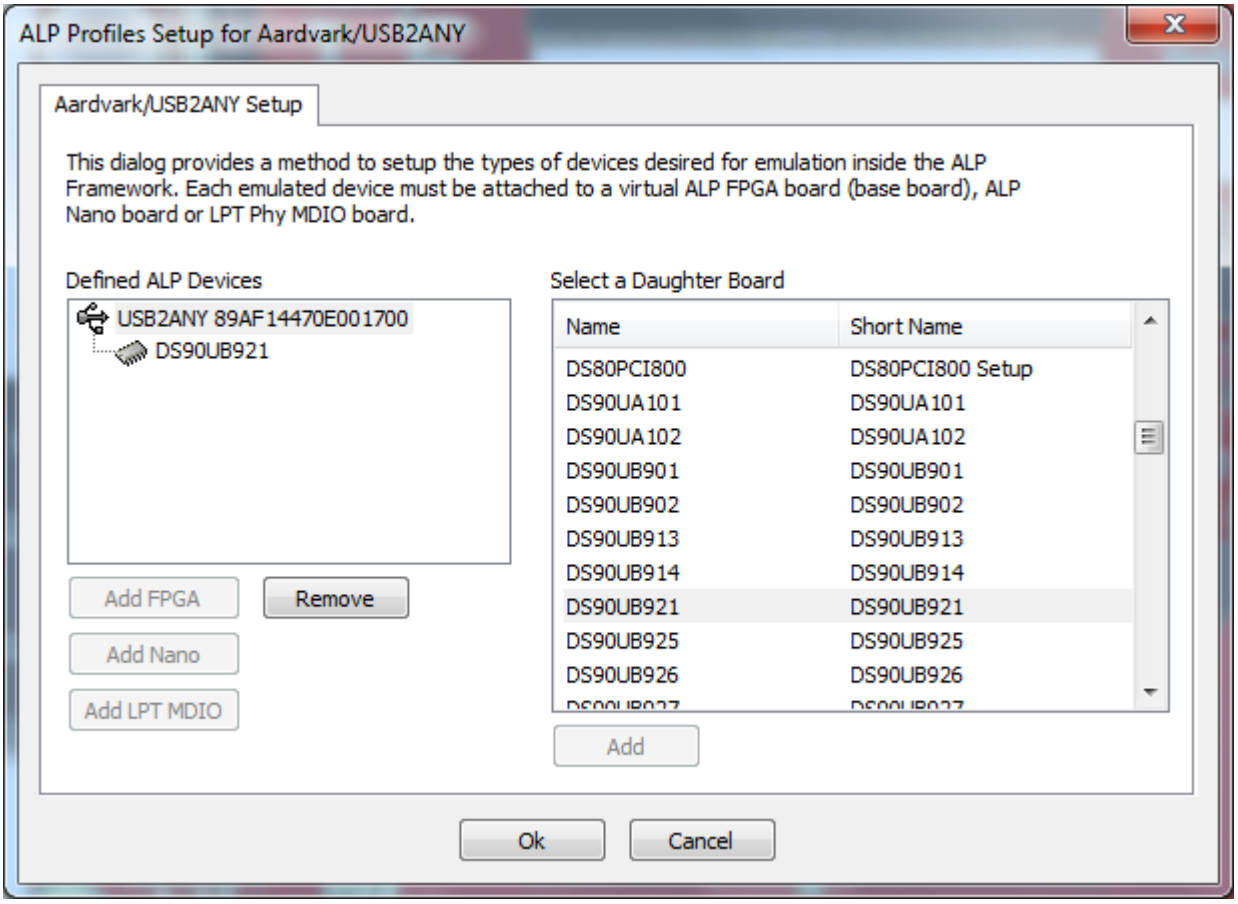

Figure 1-18. Add Correct Profile

Select Ok and the correct profile should now be loaded.

Copyright © 2016, Texas Instruments Incorporated

1.13.2 ALP does not detect the EVM

If the following window opens after starting the ALP software, double check the hardware setup.

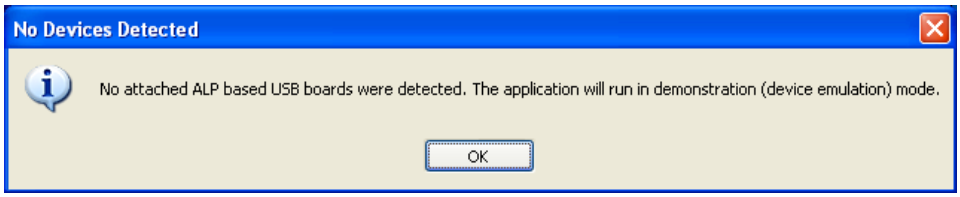

Figure 1-19. ALP No Devices Error

It may also be that the USB driver is not installed. Check the device manager. There should be a “HID-compliant device” under the “Human Interface Devices” as shown below.

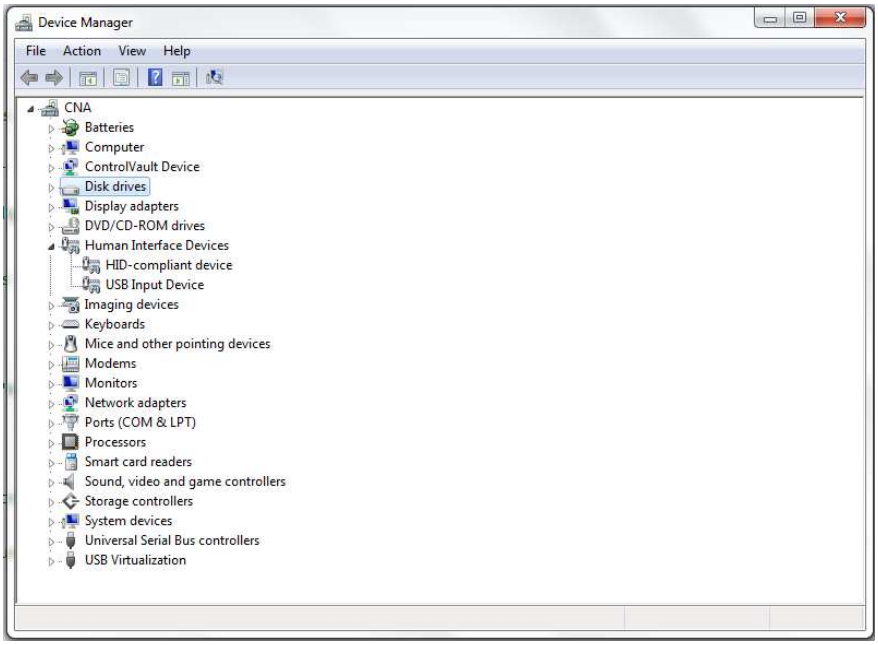

Figure 1-20. Windows 7, ALP USB Driver

Copyright © 2016, Texas Instruments Incorporated

The software should start with only “DS90UB921-Q1” in the “Devices” pull down menu. If there are more devices then the software is most likely in demo mode. When the ALP is operating in demo mode there is a “(Demo Mode)” indication in the lower left of the application status bar as shown below.

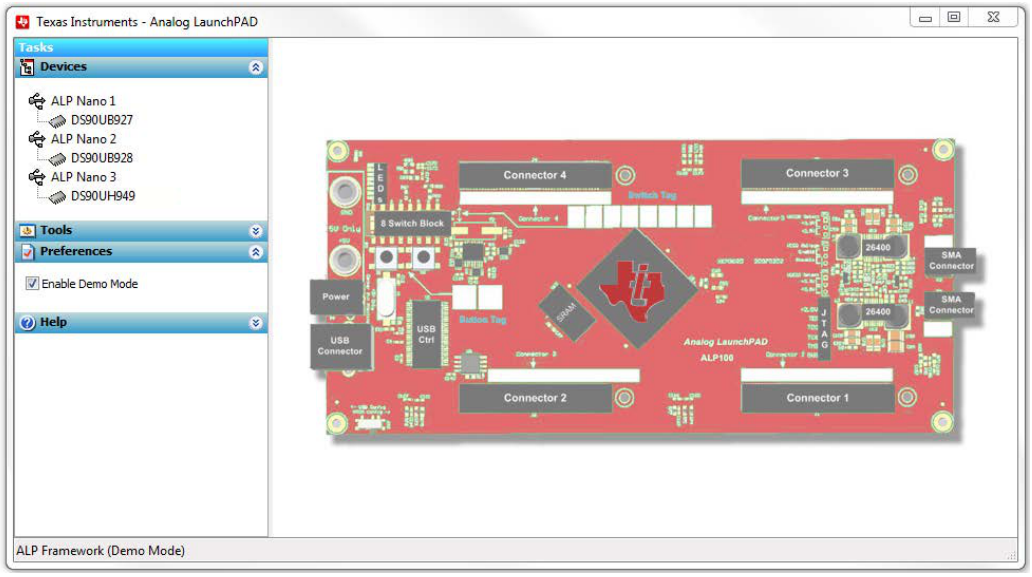

Figure 1-21. ALP in Demo Mode

Disable the demo mode by selecting the “Preferences” pull down menu and un-checking “Enable Demo Mode”.

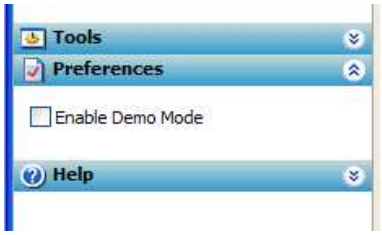

Figure 1-22. ALP Preferences Menu

After demo mode is disabled, the ALP software will poll the ALP hardware. The ALP software will update and have only “DS90UB921-Q1” under the “Devices” pull down menu.

Copyright © 2016, Texas Instruments Incorporated

1.14 Typical Connection and Test Equipment

The following is a list of typical test equipment that may be used to generate signals for the Serializer inputs:

1. Digital Video Source – for generation of specific display timing such as Digital Video Processor or Graphics Controller (GPU).
2. Any other signal generator / video source - This video generator may be used for video signal sources.
3. Any other signal / video generator that provides the correct input levels as specified in the datasheet.

The picture below shows a typical test set up using a Graphics Controller and display.

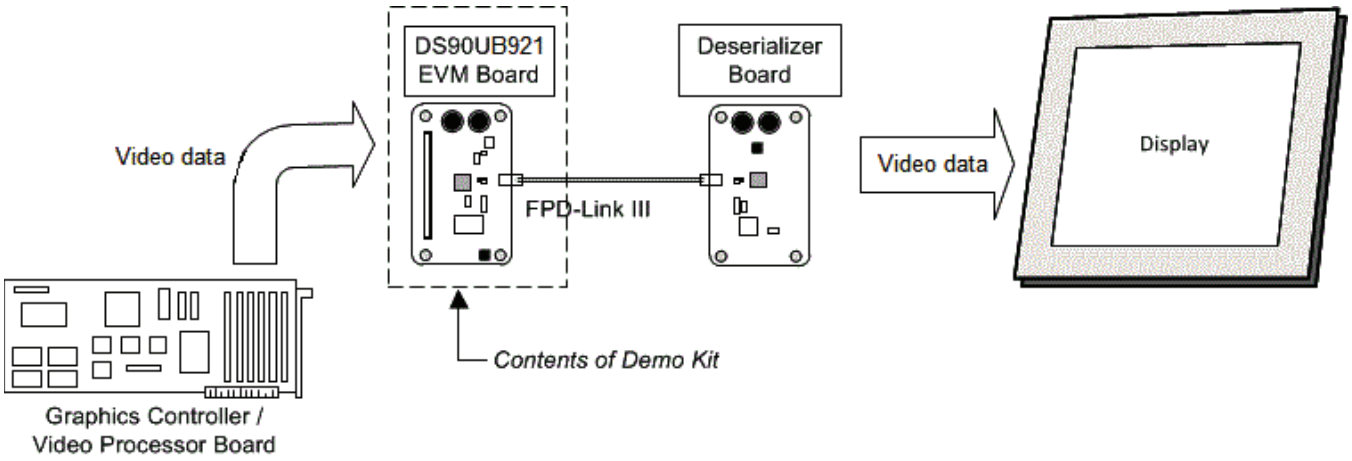

Figure 1-23. Typical Test Setup for Video Application

The picture below shows a typical test set up using a video generator and logic analyzer.

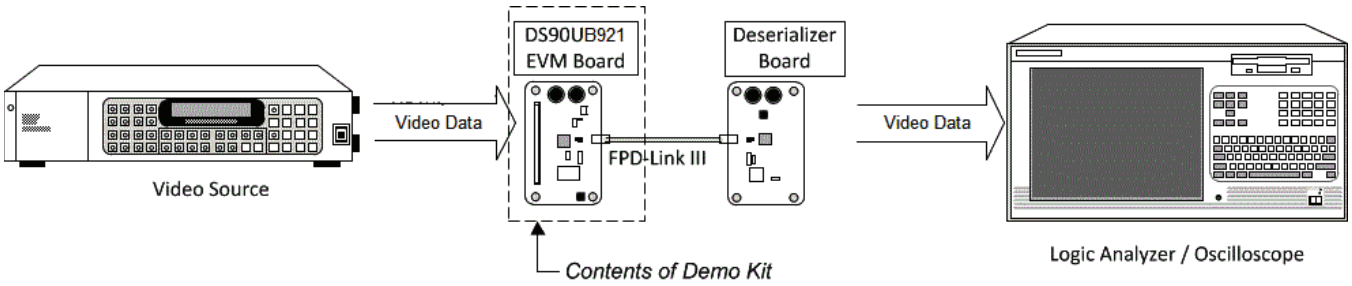

Figure 1-24. Typical Test Setup for Evaluation

Copyright © 2016, Texas Instruments Incorporated

1.15 Equipment References

NOTE: Please note that the following references are supplied only as a courtesy to our valued customers. It is not intended to be an endorsement of any particular equipment or supplier.

Digital Video Pattern Generator:

Astrodesign

www.astro-americas.com

Logic Analyzer:

keysight Technologies

www.keysight.com

Corelis CAS-1000-I2C/E I2C Bus Analyzer and Exerciser Products:

www.corelis.com/products/I2C-Analyzer.htm

Aardvark I2C/SPI Host Adapter Part Number: TP240141

www.totalphase.com/products/aardvark_i2cspi

1.16 Cable References

For optimal performance, we recommend Shielded Twisted Pair (STP) 100ohm differential impedance and 24 AWG (or larger diameter) cable for high-speed data applications. Also Single-Ended Coaxial (Coax)

Leoni Dacar 535-2 series cable:

Leoni Dacar 462 series cable:

www.leoni-automotive-cables.com

Rosenberger HSD connector:

www.rosenberger.de/en/Products/35_Automotive_HSD.php

Copyright © 2016, Texas Instruments Incorporated

Bill of Materials

Table 2-1. Bill of Materials

DESIGNATOR	DESCRIPTION	PART NUMBER	MANUFACTURER	QTY
!PCB1	Printed Circuit Board	SV601263	Any	1
C1	CAP, CERM, 0.1uF, 16V, +/-10%, X7R, 0402	GRM155R71C104KA88D	MuRata	1
C2	CAP, CERM, 0.1uF, 16V, +/-10%, X7R, 0402	GRM155R71C104KA88D	MuRata	1
C3	CAP, CERM, 10uF, 10V, +/-10%, X7R, 0805	GRM21BR71A106KE51L	MuRata	1
C4	CAP, CERM, 4.7uF, 16V, +/-10%, X7R, 0805	GRM21BR71C475KA73L	MuRata	1
C5	CAP, CERM, 0.01uF, 100V, +/-5%, X7R, 0603	06031C103JAT2A	AVX	1
C6	CAP, CERM, 0.1 µF, 16 V, +/- 10%, X5R, 0603	GRM188R61C104KA01D	MuRata	1
C7	CAP, CERM, 0.1 µF, 16 V, +/- 10%, X5R, 0603	GRM188R61C104KA01D	MuRata	1
C8	CAP, CERM, 4700 pF, 100 V, +/- 10%, X7R, 0805	08051C472KAT2A	AVX	1
C9	CAP, CERM, 4700 pF, 100 V, +/- 10%, X7R, 0805	08051C472KAT2A	AVX	1
C10	CAP, CERM, 4700 pF, 100 V, +/- 10%, X7R, 0805	08051C472KAT2A	AVX	1
C11	CAP, CERM, 4700 pF, 100 V, +/- 10%, X7R, 0805	08051C472KAT2A	AVX	1
C12	CAP, CERM, 4700 pF, 100 V, +/- 10%, X7R, 0805	08051C472KAT2A	AVX	1
C13	CAP, CERM, 4700 pF, 100 V, +/- 10%, X7R, 0805	08051C472KAT2A	AVX	1
C14	CAP, TA, 22uF, 20V, +/-20%, 0.7 ohm, SMD	293D226X0020D2TE3	Vishay-Sprague	1
C15	CAP, CERM, 1uF, 6.3V, +/-20%, X5R, 0402	C1005X5R0J105M	TDK	1
C16	CAP, TA, 2.2uF, 25V, +/-10%, 3.8 ohm, SMD	293D225X9025B2TE3	Vishay-Sprague	1
C17	CAP, CERM, 0.01uF, 100V, +/-10%, X7R, 0805	08051C103KAT2A	AVX	1
C18	CAP, CERM, 0.1uF, 16V, +/-10%, X7R, 0402	GRM155R71C104KA88D	MuRata	1
C19	CAP, CERM, 20 pF, 100 V, +/- 5%, C0G/NP0, 0603	GRM1885C2A200JA01D	MuRata	1
C20	CAP, CERM, 220 pF, 50 V, +/- 1%, C0G/NP0, 0603	06035A221FAT2A	AVX	1
C21	CAP, CERM, 20 pF, 100 V, +/- 5%, C0G/NP0, 0603	GRM1885C2A200JA01D	MuRata	1
C22	CAP, CERM, 200 pF, 50 V, +/- 5%, C0G/NP0, 0402	GRM1555C1H201JA01D	MuRata	1
C23	CAP, CERM, 2200 pF, 50 V, +/- 10%, X7R, 0603	C0603X222K5RACTU	Kemet	1
C24	CAP, CERM, 0.1uF, 16V, +/-10%, X7R, 0402	GRM155R71C104KA88D	MuRata	1
C25	CAP, CERM, 0.1uF, 16V, +/-10%, X7R, 0402	GRM155R71C104KA88D	MuRata	1
C26	CAP, CERM, 10uF, 10V, +/-10%, X7R, 0805	GRM21BR71A106KE51L	MuRata	1
C27	CAP, CERM, 0.1uF, 16V, +/-10%, X7R, 0402	GRM155R71C104KA88D	MuRata	1
C28	CAP, CERM, 0.1uF, 16V, +/-10%, X7R, 0402	GRM155R71C104KA88D	MuRata	1
C29	CAP, CERM, 0.47uF, 16V, +/-10%, X7R, 0603	GRM188R71C474KA88D	MuRata	1
C30	CAP, CERM, 10pF, 50V, +/-5%, C0G/NP0, 0402	GRM1555C1H100JA01D	MuRata	1
C31	CAP, CERM, 10pF, 50V, +/-5%, C0G/NP0, 0402	GRM1555C1H100JA01D	MuRata	1
C32	CAP, CERM, 0.1uF, 16V, +/-10%, X7R, 0402	GRM155R71C104KA88D	MuRata	1
C33	CAP, CERM, 1uF, 16V, +/-10%, X7R, 0603	C1608X7R1C105K	TDK	1
C34	CAP, CERM, 0.1uF, 16V, +/-10%, X7R, 0402	GRM155R71C104KA88D	MuRata	1
C35	CAP, CERM, 4.7 µF, 16 V, +/- 10%, X7R, AEC-Q200 Grade 1, 0805	GCM21BR71C475KA73L	MuRata	1
C36	CAP, CERM, 4.7 µF, 16 V, +/- 10%, X7R, AEC-Q200 Grade 1, 0805	GCM21BR71C475KA73L	MuRata	1

Copyright © 2016, Texas Instruments Incorporated

Table 2-1. Bill of Materials (continued)

DESIGNATOR	DESCRIPTION	PART NUMBER	MANUFACTURER	QTY
C37	CAP, CERM, 4.7 µF, 16 V, +/- 10%, X7R, AEC-Q200 Grade 1, 0805	GCM21BR71C475KA73L	MuRata	1
C38	CAP, CERM, 4.7 µF, 16 V, +/- 10%, X7R, AEC-Q200 Grade 1, 0805	GCM21BR71C475KA73L	MuRata	1
C39	CAP, CERM, 4.7 µF, 16 V, +/- 10%, X7R, AEC-Q200 Grade 1, 0805	GCM21BR71C475KA73L	MuRata	1
C40	CAP, CERM, 4.7 µF, 16 V, +/- 10%, X7R, AEC-Q200 Grade 1, 0805	GCM21BR71C475KA73L	MuRata	1
C41	CAP, CERM, 4.7 µF, 16 V, +/- 10%, X7R, AEC-Q200 Grade 1, 0805	GCM21BR71C475KA73L	MuRata	1
C42	CAP, CERM, 4.7 µF, 16 V, +/- 10%, X7R, AEC-Q200 Grade 1, 0805	GCM21BR71C475KA73L	MuRata	1
C43	CAP, CERM, 0.1uF, 16V, +/-10%, X7R, 0402	GRM155R71C104KA88D	MuRata	1
C44	CAP, TA, 22uF, 25V, +/-20%, 0.7 ohm, SMD	293D226X0025D2TE3	Vishay-Sprague	1
C45	CAP, TA, 2.2uF, 25V, +/-10%, 6.3 ohm, SMD	293D225X9025A2TE3	Vishay-Sprague	1
C46	CAP, CERM, 0.1uF, 16V, +/-10%, X7R, 0402	GRM155R71C104KA88D	MuRata	1
C47	CAP, CERM, 4.7 µF, 16 V, +/- 10%, X7R, AEC-Q200 Grade 1, 0805	GCM21BR71C475KA73L	MuRata	1
C48	CAP, CERM, 4.7 µF, 16 V, +/- 10%, X7R, AEC-Q200 Grade 1, 0805	GCM21BR71C475KA73L	MuRata	1
C49	CAP, CERM, 4.7 µF, 16 V, +/- 10%, X7R, AEC-Q200 Grade 1, 0805	GCM21BR71C475KA73L	MuRata	1
C50	CAP, CERM, 4.7 µF, 16 V, +/- 10%, X7R, AEC-Q200 Grade 1, 0805	GCM21BR71C475KA73L	MuRata	1
C51	CAP, CERM, 47uF, 16V, +/-20%, X5R, 1210	GRM32ER61C476ME15L	MuRata	1
C52	CAP, CERM, 10uF, 10V, +/-10%, X7R, 0805	GRM21BR71A106KE51L	MuRata	1
C53	CAP, CERM, 0.1uF, 16V, +/-10%, X7R, 0402	GRM155R71C104KA88D	MuRata	1
C54	CAP, CERM, 0.047 µF, 16 V, +/- 10%, X7R, 0402	GRM155R71C473KA01D	MuRata	1
C55	CAP, CERM, 0.47 µF, 25 V, +/- 10%, X7R, 0603	GRM188R71E474KA12D	MuRata	1
C56	CAP, CERM, 4.7 µF, 16 V, +/- 10%, X7R, AEC-Q200 Grade 1, 0805	GCM21BR71C475KA73L	MuRata	1
C57	CAP, CERM, 3300pF, 50V, +/-10%, X7R, 0402	GRM155R71H332KA01D	MuRata	1
C58	CAP, CERM, 1uF, 16V, +/-10%, X7R, 0603	C1608X7R1C105K	TDK	1
C59	CAP, CERM, 10 µF, 25 V, +/- 20%, X5R, 0603	GRM188R61E106MA73	MuRata	1
C60	CAP, CERM, 33 pF, 50 V, +/- 5%, C0G/NP0, 0603	06035A330JAT2A	AVX	1
C61	CAP, CERM, 22 µF, 35 V, +/- 20%, X5R, 1206_190	C3216X5R1V226M160AC	TDK	1
C62	CAP, CERM, 4.7 µF, 16 V, +/- 10%, X7R, AEC-Q200 Grade 1, 0805	GCM21BR71C475KA73L	MuRata	1
C63	CAP, CERM, 0.47 µF, 25 V, +/- 10%, X7R, 0603	GRM188R71E474KA12D	MuRata	1
C64	CAP, CERM, 0.047 µF, 16 V, +/- 10%, X7R, 0402	GRM155R71C473KA01D	MuRata	1
C65	CAP, CERM, 33 pF, 50 V, +/- 5%, C0G/NP0, 0603	06035A330JAT2A	AVX	1
C66	CAP, CERM, 22 µF, 35 V, +/- 20%, X5R, 1206_190	C3216X5R1V226M160AC	TDK	1
C67	CAP, CERM, 0.1 µF, 50 V, +/- 10%, C0G/NP0, 0402	C1005X7R1H104K	TDK	1
C68	CAP, CERM, 10 µF, 25 V, +/- 20%, X5R, 0603	GRM188R61E106MA73	MuRata	1
C69	CAP, CERM, 0.47 µF, 16 V, +/- 10%, X5R, 0402	GRM155R61C474KE01	MuRata	1
C70	CAP, TA, 22uF, 25V, +/-20%, 0.7 ohm, SMD	293D226X0025D2TE3	Vishay-Sprague	1
C71	CAP, TA, 22uF, 25V, +/-20%, 0.7 ohm, SMD	293D226X0025D2TE3	Vishay-Sprague	1
C72	CAP, CERM, 4.7uF, 16V, +/-10%, X7R, 0805	GRM21BR71C475KA73L	MuRata	1
C73	CAP, CERM, 0.1uF, 16V, +/-10%, X7R, 0402	GRM155R71C104KA88D	MuRata	1
C74	CAP, CERM, 0.1uF, 16V, +/-10%, X7R, 0402	GRM155R71C104KA88D	MuRata	1

Copyright © 2016, Texas Instruments Incorporated

Table 2-1. Bill of Materials (continued)

DESIGNATOR	DESCRIPTION	PART NUMBER	MANUFACTURER	QTY
C75	CAP, CERM, 10uF, 10V, +/-10%, X7R, 0805	GRM21BR71A106KE51L	MuRata	1
C76	CAP, CERM, 4.7uF, 16V, +/-10%, X7R, 0805	GRM21BR71C475KA73L	MuRata	1
C77	CAP, CERM, 0.1uF, 16V, +/-10%, X7R, 0402	GRM155R71C104KA88D	MuRata	1
C78	CAP, CERM, 0.1uF, 16V, +/-10%, X7R, 0402	GRM155R71C104KA88D	MuRata	1
C79	CAP, CERM, 10uF, 10V, +/-10%, X7R, 0805	GRM21BR71A106KE51L	MuRata	1
C80	CAP, CERM, 0.1 µF, 50 V, +/- 10%, X7R, AEC-Q200 Grade 1, 0402	GCM155R71H104KE02D	MuRata	1
C81	CAP, CERM, 0.1 µF, 50 V, +/- 10%, X7R, AEC-Q200 Grade 1, 0402	GCM155R71H104KE02D	MuRata	1
C82	CAP, CERM, 0.33 µF, 10 V, +/- 10%, X5R, 0402	C1005X5R1A334K050BB	TDK	1
C83	CAP, CERM, 0.1uF, 16V, +/-10%, X7R, 0402	GRM155R71C104KA88D	MuRata	1
C84	CAP, CERM, 0.15 µF, 10 V, +/- 10%, X5R, 0402	C1005X5R1A154K050BC	TDK	1
C85	CAP, CERM, 4.7pF, 25V, +/-5%, C0G/NP0, 0402	GRM1555C1E4R7CA01D	MuRata	1
C86	CAP, CERM, 4.7pF, 25V, +/-5%, C0G/NP0, 0402	GRM1555C1E4R7CA01D	MuRata	1
D1	LED, Green, SMD	150060VS75000	Wurth Elektronik eiSos	1
D2	LED, Green, SMD	150060VS75000	Wurth Elektronik eiSos	1
D3	LED, Green, SMD	150060VS75000	Wurth Elektronik eiSos	1
D4	LED, Green, SMD	150060VS75000	Wurth Elektronik eiSos	1
D5	LED, Green, SMD	150060VS75000	Wurth Elektronik eiSos	1
D6	LED, Orange, SMD	LTST-C190KFKT	Lite-On	1
D7	Diode, Zener, 7.5V, 550mW, SMB	1SMB5922BT3G	ON Semiconductor	1
D8	LED, Green, SMD	LTST-C190GKT	Lite-On	1
D9	Diode, Schottky, 40V, 1A, SOD-123	1N5819HW-7-F	Diodes Inc.	1
F1	Fuse, 7 A, 24 V, SMD	0429007.WRML	Littelfuse	1
H1	EMI SHIELD, 13.66 x 12.70 mm, SMT	BMI-S-201-F	Laird-Signal Integrity Products	1
J1	Header, 100mil, 2x1, Gold, TH	5-146261-1	TE Connectivity	1
J2	Header, 100mil, 2x1, Gold, TH	5-146261-1	TE Connectivity	1
J3	Header, 100mil, 2x1, Gold, TH	5-146261-1	TE Connectivity	1
J4	Header, 100mil, 3x1, Gold, TH	TSW-103-07-G-S	Samtec	1
J5	Header, 100mil, 2x1, Gold, TH	5-146261-1	TE Connectivity	1
J6	Header, 100mil, 2x1, Gold, TH	5-146261-1	TE Connectivity	1
J7	Connector, Receptacle, Mini-USB Type B, R/A, Top Mount SMT	1734035-2	TE Connectivity	1
J8	Header, 100mil, 2x1, Gold, TH	5-146261-1	TE Connectivity	1
J9	Header, 100mil, 7x2, Tin, TH	PEC07DAAN	Sullins Connector Solutions	1
J10	Header, 100mil, 5x2, Tin, TH	PEC05DAAN	Sullins Connector Solutions	1
J11	Header, 100mil, 2x1, Gold, TH	5-146261-1	TE Connectivity	1
J12	Header, 100mil, 2x1, Gold, TH	5-146261-1	TE Connectivity	1
J13	Connector, DC Jack 2.1X5.5 mm, TH	PJ-102A	CUI Inc.	1
J14	Header, 100mil, 3x1, Gold, TH	TSW-103-07-G-S	Samtec	1
J15	Header, 100mil, 2x1, Gold, TH	5-146261-1	TE Connectivity	1
J16	Header, 100mil, 2x1, Gold, TH	5-146261-1	TE Connectivity	1
J17	Header, 100mil, 3x2, Gold, TH	TSW-103-07-G-D	Samtec	1
J18	Header, 100mil, 2x1, Gold, TH	5-146261-1	TE Connectivity	1
J19	Header, 100mil, 2x1, Gold, TH	5-146261-1	TE Connectivity	1
J20	Header, 100mil, 2x1, Gold, TH	5-146261-1	TE Connectivity	1

Copyright © 2016, Texas Instruments Incorporated

Table 2-1. Bill of Materials (continued)

DESIGNATOR	DESCRIPTION	PART NUMBER	MANUFACTURER	QTY
J21	Header, 100mil, 4x2, Gold, TH	TSW-104-07-G-D	Samtec	1
J22	Header, 100mil, 2x1, Gold, TH	5-146261-1	TE Connectivity	1
J23	Standard Banana Jack, Insulated, Red	6091	Keystone	1
J24	Standard Banana Jack, Insulated, Black	6092	Keystone	1
J25	Standard Banana Jack, Insulated, Red	6091	Keystone	1
J26	Header, 100mil, 28x2, Gold, TH	TSW-128-07-G-D	Samtec	1
J27	Connector, RF, 50 Ohm, R/A, TH	59S20X-40ML5-Z	Rosenberger	1
J28	Connector, End launch SMA, 50 ohm, SMT	142-0701-851	Emerson Network Power	1
J29	Connector, End launch SMA, 50 ohm, SMT	142-0701-851	Emerson Network Power	1
J30	Header (friction lock), 100mil, 4x1, Gold, TH	0022112042	Molex	1
J31	Header, 100mil, 10x2, TH	PEC10DAAN	Sullins Connector Solutions	1
J32	Header, 100mil, 2x1, Gold, TH	5-146261-1	TE Connectivity	1
L1	Ferrite Bead, 1000 ohm @ 100 MHz, 0.35 A, 0402	BLM15AX102SN1D	MuRata	1
L2	Ferrite Bead, 60 ohm @ 100MHz, 0.8A, 0603	BK1608HS600-T	Taiyo Yuden	1
L6	Inductor, Shielded Drum Core, Ferrite, 4.7 µH, 4.2 A, 0.02 ohm, SMD	7440650047	Wurth Elektronik	1
L7	Ferrite Bead, 1000 ohm @ 100 MHz, 0.35 A, 0402	BLM15AX102SN1D	MuRata	1
L8	Inductor, Shielded, Ferrite, 2.2 µH, 1.23 A, 0.084 ohm, SMD	VLF302510MT-2R2M	TDK	1
L9	Ferrite Bead, 1000 ohm @ 100 MHz, 0.35 A, 0402	BLM15AX102SN1D	MuRata	1
L10	Inductor, Multilayer, Ferrite, 3.3 µH, 0.6 A, 0.143 ohm, SMD	MLP2520S3R3ST0S1	TDK	1
L11	Coupled inductor, 0.28 A, 0.41 ohm, +/- 25%, SMD	DLW21SN900HQ2L	MuRata	1
LBL?	Thermal Transfer Printable Labels, 1.250" W x 0.250" H - 10,000 per roll	THT-13-457-10	Brady	1
P1	HSD Right Angle Plug for PCB, TH	D4S20D-40ML5-Z	Rosenberger	1
Q1	MOSFET, N-CH, 50 V, 0.22 A, SOT-23	BSS138	Fairchild Semiconductor	1
Q2	MOSFET, N-CH, 50 V, 0.22 A, SOT-23	BSS138	Fairchild Semiconductor	1
R1	RES, 0 ohm, 5%, 0.063W, 0402	ERJ-2GE0R00X	Panasonic	1
R2	RES, 107k ohm, 1%, 0.063W, 0402	CRCW0402107KFKED	Vishay-Dale	1
R3	RES, 255k ohm, 1%, 0.063W, 0402	CRCW0402255KFKED	Vishay-Dale	1
R4	RES, 100k ohm, 1%, 0.1W, 0402	ERJ-2RKF1003X	Panasonic	1
R5	RES, 105k ohm, 1%, 0.063W, 0402	CRCW0402105KFKED	Vishay-Dale	1
R6	RES, 102k ohm, 1%, 0.063W, 0402	CRCW0402102KFKED	Vishay-Dale	1
R7	RES, 17.8k ohm, 1%, 0.063W, 0402	CRCW040217K8FKED	Vishay-Dale	1
R8	RES, 0 ohm, 5%, 0.063W, 0402	ERJ-2GE0R00X	Panasonic	1
R9	RES, 107k ohm, 1%, 0.063W, 0402	CRCW0402107KFKED	Vishay-Dale	1
R10	RES, 255k ohm, 1%, 0.063W, 0402	CRCW0402255KFKED	Vishay-Dale	1
R11	RES, 100k ohm, 1%, 0.1W, 0402	ERJ-2RKF1003X	Panasonic	1
R12	RES, 105k ohm, 1%, 0.063W, 0402	CRCW0402105KFKED	Vishay-Dale	1
R13	RES, 102k ohm, 1%, 0.063W, 0402	CRCW0402102KFKED	Vishay-Dale	1
R14	RES, 17.8k ohm, 1%, 0.063W, 0402	CRCW040217K8FKED	Vishay-Dale	1
R15	RES, 10.0 k, 1%, 0.063 W, 0402	CRCW040210K0FKED	Vishay-Dale	1
R16	RES, 17.8k ohm, 1%, 0.063W, 0402	CRCW040217K8FKED	Vishay-Dale	1
R17	RES, 102k ohm, 1%, 0.063W, 0402	CRCW0402102KFKED	Vishay-Dale	1
R18	RES, 75k ohm, 5%, 0.063W, 0402	CRCW040275K0JNED	Vishay-Dale	1
R19	RES, 140k ohm, 1%, 0.063W, 0402	CRCW0402140KFKED	Vishay-Dale	1
R20	RES, 255k ohm, 1%, 0.063W, 0402	CRCW0402255KFKED	Vishay-Dale	1

Copyright © 2016, Texas Instruments Incorporated

Table 2-1. Bill of Materials (continued)

DESIGNATOR	DESCRIPTION	PART NUMBER	MANUFACTURER	QTY
R21	RES, 107k ohm, 1%, 0.063W, 0402	CRCW0402107KFKED	Vishay-Dale	1
R22	RES, 0 ohm, 5%, 0.063W, 0402	ERJ-2GE0R00X	Panasonic	1
R23	RES, 10.0 k, 1%, 0.063 W, 0402	CRCW040210K0FKED	Vishay-Dale	1
R24	RES, 17.8k ohm, 1%, 0.063W, 0402	CRCW040217K8FKED	Vishay-Dale	1
R25	RES, 102k ohm, 1%, 0.063W, 0402	CRCW0402102KFKED	Vishay-Dale	1
R26	RES, 75k ohm, 5%, 0.063W, 0402	CRCW040275K0JNED	Vishay-Dale	1
R27	RES, 140k ohm, 1%, 0.063W, 0402	CRCW0402140KFKED	Vishay-Dale	1
R28	RES, 255k ohm, 1%, 0.063W, 0402	CRCW0402255KFKED	Vishay-Dale	1
R29	RES, 107k ohm, 1%, 0.063W, 0402	CRCW0402107KFKED	Vishay-Dale	1
R30	RES, 0 ohm, 5%, 0.063W, 0402	ERJ-2GE0R00X	Panasonic	1
R31	RES, 10.0 k, 1%, 0.063 W, 0402	CRCW040210K0FKED	Vishay-Dale	1
R32	RES, 10.0 k, 1%, 0.063 W, 0402	CRCW040210K0FKED	Vishay-Dale	1
R33	RES, 10.0 k, 1%, 0.063 W, 0402	CRCW040210K0FKED	Vishay-Dale	1
R34	RES, 0, 5%, 0.05 W, 0201	ERJ-1GE0R00C	Panasonic	1
R35	RES, 49.9, 1%, 0.05 W, 0201	ERJ-1GEF49R9C	Panasonic	1
R36	RES, 49.9, 1%, 0.05 W, 0201	ERJ-1GEF49R9C	Panasonic	1
R37	RES, 0, 5%, 0.05 W, 0201	ERJ-1GE0R00C	Panasonic	1
R38	RES, 49.9, 1%, 0.05 W, 0201	ERJ-1GEF49R9C	Panasonic	1
R39	RES, 0, 5%, 0.05 W, 0201	ERJ-1GE0R00C	Panasonic	1
R40	RES, 49.9, 1%, 0.05 W, 0201	ERJ-1GEF49R9C	Panasonic	1
R41	RES, 49.9, 1%, 0.05 W, 0201	ERJ-1GEF49R9C	Panasonic	1
R42	RES, 49.9, 1%, 0.05 W, 0201	ERJ-1GEF49R9C	Panasonic	1
R43	RES, 49.9, 1%, 0.05 W, 0201	ERJ-1GEF49R9C	Panasonic	1
R44	RES, 49.9, 1%, 0.05 W, 0201	ERJ-1GEF49R9C	Panasonic	1
R45	RES, 49.9, 1%, 0.05 W, 0201	ERJ-1GEF49R9C	Panasonic	1
R46	RES, 49.9, 1%, 0.05 W, 0201	ERJ-1GEF49R9C	Panasonic	1
R47	RES, 49.9, 1%, 0.05 W, 0201	ERJ-1GEF49R9C	Panasonic	1
R48	RES, 4.7k ohm, 5%, 0.063W, 0402	CRCW04024K70JNED	Vishay-Dale	1
R49	RES, 49.9, 1%, 0.05 W, 0201	ERJ-1GEF49R9C	Panasonic	1
R50	RES, 49.9, 1%, 0.05 W, 0201	ERJ-1GEF49R9C	Panasonic	1
R51	RES, 49.9, 1%, 0.05 W, 0201	ERJ-1GEF49R9C	Panasonic	1
R52	RES, 49.9, 1%, 0.05 W, 0201	ERJ-1GEF49R9C	Panasonic	1
R53	RES, 0 ohm, 5%, 0.063W, 0402	ERJ-2GE0R00X	Panasonic	1
R54	RES, 49.9, 1%, 0.05 W, 0201	ERJ-1GEF49R9C	Panasonic	1
R55	RES, 49.9, 1%, 0.05 W, 0201	ERJ-1GEF49R9C	Panasonic	1
R56	RES, 0 ohm, 5%, 0.063W, 0402	ERJ-2GE0R00X	Panasonic	1
R57	RES, 49.9, 1%, 0.05 W, 0201	ERJ-1GEF49R9C	Panasonic	1
R58	RES, 49.9, 1%, 0.05 W, 0201	ERJ-1GEF49R9C	Panasonic	1
R59	RES, 49.9, 1%, 0.05 W, 0201	ERJ-1GEF49R9C	Panasonic	1
R60	RES, 49.9, 1%, 0.05 W, 0201	ERJ-1GEF49R9C	Panasonic	1
R61	RES, 49.9, 1%, 0.05 W, 0201	ERJ-1GEF49R9C	Panasonic	1
R62	RES, 49.9, 1%, 0.05 W, 0201	ERJ-1GEF49R9C	Panasonic	1
R63	RES, 49.9, 1%, 0.05 W, 0201	ERJ-1GEF49R9C	Panasonic	1
R64	RES, 0 ohm, 5%, 0.063W, 0402	ERJ-2GE0R00X	Panasonic	1
R65	RES, 49.9, 1%, 0.05 W, 0201	ERJ-1GEF49R9C	Panasonic	1
R66	RES, 49.9, 1%, 0.05 W, 0201	ERJ-1GEF49R9C	Panasonic	1
R67	RES, 49.9, 1%, 0.05 W, 0201	ERJ-1GEF49R9C	Panasonic	1

Copyright © 2016, Texas Instruments Incorporated

Table 2-1. Bill of Materials (continued)

DESIGNATOR	DESCRIPTION	PART NUMBER	MANUFACTURER	QTY
R68	RES, 49.9, 1%, 0.05 W, 0201	ERJ-1GEF49R9C	Panasonic	1
R69	RES, 470 ohm, 5%, 0.063W, 0402	CRCW0402470RJNED	Vishay-Dale	1
R70	RES, 2.4 k, 5%, 0.063 W, 0402	CRCW04022K40JNED	Vishay-Dale	1
R71	RES, 2.4 k, 5%, 0.063 W, 0402	CRCW04022K40JNED	Vishay-Dale	1
R72	RES, 220, 5%, 0.063 W, 0402	CRCW0402220RJNED	Vishay-Dale	1
R73	RES, 220, 5%, 0.063 W, 0402	CRCW0402220RJNED	Vishay-Dale	1
R74	RES, 180, 5%, 0.063 W, 0402	CRCW0402180RJNED	Vishay-Dale	1
R75	RES, 2.4 k, 5%, 0.063 W, 0402	CRCW04022K40JNED	Vishay-Dale	1
R76	RES, 2.4 k, 5%, 0.063 W, 0402	CRCW04022K40JNED	Vishay-Dale	1
R77	RES, 180, 5%, 0.063 W, 0402	CRCW0402180RJNED	Vishay-Dale	1
R78	RES, 100k ohm, 5%, 0.063W, 0402	CRCW0402100KJNED	Vishay-Dale	1
R79	RES, 0, 5%, 0.1 W, 0603	CRCW06030000Z0EA	Vishay-Dale	1
R80	RES, 33 ohm, 5%, 0.063W, 0402	CRCW040233R0JNED	Vishay-Dale	1
R81	RES, 33 ohm, 5%, 0.063W, 0402	CRCW040233R0JNED	Vishay-Dale	1
R82	RES, 1.5 k, 5%, 0.063 W, 0402	CRCW04021K50JNED	Vishay-Dale	1
R83	RES, 33k ohm, 5%, 0.063W, 0402	CRCW040233K0JNED	Vishay-Dale	1
R84	RES, 1.2 M, 5%, 0.1 W, 0603	CRCW06031M20JNEA	Vishay-Dale	1
R85	RES, 0, 5%, 0.063 W, 0402	CRCW04020000Z0ED	Vishay-Dale	1
R86	RES, 33k ohm, 5%, 0.063W, 0402	CRCW040233K0JNED	Vishay-Dale	1
R87	RES, 200 ohm, 5%, 0.063W, 0402	CRCW0402200RJNED	Vishay-Dale	1
R88	RES, 0, 5%, 0.063 W, 0402	RC0402JR-070RL	Yageo America	1
R89	RES, 0, 5%, 0.063 W, 0402	RC0402JR-070RL	Yageo America	1
R90	RES, 124k ohm, 1%, 0.063W, 0402	CRCW0402124KFKED	Vishay-Dale	1
R91	RES, 22.1k ohm, 1%, 0.063W, 0402	CRCW040222K1FKED	Vishay-Dale	1
R92	RES, 100k ohm, 5%, 0.063W, 0402	CRCW0402100KJNED	Vishay-Dale	1
R93	RES, 10.0 k, 1%, 0.063 W, 0402	CRCW040210K0FKED	Vishay-Dale	1
R94	RES, 0 ohm, 5%, 0.063W, 0402	ERJ-2GE0R00X	Panasonic	1
R95	RES, 3.24k ohm, 1%, 0.063W, 0402	CRCW04023K24FKED	Vishay-Dale	1
R96	RES, 806 k, 0.1%, 0.125 W, 0805	RT0805BRD07806KL	Yageo America	1
R97	RES, 10.0 k, 1%, 0.063 W, 0402	CRCW040210K0FKED	Vishay-Dale	1
R98	RES, 180 k, 0.1%, 0.1 W, 0603	RG1608P-184-B-T5	Susumu Co Ltd	1
R99	RES, 0 ohm, 5%, 0.063W, 0402	ERJ-2GE0R00X	Panasonic	1
R100	RES, 10.0 k, 1%, 0.063 W, 0402	CRCW040210K0FKED	Vishay-Dale	1
R101	RES, 361 k, 0.1%, 0.1 W, 0603	RT0603BRD07361KL	Yageo America	1
R102	RES, 10.0 k, 1%, 0.063 W, 0402	CRCW040210K0FKED	Vishay-Dale	1
R103	RES, 10.0 k, 1%, 0.063 W, 0402	CRCW040210K0FKED	Vishay-Dale	1
R104	RES, 180 k, 0.1%, 0.1 W, 0603	RG1608P-184-B-T5	Susumu Co Ltd	1
R105	RES, 0 ohm, 5%, 0.063W, 0402	ERJ-2GE0R00X	Panasonic	1
R106	RES, 29.4 k, 1%, 0.063 W, 0402	CRCW040229K4FKED	Vishay-Dale	1
R107	RES, 10.0 k, 1%, 0.063 W, 0402	CRCW040210K0FKED	Vishay-Dale	1
R108	RES, 3.24k ohm, 1%, 0.063W, 0402	CRCW04023K24FKED	Vishay-Dale	1
R109	RES, 100k ohm, 5%, 0.063W, 0402	CRCW0402100KJNED	Vishay-Dale	1
R110	RES, 0 ohm, 5%, 0.063W, 0402	ERJ-2GE0R00X	Panasonic	1
R111	RES, 0, 5%, 0.1 W, 0603	CRCW06030000Z0EA	Vishay-Dale	1
R112	RES, 100k ohm, 5%, 0.063W, 0402	CRCW0402100KJNED	Vishay-Dale	1
R113	RES, 0 ohm, 5%, 0.063W, 0402	ERJ-2GE0R00X	Panasonic	1
R114	RES, 0, 5%, 0.1 W, 0603	CRCW06030000Z0EA	Vishay-Dale	1

Copyright © 2016, Texas Instruments Incorporated

Table 2-1. Bill of Materials (continued)

DESIGNATOR	DESCRIPTION	PART NUMBER	MANUFACTURER	QTY
R115	RES, 4.7k ohm, 5%, 0.063W, 0402	CRCW04024K70JNED	Vishay-Dale	1
R116	RES, 4.7k ohm, 5%, 0.063W, 0402	CRCW04024K70JNED	Vishay-Dale	1
R117	RES, 49.9 ohm, 1%, 0.063W, 0402	CRCW040249R9FKED	Vishay-Dale	1
R118	RES, 0 ohm, 5%, 0.063W, 0402	ERJ-2GE0R00X	Panasonic	1
R119	RES, 0 ohm, 5%, 0.063W, 0402	ERJ-2GE0R00X	Panasonic	1
R121	RES, 0, 5%, 0.05 W, 0201	ERJ-1GE0R00C	Panasonic	1
R122	RES, 0, 5%, 0.05 W, 0201	ERJ-1GE0R00C	Panasonic	1
R123	RES, 0, 5%, 0.05 W, 0201	ERJ-1GE0R00C	Panasonic	1
R124	RES, 0, 5%, 0.05 W, 0201	ERJ-1GE0R00C	Panasonic	1
R125	RES, 0, 5%, 0.05 W, 0201	ERJ-1GE0R00C	Panasonic	1
R126	RES, 0, 5%, 0.05 W, 0201	ERJ-1GE0R00C	Panasonic	1
S1	Switch, Slide, SPST 8 poles, SMT	219-8MST	CTS Electrocomponents	1
S2	Switch, Slide, SPST 8 poles, SMT	219-8MST	CTS Electrocomponents	1
S3	Switch, Normally open, 2.3N force, 200k operations, SMD	KSR221GLFS	C and K Components	1
S4	Switch, SPST, 2 Pos, 25mA, 24VDC, SMD	218-2LPST	CTS Electrocomponents	1
S5	Switch, Normally open, 2.3N force, 200k operations, SMD	KSR221GLFS	C and K Components	1
SH-J11	Shunt, 100mil, Gold plated, Black	969102-0000-DA	3M	1
SH-J12	Shunt, 100mil, Gold plated, Black	969102-0000-DA	3M	1
SH-J19	Shunt, 100mil, Gold plated, Black	969102-0000-DA	3M	1
SH-J22	Shunt, 100mil, Gold plated, Black	969102-0000-DA	3M	1
T1	Common Mode Filter for Power Line	ACM9070-701-2PL	TDK	1
U1	5 - 96 MHz 24-bit Color FPD-Link III Serializer with Bidirectional Control Channel, RHS0048A	DS90UB921TRHSRQ1	Texas Instruments	1
U2	Single Output High PSRR LDO, 500 mA, Fixed 3.3 V Output, 2.7 to 6.5 V Input, with Low IQ, 8-pin SON (DRB), -40 to 125 degC, Green (RoHS & no Sb/Br)	TPS73533DRBT	Texas Instruments	1
U3	4-CHANNEL ESD-PROTECTION ARRAY FOR HIGH-SPEED DATA INTERFACES, DRY006A	TPD4E004DRYR	Texas Instruments	1
U4	Mixed Signal MicroController, PN0080A	MSP430F5529IPN	Texas Instruments	1
U5	4.5V to 18V Input, 2-A Synchronous Step-Down SWIFT™ Converter, PWP0014E	TPS54225PWPR	Texas Instruments	1
U6	2.25MHz 2x800mA Dual Step Down Converter In Small 3x3mm QFN Package, DRC0010J	TPS62410QDRCRQ1	Texas Instruments	1
U7	1A Low Dropout Adjustable Regulator, 8-pin LLP, Pb-Free	LM2941LD/NOPB	Texas Instruments	1
U8	Dual Output LDO, 1 A, Fixed 1.8, 3.3 V Output, 2.7 to 10 V Input, 28-pin HTSSOP (PWP), -40 to 125 degC, Green (RoHS & no Sb/Br)	TPS767D318PWP	Texas Instruments	1
U9	Low-Capacitance + / - 15 kV ESD-Protection Array for High-Speed Data Interfaces, 2 Channels, -40 to +85 degC, 5-pin SOT (DRL), Green (RoHS & no Sb/Br)	TPD2E001DRLR	Texas Instruments	1
X1	OSC, 96 MHz, 3.3 Vdc, SMD	FXO-HC736R-96	Fox Electronics	1
Y1	Crystal, 24.000MHz, 20pF, SMD	ECS-240-20-5PX-TR	ECS Inc.	1

Copyright © 2016, Texas Instruments Incorporated

EVM PCB Schematics

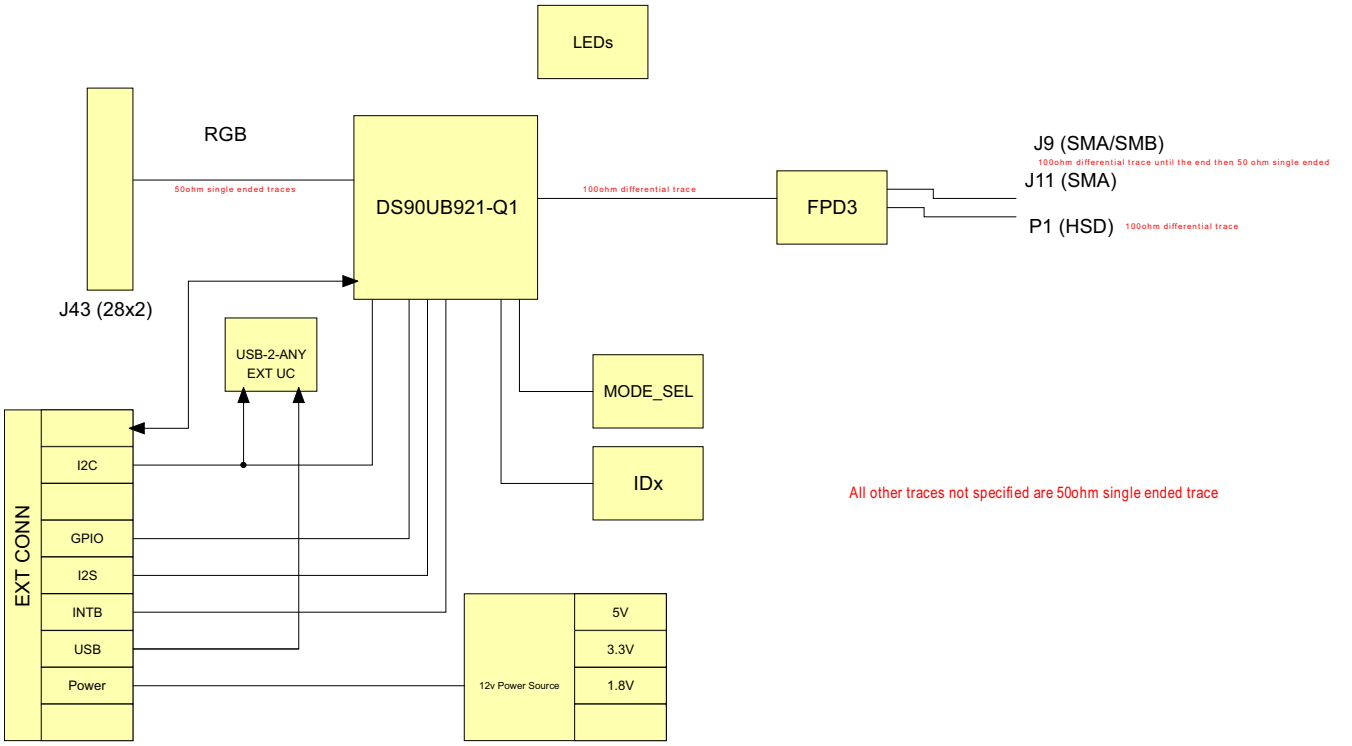

Copyright © 2016, Texas Instruments Incorporated

Copyright © 2016, Texas Instruments Incorporated

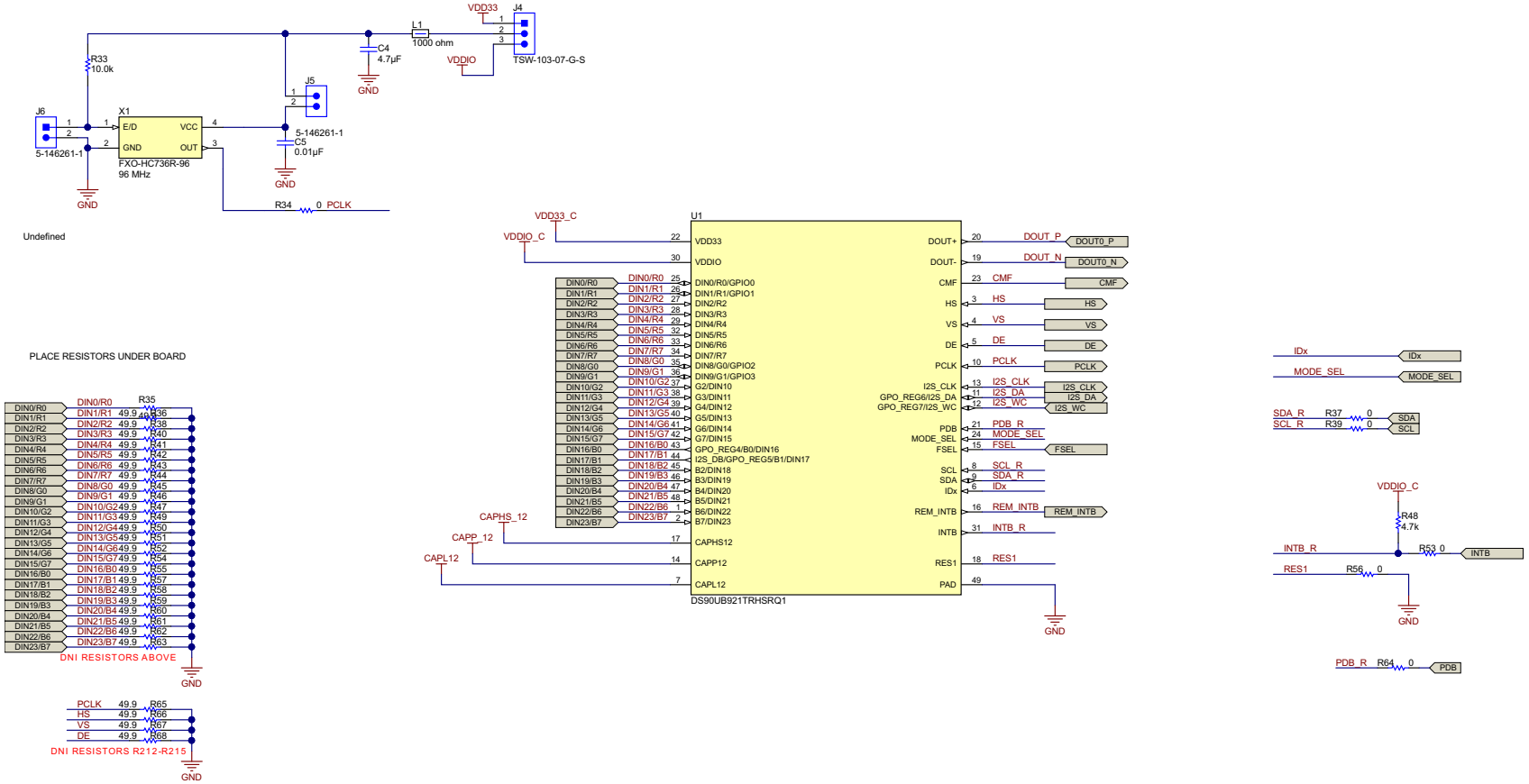

Copyright © 2016, Texas Instruments Incorporated

Copyright © 2016, Texas Instruments Incorporated

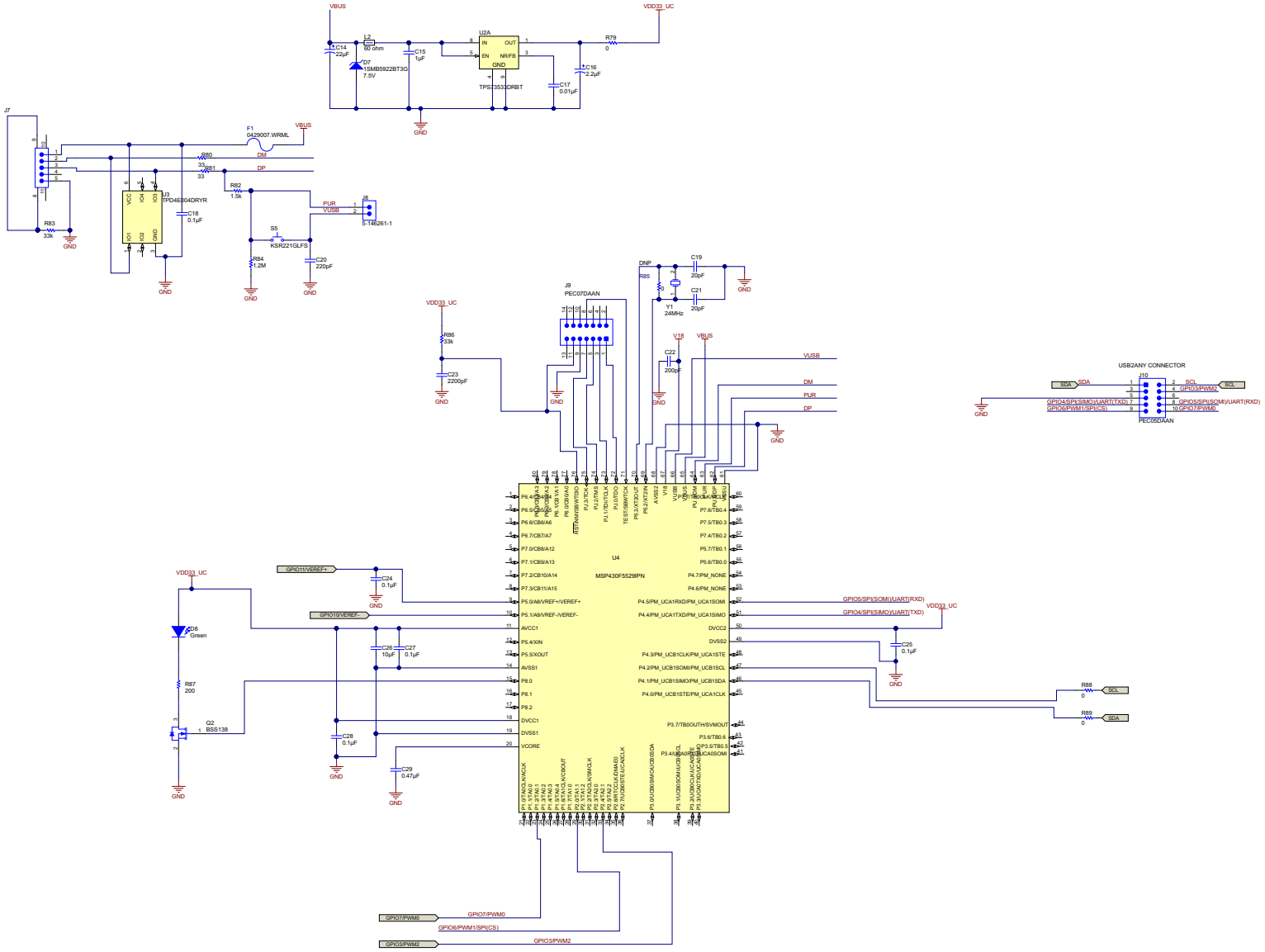

Copyright © 2016, Texas Instruments Incorporated

Copyright © 2016, Texas Instruments Incorporated

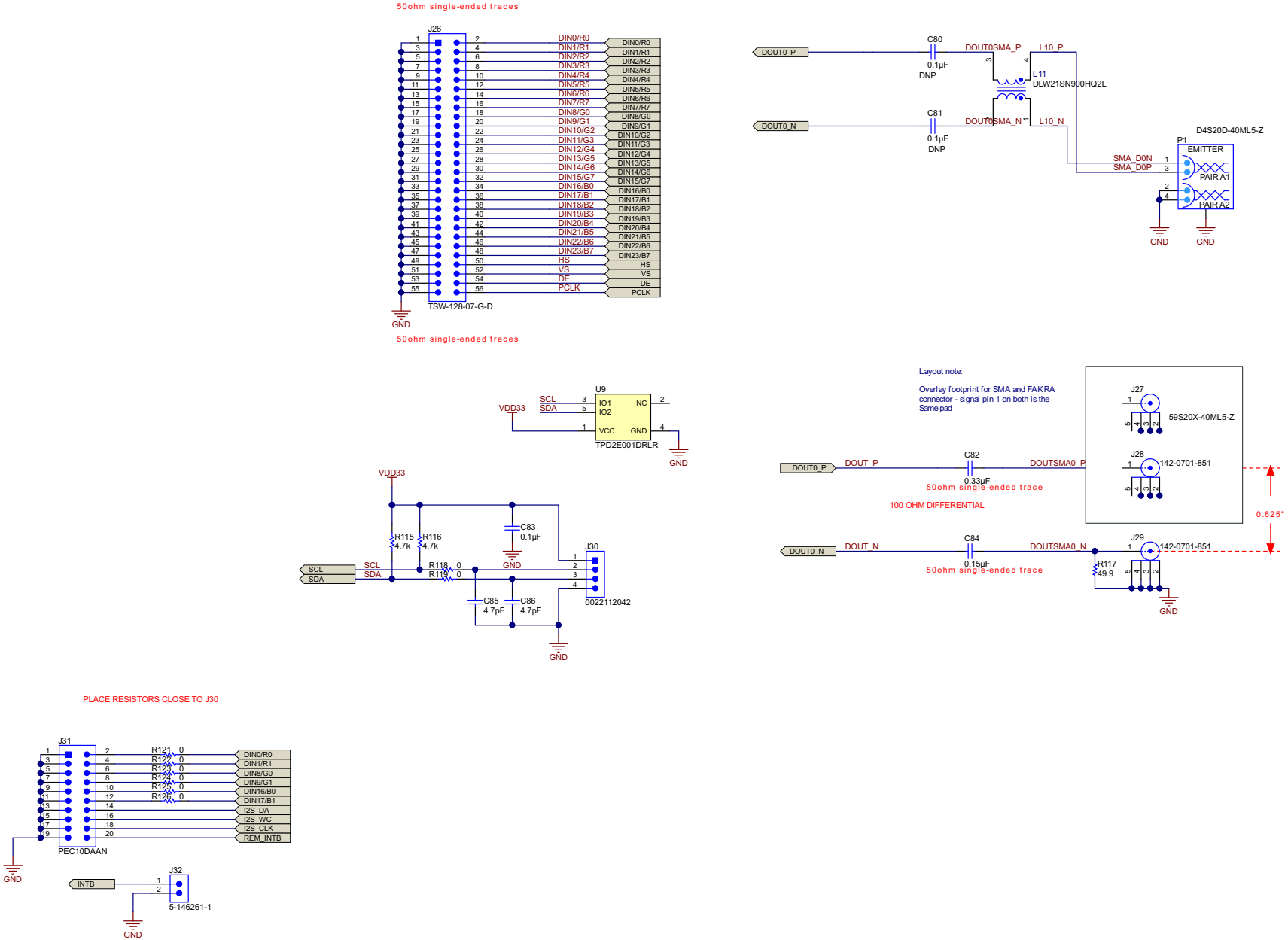

Copyright © 2016, Texas Instruments Incorporated

Copyright © 2016, Texas Instruments Incorporated

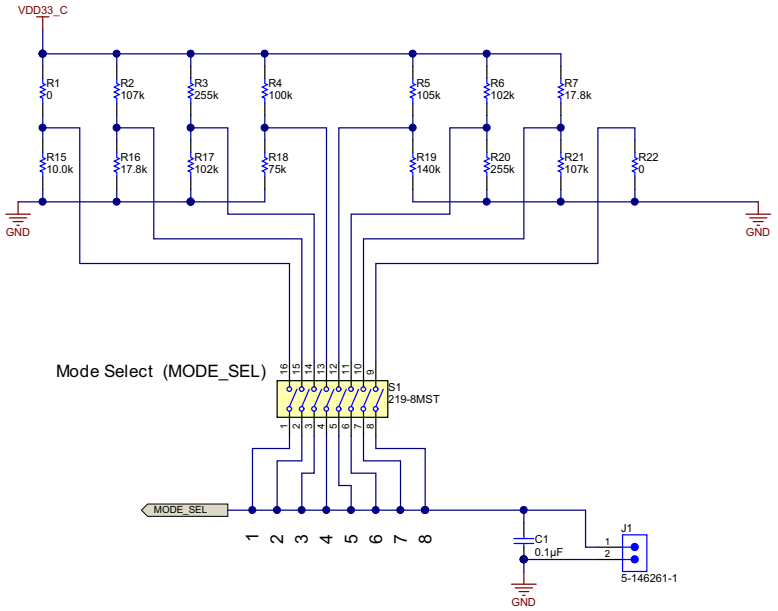

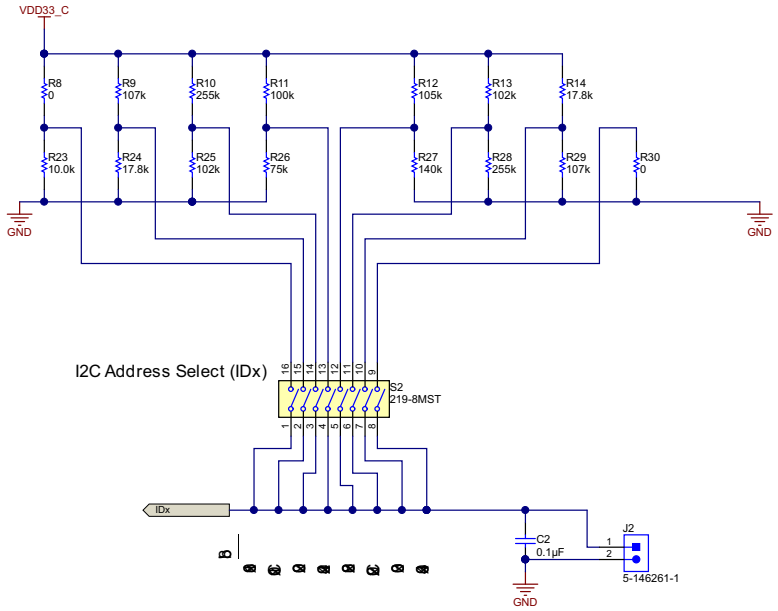

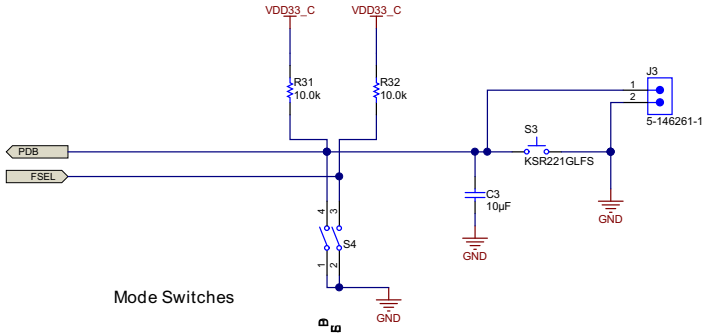

Copyright © 2016, Texas Instruments Incorporated

Copyright © 2016, Texas Instruments Incorporated

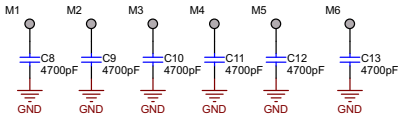

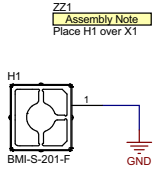

Label Table	
Variant	Label Text
001	DS90UB921-Q1EVM

PCB
LOGO

PCB Number: PRJ_Number
PCB Rev: PCB_Rev

LBL?
PCB Label
Size: 1.25" x 0.25"

PCB
LOGO
Texas Instruments

Board Silkscreen Label: "Not for EMI Testing"

PCB
LOGO
FCC disclaimer

ZZ2
Label Assembly Note
This Assembly Note is for PCB labels only

ZZ3
Label Assembly Note
These assemblies are ESD sensitive, ESD precautions shall be observed

ZZ4
Label Assembly Note
These assemblies must be clean and free from flux and all contaminants. Use of no clean flux is not acceptable

ZZ5
Label Assembly Note
These assemblies must comply with workmanship standards IPC-A-610 Class 2., unless otherwise specified

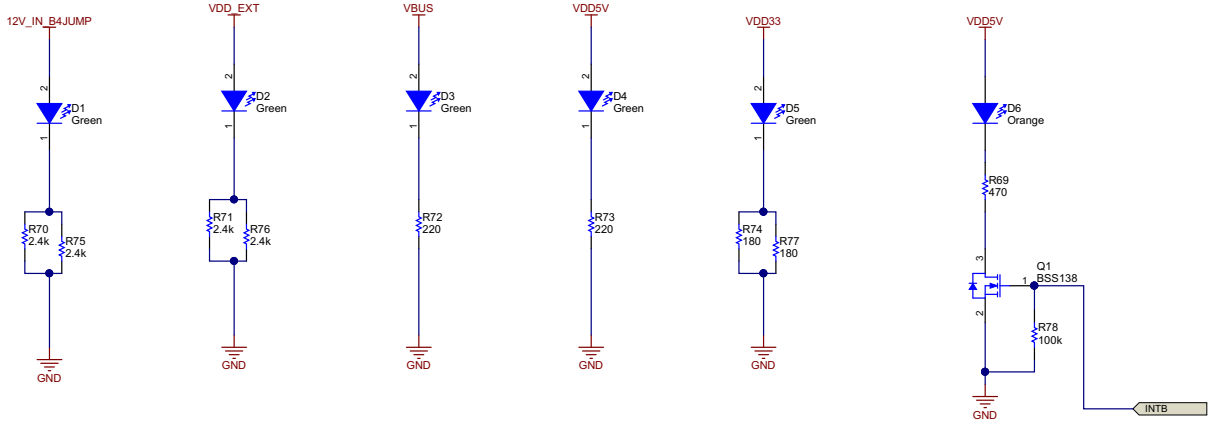

Copyright © 2016, Texas Instruments Incorporated

Copyright © 2016, Texas Instruments Incorporated

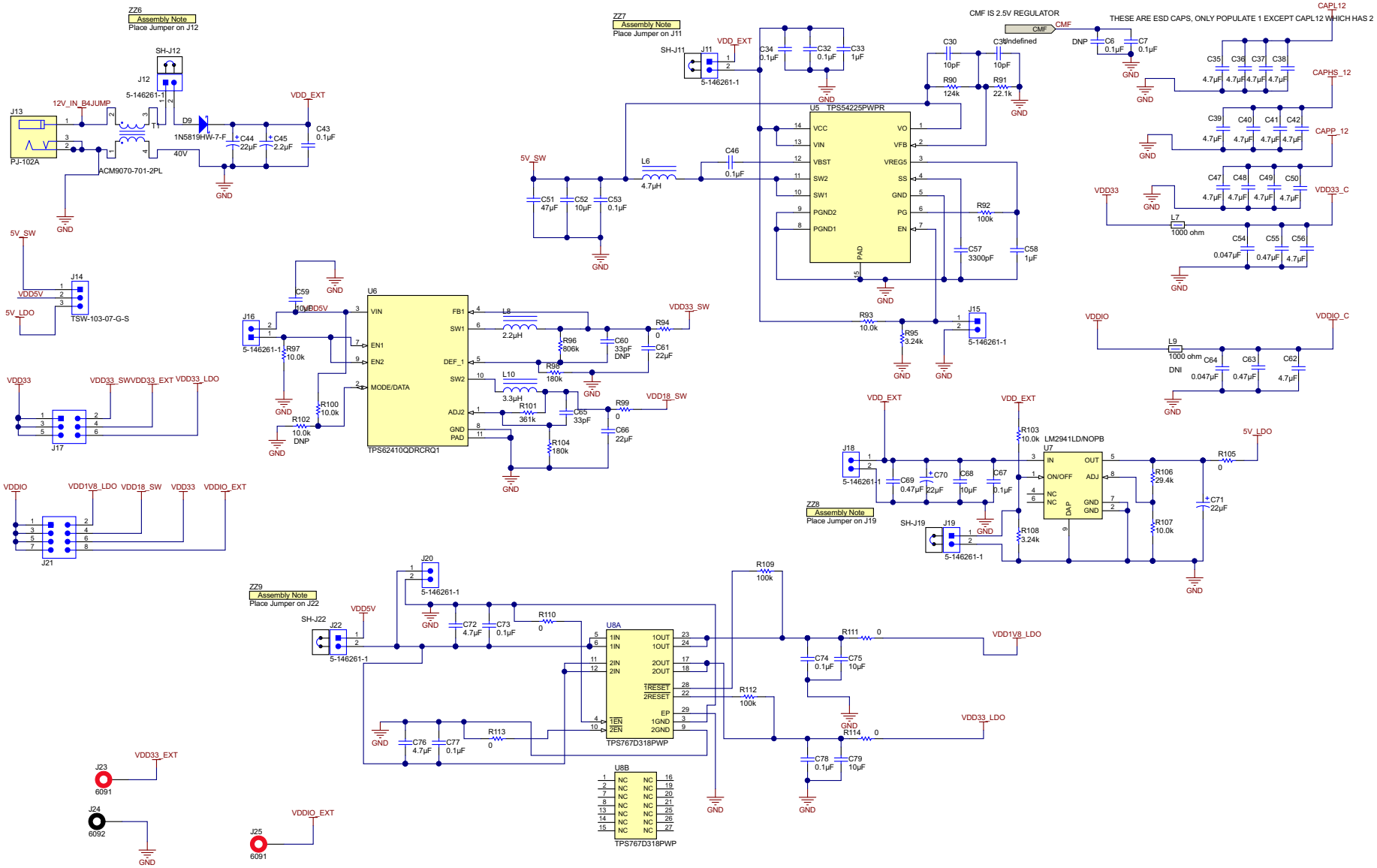

Copyright © 2016, Texas Instruments Incorporated

Copyright © 2016, Texas Instruments Incorporated

Board Layout

Board Layers

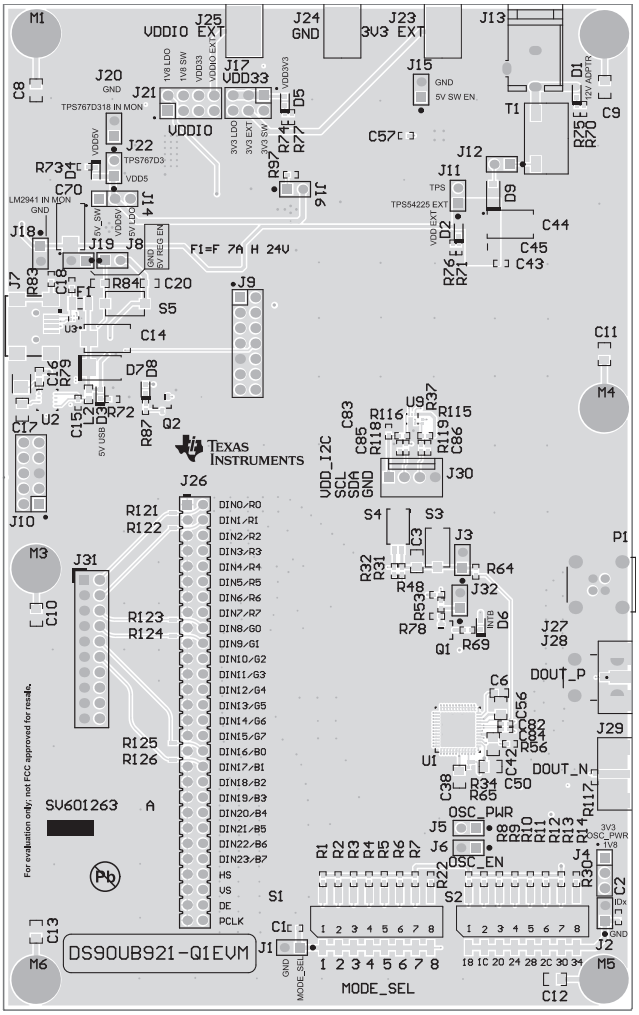

Figure B-1. Top Layer

Copyright © 2016, Texas Instruments Incorporated

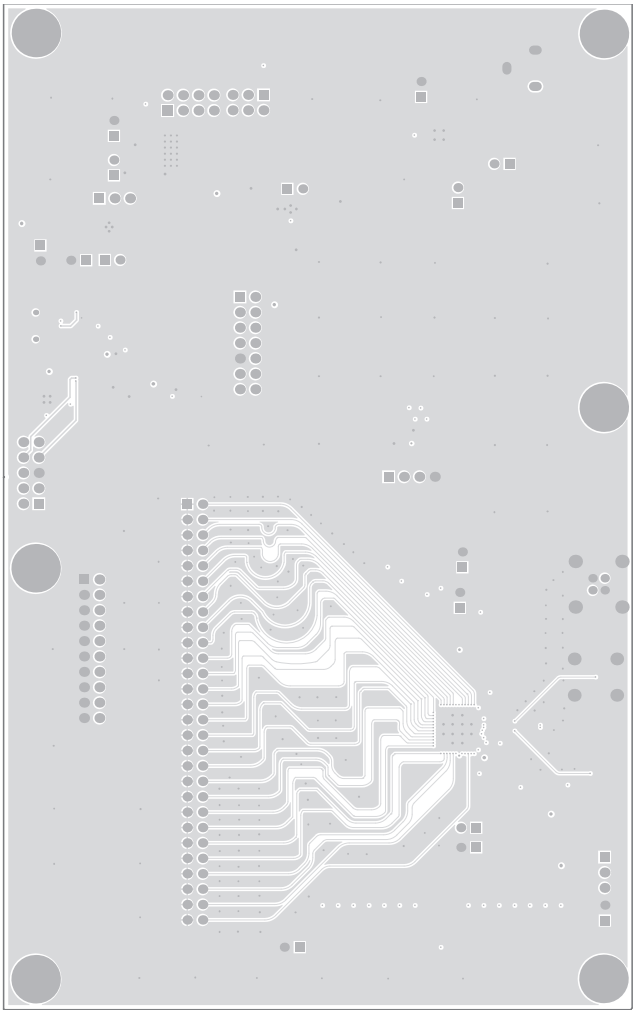

Figure B-2. Inner GND Layer

Copyright © 2016, Texas Instruments Incorporated

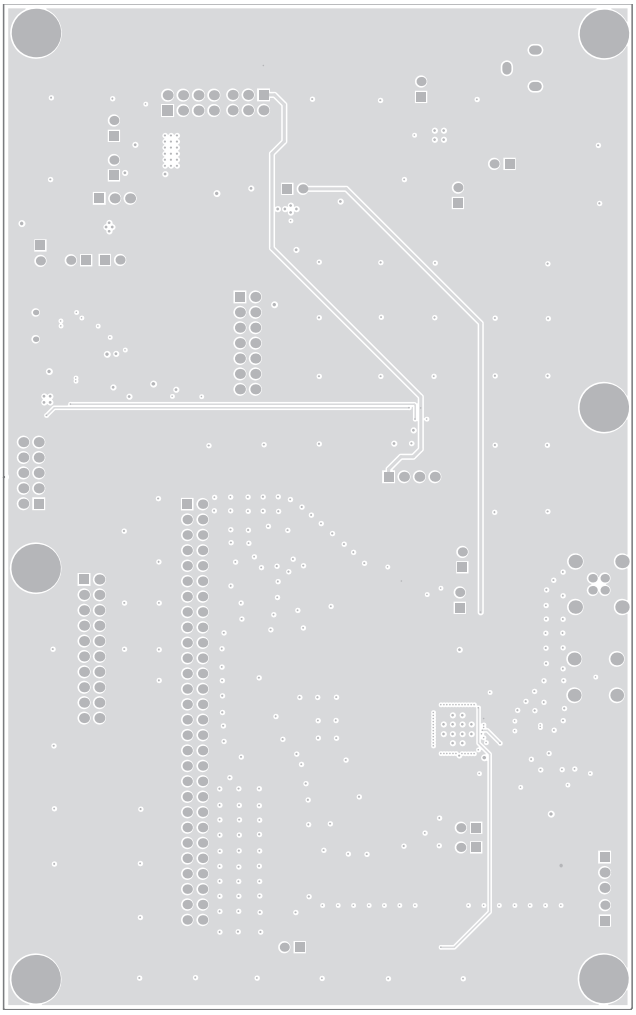

Figure B-3. Inner Power Supply Layer

Copyright © 2016, Texas Instruments Incorporated

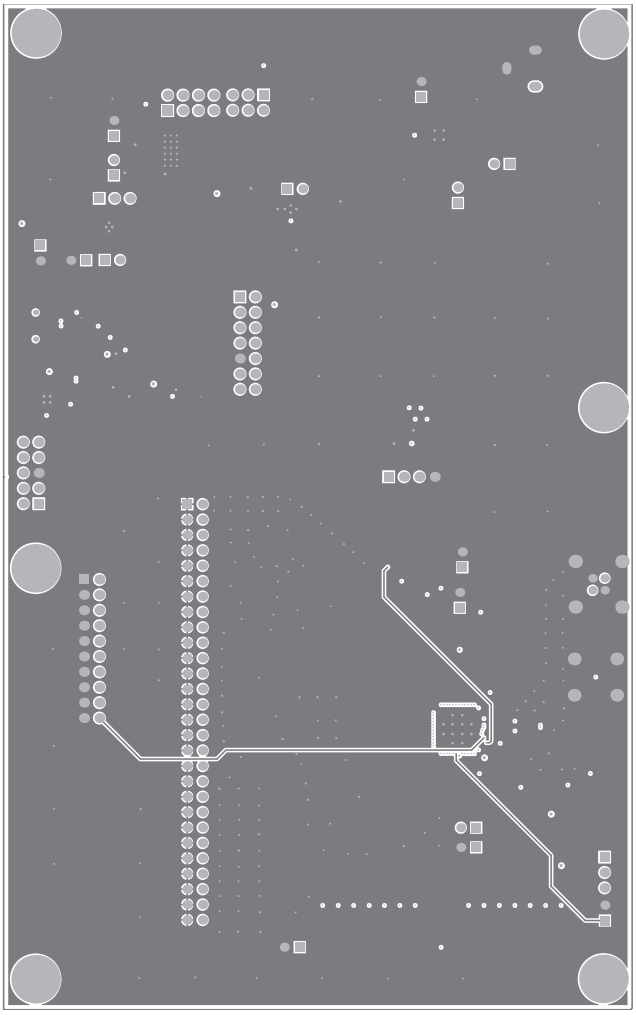

Figure B-4. Inner GND Layer

Copyright © 2016, Texas Instruments Incorporated

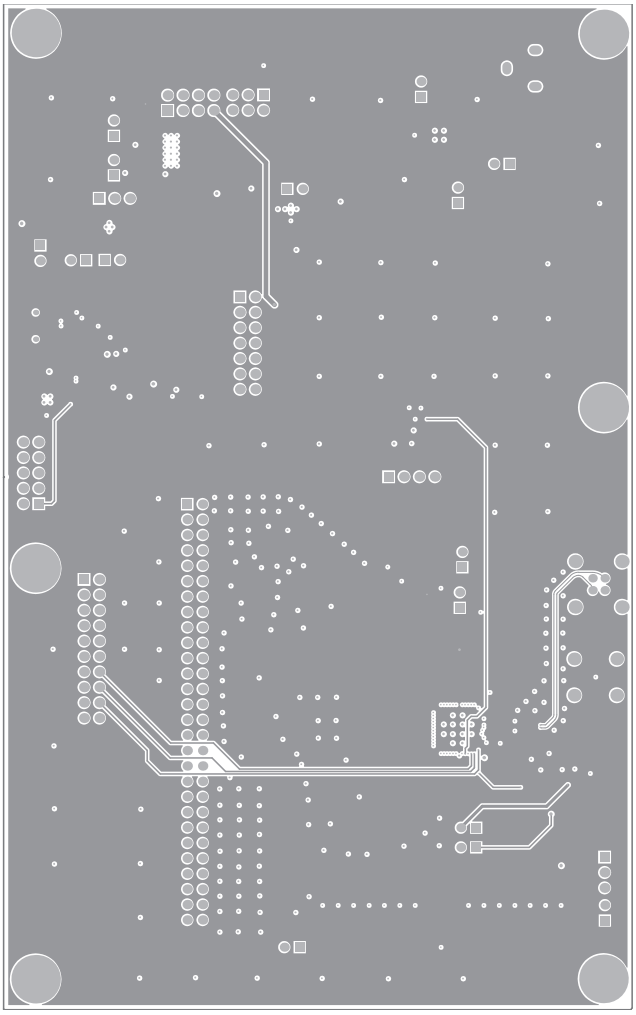

Figure B-5. Inner Power Supply Layer

Copyright © 2016, Texas Instruments Incorporated

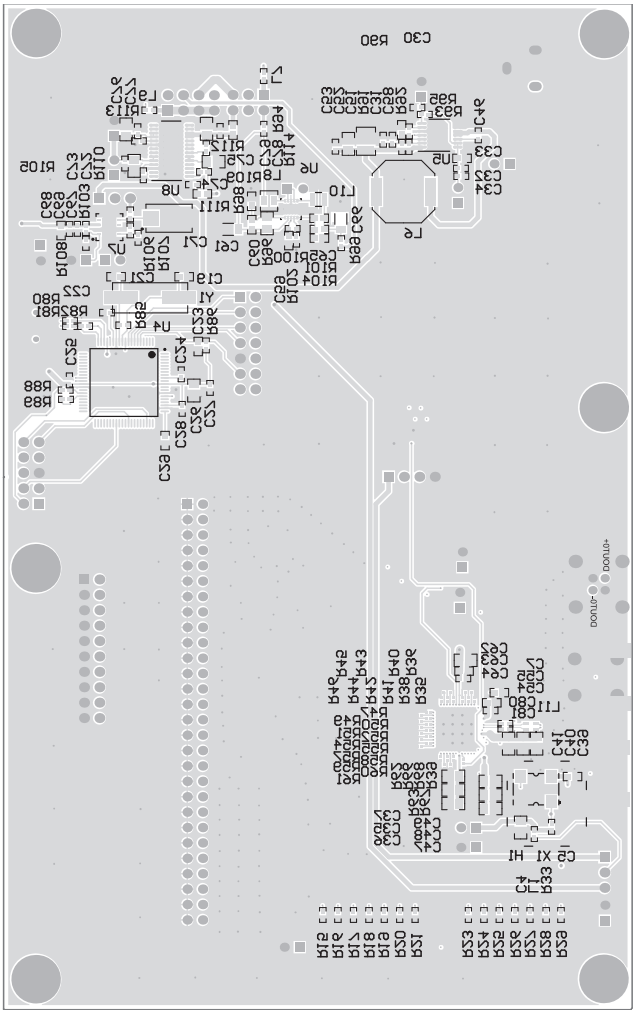

Figure B-6. Bottom Layer

Copyright © 2016, Texas Instruments Incorporated

STANDARD TERMS AND CONDITIONS FOR EVALUATION MODULES

1. *Delivery:* TI delivers TI evaluation boards, kits, or modules, including any accompanying demonstration software, components, or documentation (collectively, an “EVM” or “EVMs”) to the User (“User”) in accordance with the terms and conditions set forth herein. Acceptance of the EVM is expressly subject to the following terms and conditions.

   1.1 EVMs are intended solely for product or software developers for use in a research and development setting to facilitate feasibility evaluation, experimentation, or scientific analysis of TI semiconductors products. EVMs have no direct function and are not finished products. EVMs shall not be directly or indirectly assembled as a part or subassembly in any finished product. For clarification, any software or software tools provided with the EVM (“Software”) shall not be subject to the terms and conditions set forth herein but rather shall be subject to the applicable terms and conditions that accompany such Software

   1.2 EVMs are not intended for consumer or household use. EVMs may not be sold, sublicensed, leased, rented, loaned, assigned, or otherwise distributed for commercial purposes by Users, in whole or in part, or used in any finished product or production system.

2 *Limited Warranty and Related Remedies/Disclaimers*:

   2.1 These terms and conditions do not apply to Software. The warranty, if any, for Software is covered in the applicable Software License Agreement.

   2.2 TI warrants that the TI EVM will conform to TI's published specifications for ninety (90) days after the date TI delivers such EVM to User. Notwithstanding the foregoing, TI shall not be liable for any defects that are caused by neglect, misuse or mistreatment by an entity other than TI, including improper installation or testing, or for any EVMs that have been altered or modified in any way by an entity other than TI. Moreover, TI shall not be liable for any defects that result from User's design, specifications or instructions for such EVMs. Testing and other quality control techniques are used to the extent TI deems necessary or as mandated by government requirements. TI does not test all parameters of each EVM.

   2.3 If any EVM fails to conform to the warranty set forth above, TI's sole liability shall be at its option to repair or replace such EVM, or credit User's account for such EVM. TI's liability under this warranty shall be limited to EVMs that are returned during the warranty period to the address designated by TI and that are determined by TI not to conform to such warranty. If TI elects to repair or replace such EVM, TI shall have a reasonable time to repair such EVM or provide replacements. Repaired EVMs shall be warranted for the remainder of the original warranty period. Replaced EVMs shall be warranted for a new full ninety (90) day warranty period.

3 *Regulatory Notices:*

   3.1 *United States*

      3.1.1 *Notice applicable to EVMs not FCC-Approved:*

      This kit is designed to allow product developers to evaluate electronic components, circuitry, or software associated with the kit to determine whether to incorporate such items in a finished product and software developers to write software applications for use with the end product. This kit is not a finished product and when assembled may not be resold or otherwise marketed unless all required FCC equipment authorizations are first obtained. Operation is subject to the condition that this product not cause harmful interference to licensed radio stations and that this product accept harmful interference. Unless the assembled kit is designed to operate under part 15, part 18 or part 95 of this chapter, the operator of the kit must operate under the authority of an FCC license holder or must secure an experimental authorization under part 5 of this chapter.

      3.1.2 *For EVMs annotated as FCC – FEDERAL COMMUNICATIONS COMMISSION Part 15 Compliant:*

      CAUTION

      This device complies with part 15 of the FCC Rules. Operation is subject to the following two conditions: (1) This device may not cause harmful interference, and (2) this device must accept any interference received, including interference that may cause undesired operation.

      Changes or modifications not expressly approved by the party responsible for compliance could void the user's authority to operate the equipment.

      FCC Interference Statement for Class A EVM devices

      NOTE: This equipment has been tested and found to comply with the limits for a Class A digital device, pursuant to part 15 of the FCC Rules. These limits are designed to provide reasonable protection against harmful interference when the equipment is operated in a commercial environment. This equipment generates, uses, and can radiate radio frequency energy and, if not installed and used in accordance with the instruction manual, may cause harmful interference to radio communications. Operation of this equipment in a residential area is likely to cause harmful interference in which case the user will be required to correct the interference at his own expense.

FCC Interference Statement for Class B EVM devices

NOTE: This equipment has been tested and found to comply with the limits for a Class B digital device, pursuant to part 15 of the FCC Rules. These limits are designed to provide reasonable protection against harmful interference in a residential installation. This equipment generates, uses and can radiate radio frequency energy and, if not installed and used in accordance with the instructions, may cause harmful interference to radio communications. However, there is no guarantee that interference will not occur in a particular installation. If this equipment does cause harmful interference to radio or television reception, which can be determined by turning the equipment off and on, the user is encouraged to try to correct the interference by one or more of the following measures:

- *Reorient or relocate the receiving antenna.*
- *Increase the separation between the equipment and receiver.*
- *Connect the equipment into an outlet on a circuit different from that to which the receiver is connected.*
- *Consult the dealer or an experienced radio/TV technician for help.*

3.2 *Canada*

3.2.1 *For EVMs issued with an Industry Canada Certificate of Conformance to RSS-210*

Concerning EVMs Including Radio Transmitters:

This device complies with Industry Canada license-exempt RSS standard(s). Operation is subject to the following two conditions: (1) this device may not cause interference, and (2) this device must accept any interference, including interference that may cause undesired operation of the device.

Concernant les EVMs avec appareils radio:

Le présent appareil est conforme aux CNR d'Industrie Canada applicables aux appareils radio exempts de licence. L'exploitation est autorisée aux deux conditions suivantes: (1) l'appareil ne doit pas produire de brouillage, et (2) l'utilisateur de l'appareil doit accepter tout brouillage radioélectrique subi, même si le brouillage est susceptible d'en compromettre le fonctionnement.

Concerning EVMs Including Detachable Antennas:

Under Industry Canada regulations, this radio transmitter may only operate using an antenna of a type and maximum (or lesser) gain approved for the transmitter by Industry Canada. To reduce potential radio interference to other users, the antenna type and its gain should be so chosen that the equivalent isotropically radiated power (e.i.r.p.) is not more than that necessary for successful communication. This radio transmitter has been approved by Industry Canada to operate with the antenna types listed in the user guide with the maximum permissible gain and required antenna impedance for each antenna type indicated. Antenna types not included in this list, having a gain greater than the maximum gain indicated for that type, are strictly prohibited for use with this device.

Concernant les EVMs avec antennes détachables

Conformément à la réglementation d'Industrie Canada, le présent émetteur radio peut fonctionner avec une antenne d'un type et d'un gain maximal (ou inférieur) approuvé pour l'émetteur par Industrie Canada. Dans le but de réduire les risques de brouillage radioélectrique à l'intention des autres utilisateurs, il faut choisir le type d'antenne et son gain de sorte que la puissance isotrope rayonnée équivalente (p.i.r.e.) ne dépasse pas l'intensité nécessaire à l'établissement d'une communication satisfaisante. Le présent émetteur radio a été approuvé par Industrie Canada pour fonctionner avec les types d'antenne énumérés dans le manuel d'usage et ayant un gain admissible maximal et l'impédance requise pour chaque type d'antenne. Les types d'antenne non inclus dans cette liste, ou dont le gain est supérieur au gain maximal indiqué, sont strictement interdits pour l'exploitation de l'émetteur

3.3 *Japan*

3.3.1 *Notice for EVMs delivered in Japan:* Please see http://www.tij.co.jp/lsds/ti_ja/general/eStore/notice_01.page 日本国内に輸入される評価用キット、ボードについては、次のところをご覧ください。
http://www.tij.co.jp/lsds/ti_ja/general/eStore/notice_01.page

3.3.2 *Notice for Users of EVMs Considered "Radio Frequency Products" in Japan:* EVMs entering Japan may not be certified by TI as conforming to Technical Regulations of Radio Law of Japan.

If User uses EVMs in Japan, not certified to Technical Regulations of Radio Law of Japan, User is required by Radio Law of Japan to follow the instructions below with respect to EVMs:

1. Use EVMs in a shielded room or any other test facility as defined in the notification #173 issued by Ministry of Internal Affairs and Communications on March 28, 2006, based on Sub-section 1.1 of Article 6 of the Ministry's Rule for Enforcement of Radio Law of Japan,
2. Use EVMs only after User obtains the license of Test Radio Station as provided in Radio Law of Japan with respect to EVMs, or
3. Use of EVMs only after User obtains the Technical Regulations Conformity Certification as provided in Radio Law of Japan with respect to EVMs. Also, do not transfer EVMs, unless User gives the same notice above to the transferee. Please note that if User does not follow the instructions above, User will be subject to penalties of Radio Law of Japan.

【無線電波を送信する製品の開発キットをお使いになる際の注意事項】 開発キットの中には技術基準適合証明を受けていないものがあります。 技術適合証明を受けていないもののご使用に際しては、電波法遵守のため、以下のいずれかの措置を取っていただく必要がありますのでご注意ください。

1. 電波法施行規則第6条第1項第1号に基づく平成18年3月28日総務省告示第173号で定められた電波暗室等の試験設備でご使用いただく。
2. 実験局の免許を取得後ご使用いただく。
3. 技術基準適合証明を取得後ご使用いただく。

なお、本製品は、上記の「ご使用にあたっての注意」を譲渡先、移転先に通知しない限り、譲渡、移転できないものとします。

上記を遵守頂けない場合は、電波法の罰則が適用される可能性があることをご留意ください。 日本テキサス・インスツルメンツ株式会社

東京都新宿区西新宿６丁目２４番１号

西新宿三井ビル

3.3.3 *Notice for EVMs for Power Line Communication:* Please see http://www.tij.co.jp/lsds/ti_ja/general/eStore/notice_02.page

電力線搬送波通信についての開発キットをお使いになる際の注意事項については、次のところをご覧ください。http://www.tij.co.jp/lsds/ti_ja/general/eStore/notice_02.page

4 *EVM Use Restrictions and Warnings:*

4.1 EVMS ARE NOT FOR USE IN FUNCTIONAL SAFETY AND/OR SAFETY CRITICAL EVALUATIONS, INCLUDING BUT NOT LIMITED TO EVALUATIONS OF LIFE SUPPORT APPLICATIONS.

4.2 User must read and apply the user guide and other available documentation provided by TI regarding the EVM prior to handling or using the EVM, including without limitation any warning or restriction notices. The notices contain important safety information related to, for example, temperatures and voltages.

4.3 *Safety-Related Warnings and Restrictions:*

4.3.1 User shall operate the EVM within TI's recommended specifications and environmental considerations stated in the user guide, other available documentation provided by TI, and any other applicable requirements and employ reasonable and customary safeguards. Exceeding the specified performance ratings and specifications (including but not limited to input and output voltage, current, power, and environmental ranges) for the EVM may cause personal injury or death, or property damage. If there are questions concerning performance ratings and specifications, User should contact a TI field representative prior to connecting interface electronics including input power and intended loads. Any loads applied outside of the specified output range may also result in unintended and/or inaccurate operation and/or possible permanent damage to the EVM and/or interface electronics. Please consult the EVM user guide prior to connecting any load to the EVM output. If there is uncertainty as to the load specification, please contact a TI field representative. During normal operation, even with the inputs and outputs kept within the specified allowable ranges, some circuit components may have elevated case temperatures. These components include but are not limited to linear regulators, switching transistors, pass transistors, current sense resistors, and heat sinks, which can be identified using the information in the associated documentation. When working with the EVM, please be aware that the EVM may become very warm.

4.3.2 EVMs are intended solely for use by technically qualified, professional electronics experts who are familiar with the dangers and application risks associated with handling electrical mechanical components, systems, and subsystems. User assumes all responsibility and liability for proper and safe handling and use of the EVM by User or its employees, affiliates, contractors or designees. User assumes all responsibility and liability to ensure that any interfaces (electronic and/or mechanical) between the EVM and any human body are designed with suitable isolation and means to safely limit accessible leakage currents to minimize the risk of electrical shock hazard. User assumes all responsibility and liability for any improper or unsafe handling or use of the EVM by User or its employees, affiliates, contractors or designees.

4.4 User assumes all responsibility and liability to determine whether the EVM is subject to any applicable international, federal, state, or local laws and regulations related to User's handling and use of the EVM and, if applicable, User assumes all responsibility and liability for compliance in all respects with such laws and regulations. User assumes all responsibility and liability for proper disposal and recycling of the EVM consistent with all applicable international, federal, state, and local requirements.

5. *Accuracy of Information:* To the extent TI provides information on the availability and function of EVMs, TI attempts to be as accurate as possible. However, TI does not warrant the accuracy of EVM descriptions, EVM availability or other information on its websites as accurate, complete, reliable, current, or error-free.

6. *Disclaimers:*

   6.1 EXCEPT AS SET FORTH ABOVE, EVMS AND ANY WRITTEN DESIGN MATERIALS PROVIDED WITH THE EVM (AND THE DESIGN OF THE EVM ITSELF) ARE PROVIDED "AS IS" AND "WITH ALL FAULTS." TI DISCLAIMS ALL OTHER WARRANTIES, EXPRESS OR IMPLIED, REGARDING SUCH ITEMS, INCLUDING BUT NOT LIMITED TO ANY IMPLIED WARRANTIES OF MERCHANTABILITY OR FITNESS FOR A PARTICULAR PURPOSE OR NON-INFRINGEMENT OF ANY THIRD PARTY PATENTS, COPYRIGHTS, TRADE SECRETS OR OTHER INTELLECTUAL PROPERTY RIGHTS.

   6.2 EXCEPT FOR THE LIMITED RIGHT TO USE THE EVM SET FORTH HEREIN, NOTHING IN THESE TERMS AND CONDITIONS SHALL BE CONSTRUED AS GRANTING OR CONFERRING ANY RIGHTS BY LICENSE, PATENT, OR ANY OTHER INDUSTRIAL OR INTELLECTUAL PROPERTY RIGHT OF TI, ITS SUPPLIERS/LICENSORS OR ANY OTHER THIRD PARTY, TO USE THE EVM IN ANY FINISHED END-USER OR READY-TO-USE FINAL PRODUCT, OR FOR ANY INVENTION, DISCOVERY OR IMPROVEMENT MADE, CONCEIVED OR ACQUIRED PRIOR TO OR AFTER DELIVERY OF THE EVM.

7. *USER'S INDEMNITY OBLIGATIONS AND REPRESENTATIONS.* USER WILL DEFEND, INDEMNIFY AND HOLD TI, ITS LICENSORS AND THEIR REPRESENTATIVES HARMLESS FROM AND AGAINST ANY AND ALL CLAIMS, DAMAGES, LOSSES, EXPENSES, COSTS AND LIABILITIES (COLLECTIVELY, "CLAIMS") ARISING OUT OF OR IN CONNECTION WITH ANY HANDLING OR USE OF THE EVM THAT IS NOT IN ACCORDANCE WITH THESE TERMS AND CONDITIONS. THIS OBLIGATION SHALL APPLY WHETHER CLAIMS ARISE UNDER STATUTE, REGULATION, OR THE LAW OF TORT, CONTRACT OR ANY OTHER LEGAL THEORY, AND EVEN IF THE EVM FAILS TO PERFORM AS DESCRIBED OR EXPECTED.

8. *Limitations on Damages and Liability:*

   8.1 *General Limitations*. IN NO EVENT SHALL TI BE LIABLE FOR ANY SPECIAL, COLLATERAL, INDIRECT, PUNITIVE, INCIDENTAL, CONSEQUENTIAL, OR EXEMPLARY DAMAGES IN CONNECTION WITH OR ARISING OUT OF THESE TERMS ANDCONDITIONS OR THE USE OF THE EVMS PROVIDED HEREUNDER, REGARDLESS OF WHETHER TI HAS BEEN ADVISED OF THE POSSIBILITY OF SUCH DAMAGES. EXCLUDED DAMAGES INCLUDE, BUT ARE NOT LIMITED TO, COST OF REMOVAL OR REINSTALLATION, ANCILLARY COSTS TO THE PROCUREMENT OF SUBSTITUTE GOODS OR SERVICES, RETESTING, OUTSIDE COMPUTER TIME, LABOR COSTS, LOSS OF GOODWILL, LOSS OF PROFITS, LOSS OF SAVINGS, LOSS OF USE, LOSS OF DATA, OR BUSINESS INTERRUPTION. NO CLAIM, SUIT OR ACTION SHALL BE BROUGHT AGAINST TI MORE THAN ONE YEAR AFTER THE RELATED CAUSE OF ACTION HAS OCCURRED.

   8.2 *Specific Limitations.* IN NO EVENT SHALL TI'S AGGREGATE LIABILITY FROM ANY WARRANTY OR OTHER OBLIGATION ARISING OUT OF OR IN CONNECTION WITH THESE TERMS AND CONDITIONS, OR ANY USE OF ANY TI EVM PROVIDED HEREUNDER, EXCEED THE TOTAL AMOUNT PAID TO TI FOR THE PARTICULAR UNITS SOLD UNDER THESE TERMS AND CONDITIONS WITH RESPECT TO WHICH LOSSES OR DAMAGES ARE CLAIMED. THE EXISTENCE OF MORE THAN ONE CLAIM AGAINST THE PARTICULAR UNITS SOLD TO USER UNDER THESE TERMS AND CONDITIONS SHALL NOT ENLARGE OR EXTEND THIS LIMIT.

9. *Return Policy.* Except as otherwise provided, TI does not offer any refunds, returns, or exchanges. Furthermore, no return of EVM(s) will be accepted if the package has been opened and no return of the EVM(s) will be accepted if they are damaged or otherwise not in a resalable condition. If User feels it has been incorrectly charged for the EVM(s) it ordered or that delivery violates the applicable order, User should contact TI. All refunds will be made in full within thirty (30) working days from the return of the components(s), excluding any postage or packaging costs.

10. *Governing Law:* These terms and conditions shall be governed by and interpreted in accordance with the laws of the State of Texas, without reference to conflict-of-laws principles. User agrees that non-exclusive jurisdiction for any dispute arising out of or relating to these terms and conditions lies within courts located in the State of Texas and consents to venue in Dallas County, Texas. Notwithstanding the foregoing, any judgment may be enforced in any United States or foreign court, and TI may seek injunctive relief in any United States or foreign court.

Mailing Address: Texas Instruments, Post Office Box 655303, Dallas, Texas 75265
Copyright © 2015, Texas Instruments Incorporated

IMPORTANT NOTICE

Texas Instruments Incorporated and its subsidiaries (TI) reserve the right to make corrections, enhancements, improvements and other changes to its semiconductor products and services per JESD46, latest issue, and to discontinue any product or service per JESD48, latest issue. Buyers should obtain the latest relevant information before placing orders and should verify that such information is current and complete. All semiconductor products (also referred to herein as “components”) are sold subject to TI’s terms and conditions of sale supplied at the time of order acknowledgment.

TI warrants performance of its components to the specifications applicable at the time of sale, in accordance with the warranty in TI’s terms and conditions of sale of semiconductor products. Testing and other quality control techniques are used to the extent TI deems necessary to support this warranty. Except where mandated by applicable law, testing of all parameters of each component is not necessarily performed.

TI assumes no liability for applications assistance or the design of Buyers’ products. Buyers are responsible for their products and applications using TI components. To minimize the risks associated with Buyers’ products and applications, Buyers should provide adequate design and operating safeguards.

TI does not warrant or represent that any license, either express or implied, is granted under any patent right, copyright, mask work right, or other intellectual property right relating to any combination, machine, or process in which TI components or services are used. Information published by TI regarding third-party products or services does not constitute a license to use such products or services or a warranty or endorsement thereof. Use of such information may require a license from a third party under the patents or other intellectual property of the third party, or a license from TI under the patents or other intellectual property of TI.

Reproduction of significant portions of TI information in TI data books or data sheets is permissible only if reproduction is without alteration and is accompanied by all associated warranties, conditions, limitations, and notices. TI is not responsible or liable for such altered documentation. Information of third parties may be subject to additional restrictions.

Resale of TI components or services with statements different from or beyond the parameters stated by TI for that component or service voids all express and any implied warranties for the associated TI component or service and is an unfair and deceptive business practice. TI is not responsible or liable for any such statements.

Buyer acknowledges and agrees that it is solely responsible for compliance with all legal, regulatory and safety-related requirements concerning its products, and any use of TI components in its applications, notwithstanding any applications-related information or support that may be provided by TI. Buyer represents and agrees that it has all the necessary expertise to create and implement safeguards which anticipate dangerous consequences of failures, monitor failures and their consequences, lessen the likelihood of failures that might cause harm and take appropriate remedial actions. Buyer will fully indemnify TI and its representatives against any damages arising out of the use of any TI components in safety-critical applications.

In some cases, TI components may be promoted specifically to facilitate safety-related applications. With such components, TI’s goal is to help enable customers to design and create their own end-product solutions that meet applicable functional safety standards and requirements. Nonetheless, such components are subject to these terms.

No TI components are authorized for use in FDA Class III (or similar life-critical medical equipment) unless authorized officers of the parties have executed a special agreement specifically governing such use.

Only those TI components which TI has specifically designated as military grade or “enhanced plastic” are designed and intended for use in military/aerospace applications or environments. Buyer acknowledges and agrees that any military or aerospace use of TI components which have ***not*** been so designated is solely at the Buyer's risk, and that Buyer is solely responsible for compliance with all legal and regulatory requirements in connection with such use.

TI has specifically designated certain components as meeting ISO/TS16949 requirements, mainly for automotive use. In any case of use of non-designated products, TI will not be responsible for any failure to meet ISO/TS16949.

Products		**Applications**	
Audio	www.ti.com/audio	Automotive and Transportation	www.ti.com/automotive
Amplifiers	amplifier.ti.com	Communications and Telecom	www.ti.com/communications
Data Converters	dataconverter.ti.com	Computers and Peripherals	www.ti.com/computers
DLP® Products	www.dlp.com	Consumer Electronics	www.ti.com/consumer-apps
DSP	dsp.ti.com	Energy and Lighting	www.ti.com/energy
Clocks and Timers	www.ti.com/clocks	Industrial	www.ti.com/industrial
Interface	interface.ti.com	Medical	www.ti.com/medical
Logic	logic.ti.com	Security	www.ti.com/security
Power Mgmt	power.ti.com	Space, Avionics and Defense	www.ti.com/space-avionics-defense
Microcontrollers	microcontroller.ti.com	Video and Imaging	www.ti.com/video
RFID	www.ti-rfid.com		
OMAP Applications Processors	www.ti.com/omap	**TI E2E Community**	e2e.ti.com
Wireless Connectivity	www.ti.com/wirelessconnectivity		

Mailing Address: Texas Instruments, Post Office Box 655303, Dallas, Texas 75265
Copyright © 2016, Texas Instruments Incorporated