DS90CP02 1.5 Gbps 2x2 LVDS Crosspoint Switch

Check for Samples: DS90CP02

FEATURES

- **1.5 Gbps per Channel**
- **Low Power: 70 mA in Dual Repeater Mode @1.5 Gbps**
- **Low Output Jitter**
- **Non-Blocking Architecture Allows 1:2 Splitter, 2:1 Mux, Crossover, and Dual Buffer Configurations**
- **Flow-Through Pinout**
- **LVDS/BLVDS/CML/LVPECL Inputs, LVDS Outputs**
- **Single 3.3V Supply**
- **Separate Control of Inputs and Outputs Allows for Power Savings**
- **Industrial -40 to +85°C Temperature Range**
- **28-lead UQFN-28 Space Saving Package**

DESCRIPTION

The DS90CP02 is a 1.5 Gbps 2 x 2 LVDS crosspoint switch optimized for high-speed signal routing and switching over lossy FR-4 printed circuit board backplanes and balanced cables. Fully differential signal paths ensure exceptional signal integrity and noise immunity. The non-blocking architecture allows connections of any input to any output or outputs.

Wide input common mode range allows the switch to accept signals with LVDS, CML and LVPECL levels; the output levels are LVDS. A very small package footprint requires a minimal space on the board while the flow-through pinout allows easy board layout. The 3.3V supply, CMOS process, and LVDS I/O ensure high performance at low power over the entire industrial -40 to +85°C temperature range.

Block Diagram

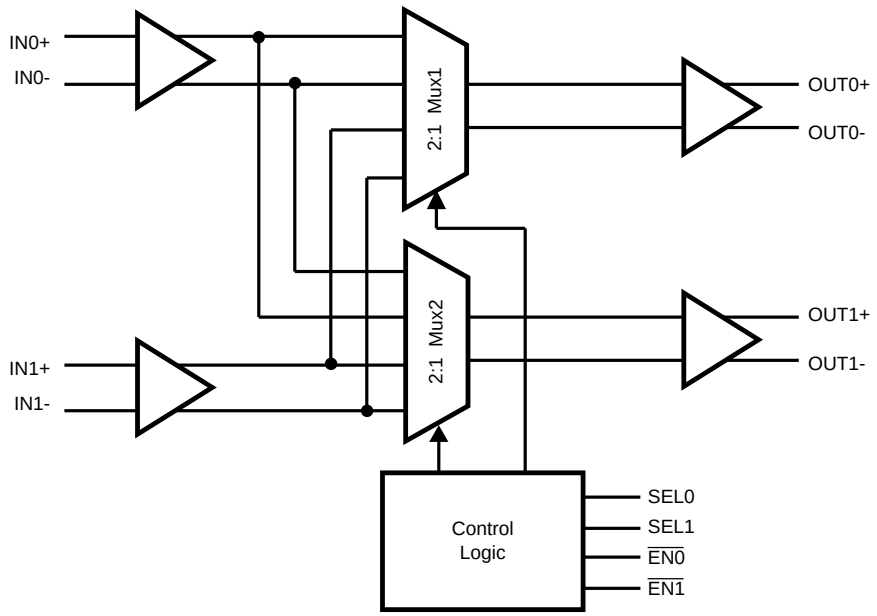

Figure 1. DS90CP02 Block Diagram

Please be aware that an important notice concerning availability, standard warranty, and use in critical applications of Texas Instruments semiconductor products and disclaimers thereto appears at the end of this data sheet.

All trademarks are the property of their respective owners.

PRODUCTION DATA information is current as of publication date. Products conform to specifications per the terms of the Texas Instruments standard warranty. Production processing does not necessarily include testing of all parameters.

Copyright © 2008–2013, Texas Instruments Incorporated

Table 1. PIN DESCRIPTIONS

Pin Name	Pin Number	I/O, Type	Description
DIFFERENTIAL INPUTS COMMON TO ALL MUXES			
IN0+ IN0−	9 10	I, LVDS	Inverting and non-inverting differential inputs. LVDS, Bus LVDS, CML, or LVPECL compatible.
IN1+ IN1−	12 13	I, LVDS	Inverting and non-inverting differential inputs. LVDS, Bus LVDS, CML, or LVPECL compatible.
SWITCHED DIFFERENTIAL OUTPUTS			
OUT0+ OUT0−	27 26	O, LVDS	Inverting and non-inverting differential outputs. OUT0± can be connected to any one pair IN0±, or IN1±. LVDS compatible .
OUT1+ OUT1−	24 23	O, LVDS	Inverting and non-inverting differential outputs. OUT1± can be connected to any one pair IN0±, or IN1±. LVDS compatible .
DIGITAL CONTROL INTERFACE			
SEL0, SEL1	6 5	I, LVTTL	Select Control Inputs
$\overline{EN0}$, $\overline{EN1}$	7 15	I, LVTTL	Output Enable Inputs
N/C	8, 20, 28		Not Connected
POWER			
V_{DD}	11, 14, 16, 18, 19, 22, 25	I, Power	V_{DD} = 3.3V ±0.3V. At least 4 low ESR 0.01 µF bypass capacitors should be connected from V_{DD} to GND plane.
GND	DAP, 1, 2, 3, 4, 17, 21	I, Power	Ground reference to LVDS and CMOS circuitry. For the UQFN package, the DAP is used as the primary GND connection to the device. The DAP is the exposed metal contact at the bottom of the UQFN-28 package. It should be connected to the ground plane with at least 4 vias for optimal AC and thermal performance.

Connection Diagram

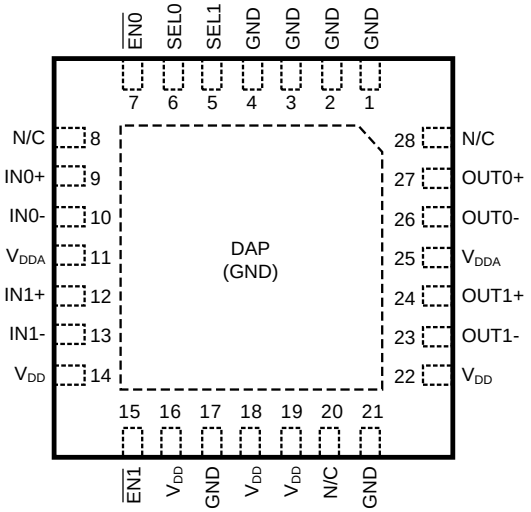

Figure 2. UQFN Top View
DAP = GND
See Package Number NJD0028A

Copyright © 2008–2013, Texas Instruments Incorporated

Configuration Select Truth Table

SEL0	SEL1	$\overline{EN0}$	$\overline{EN1}$	OUT0	OUT1	Mode
0	0	0	0	IN0	IN0	1:2 Splitter (IN1 powered down)
0	1	0	0	IN0	IN1	Dual Channel Repeater
1	0	0	0	IN1	IN0	Dual Channel Switch
1	1	0	0	IN1	IN1	1:2 Splitter (IN0 powered down)
0	1	0	1	IN0	PD	Single Channel Repeater (Channel 1 powered down)
1	1	0	1	IN1	PD	Single Channel Switch (IN0 and OUT1 powered down)
0	0	1	0	PD	IN0	Single Channel Switch (IN1 and OUT0 powered down)
0	1	1	0	PD	IN1	Single Channel Repeater (Channel 0 powered down)
X	X	1	1	PD	PD	Both Channels in Power Down Mode
0	0	0	1			Invalid State*
1	0	0	1			Invalid State*
1	0	1	0			Invalid State*
1	1	1	0			Invalid State*

Copyright © 2008–2013, Texas Instruments Incorporated

APPLICATION INFORMATION

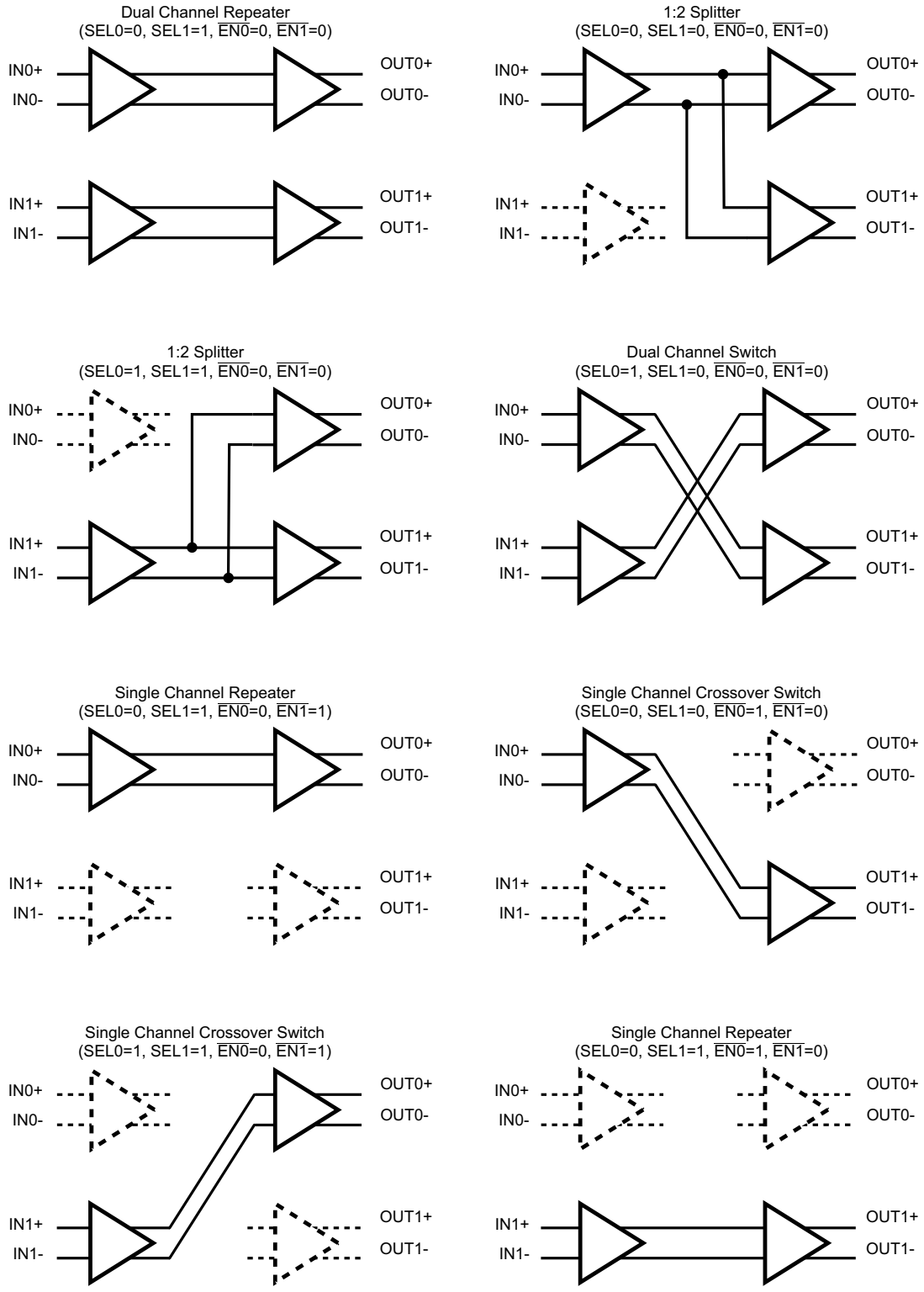

Figure 3. DS90CP02 Configuration Select Decode

Copyright © 2008–2013, Texas Instruments Incorporated

These devices have limited built-in ESD protection. The leads should be shorted together or the device placed in conductive foam during storage or handling to prevent electrostatic damage to the MOS gates.

Absolute Maximum Ratings (1)(2)

Supply Voltage (V_{DD})	−0.3V to +4.0V
CMOS Input Voltage	−0.3V to (V_{DD} +0.3V)
LVDS Receiver Input Voltage	−0.3V to +3.6V
LVDS Driver Output Voltage	−0.3V to +3.6V
LVDS Output Short Circuit Current	40mA
Junction Temperature	+150°C
Storage Temperature	−65°C to +150°C
Lead Temperature (Soldering, 4sec.)	+260°C
Maximum Package Power Dissipation at 25°C	
UQFN-28	4.31 W
Derating above 25°C	
UQFN-28	34.5 mW/°C
Thermal Resistance, θ_{JA}	
UQFN-28	29°C/W
ESD Rating	
HBM, 1.5 kΩ, 100 pF	6.5 kV
EIAJ, 0Ω, 200 pF	>250V

(1) "Absolute Maximum Ratings" are the ratings beyond which the safety of the device cannot be guaranteed. They are not meant to imply that the device should be operated at these limits.
(2) If Military/Aerospace specified devices are required, please contact the Texas Instruments Sales Office/Distributors for availability and specifications.

Recommended Operating Conditions

	Min	Typ	Max	Unit
Supply Voltage (V_{DD}– GND)	3.0	3.3	3.6	V
Receiver Input Voltage	0		3.6	V
Operating Free Air Temperature	−40	25	85	°C
Junction Temperature			150	°C

Copyright © 2008–2013, Texas Instruments Incorporated

Electrical Characteristics

Over recommended operating supply and temperature ranges unless other specified.

Symbol	Parameter	Conditions	Min	Typ (1)	Max	Units
LVTTL DC SPECIFICATIONS (SEL0, SEL1, $\overline{EN1}$, $\overline{EN2}$)						
V_{IH}	High Level Input Voltage		2.0		V_{DD}	V
V_{IL}	Low Level Input Voltage		GND		0.8	V
I_{IH}	High Level Input Current	$V_{IN} = V_{DD} = V_{DDMAX}$	−10		+10	µA
I_{IL}	Low Level Input Current	$V_{IN} = V_{SS}$, $V_{DD} = V_{DDMAX}$	−10		+10	µA
C_{IN1}	Input Capacitance	Any Digital Input Pin to V_{SS}		3.5		pF
V_{CL}	Input Clamp Voltage	I_{CL} = −18 mA	−1.5	−0.8		V
LVDS INPUT DC SPECIFICATIONS (IN0±, IN1±)						
V_{TH}	Differential Input High Threshold (2)	V_{CM} = 0.8V or 1.2V or 3.55V, V_{DD} = 3.6V		0	100	mV
V_{TL}	Differential Input Low Threshold	V_{CM} = 0.8V or 1.2V or 3.55V, V_{DD} = 3.6V	−100	0		mV
V_{ID}	Differential Input Voltage	V_{CM} = 0.8V to 3.55V, V_{DD} = 3.6V	100			mV
V_{CMR}	Common Mode Voltage Range	V_{ID} = 150 mV, V_{DD} = 3.6V	0.05		3.55	V
C_{IN2}	Input Capacitance	IN+ or IN− to V_{SS}		3.5		pF
I_{IN}	Input Current	V_{IN} = 3.6V, $V_{DD} = V_{DDMAX}$ or 0V	−10		+10	µA
		V_{IN} = 0V, $V_{DD} = V_{DDMAX}$ or 0V	−10		+10	µA
LVDS OUTPUT DC SPECIFICATIONS (OUT0±, OUT1±)						
V_{OD}	Differential Output Voltage, 0% Pre-emphasis (2)	R_L = 100Ω between OUT+ and OUT−	250	400	575	mV
ΔV_{OD}	Change in V_{OD} between Complementary States		−35		35	mV
V_{OS}	Offset Voltage (3)		1.09	1.25	1.475	V
ΔV_{OS}	Change in V_{OS} between Complementary States		−35		35	mV
I_{OS}	Output Short Circuit Current, One Complementary Output	OUT+ or OUT− Short to GND		−60	-90	mA
C_{OUT}	Output Capacitance	OUT+ or OUT− to GND when TRI-STATE		5.5		pF
SUPPLY CURRENT (Static)						
I_{CC0}	Supply Current	All inputs and outputs enabled and active, terminated with differential load of 100Ω between OUT+ and OUT-.		42	60	mA
I_{CC1}	Supply Current - one channel powered down	Single channel crossover switch or single channel repeater modes (1 channel active, one channel in power down mode)		22	30	mA
I_{CC2}	Supply Current - one input powered down	Splitter mode (One input powered down, both outputs active)		30	40	mA
I_{CCZ}	TRI-STATE Supply Current	Both input/output Channels in Power Down Mode		1.4	2.5	mA
SWITCHING CHARACTERISTICS—LVDS OUTPUTS (Figure 4, Figure 5)						
t_{LHT}	Differential Low to High Transition Time	Use an alternating 1 and 0 pattern at 200 Mb/s, measure between 20% and 80% of V_{OD}.	70	150	215	ps
t_{HLT}	Differential High to Low Transition Time		50	135	180	ps
t_{PLHD}	Differential Low to High Propagation Delay	Use an alternating 1 and 0 pattern at 200 Mb/s, measure at 50% V_{OD} between input to output.	0.5	2.4	3.5	ns
t_{PHLD}	Differential High to Low Propagation Delay		0.5	2.4	3.5	ns
t_{SKD1}	Pulse Skew	$\lvert t_{PLHD} - t_{PHLD} \rvert$		55	120	ps

(1) Typical parameters are measured at V_{DD} = 3.3V, T_A = 25°C. They are for reference purposes, and are not production-tested.
(2) Differential output voltage V_{OD} is defined as ABS(OUT+–OUT−). Differential input voltage V_{ID} is defined as ABS(IN+–IN−).
(3) Output offset voltage V_{OS} is defined as the average of the LVDS single-ended output voltages at logic high and logic low states.

Copyright © 2008–2013, Texas Instruments Incorporated

Electrical Characteristics (continued)

Over recommended operating supply and temperature ranges unless other specified.

Symbol	Parameter	Conditions	Min	Typ (1)	Max	Units
t_{SKCC}	Output Channel to Channel Skew	Difference in propagation delay (t_{PLHD} or t_{PHLD}) among all output channels in Splitter mode (any one input to all outputs).	0	130	315	ps
t_{JIT}	Jitter (4)	RJ - Clock Pattern 750 MHz (5)		1.4	2.5	psrms
		DJ - K28.5 Pattern 1.5 Gbps (6)		42	75	psp-p
		TJ - PRBS 2^{23}-1 Pattern 1.5 Gbps (7)		93	126	psp-p
t_{ON}	LVDS Output Enable Time	Time from $\overline{ENx}$ to OUT± change from TRI-STATE to active.	50	110	150	ns
t_{OFF}	LVDS Output Disable Time	Time from $\overline{ENx}$ to OUT± change from active to TRI-STATE.		5	12	ns
t_{SW}	LVDS Switching Time SELx to OUT±	Time from configuration select (SELx) to new switch configuration effective for OUT±.		110	150	ns

(4) Jitter is not production tested, but guaranteed through characterization on a sample basis.
(5) Random Jitter, or RJ, is measured RMS with a histogram including 1500 histogram window hits. The input voltage = V_{ID} = 500mV, 50% duty cycle at 750MHz, t_r = t_f = 50ps (20% to 80%).
(6) Deterministic Jitter, or DJ, is measured to a histogram mean with a sample size of 350 hits. The input voltage = V_{ID} = 500mV, K28.5 pattern at 1.5 Gbps, t_r = t_f = 50ps (20% to 80%). The K28.5 pattern is repeating bit streams of (0011111010 1100000101).
(7) Total Jitter, or TJ, is measured peak to peak with a histogram including 3500 window hits. Stimulus and fixture jitter has been subtracted. The input voltage = V_{ID} = 500mV, 2^{23}-1 PRBS pattern at 1.5 Gbps, t_r = t_f = 50ps (20% to 80%).

Copyright © 2008–2013, Texas Instruments Incorporated

Timing Diagrams

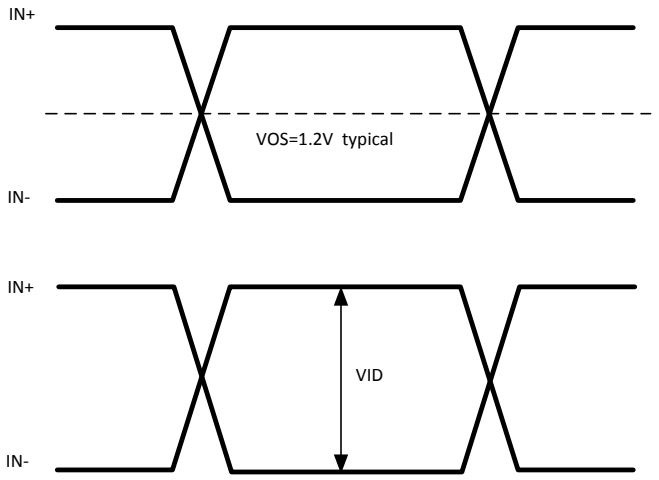

Figure 4. LVDS Signals

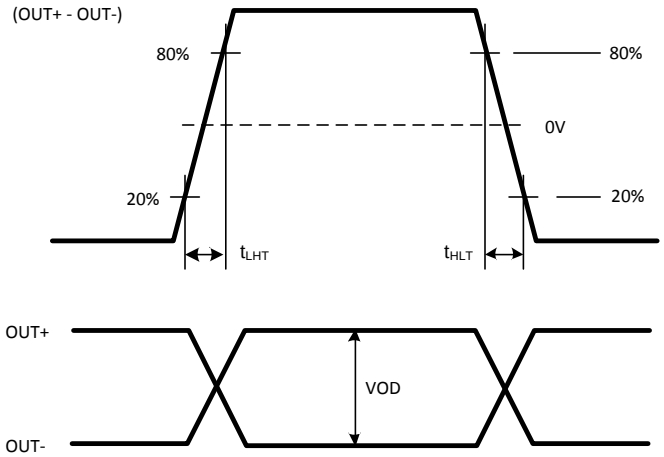

Figure 5. LVDS Output Transition Time

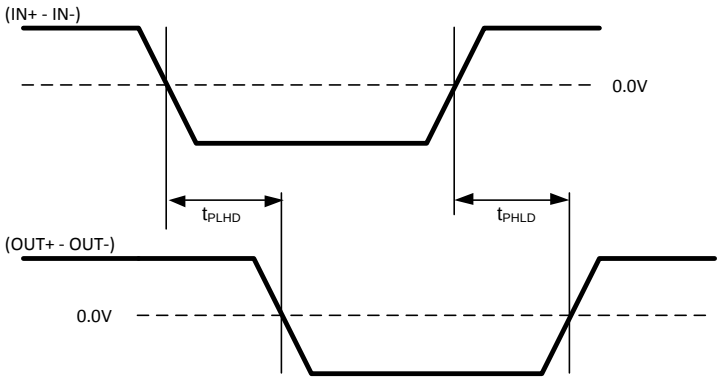

Figure 6. LVDS Output Propagation Delay

Copyright © 2008–2013, Texas Instruments Incorporated

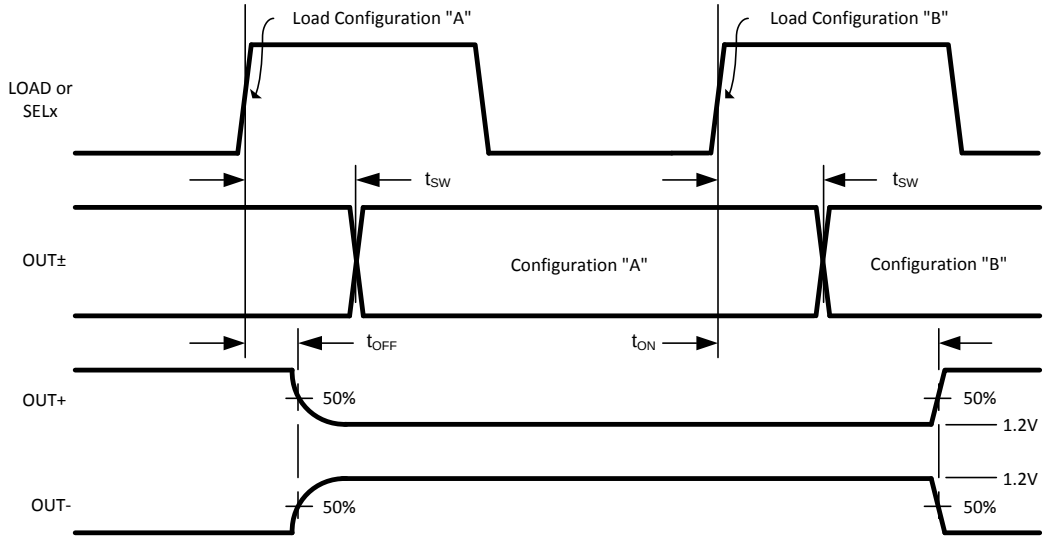

Figure 7. Configuration and Output Enable/Disable Timing

Typical Performance

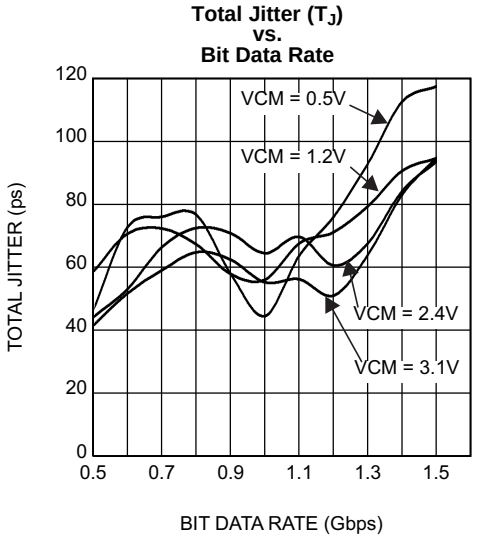

Total Jitter measured at 0V differential while running a PRBS 2^{23}-1 pattern in single channel repeater mode.
V_{CC} = 3.3V, T_A = +25°C, V_{ID} = 0.5V

Figure 8.

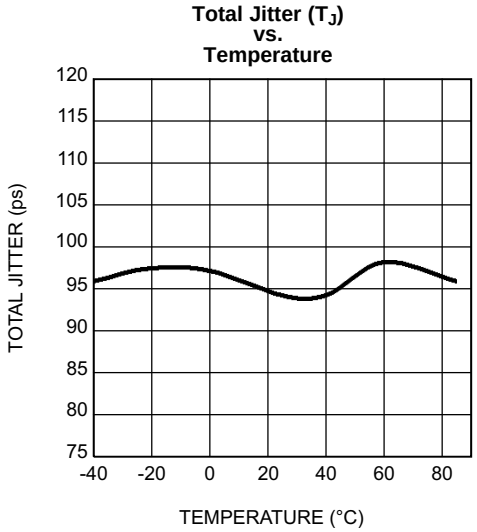

Total Jitter measured at 0V differential while running a PRBS 2^{23}-1 pattern in dual channel repeater mode.
V_{CC} = 3.3V, V_{ID} = 0.5V, V_{CM} = 1.2V, 1.5 Gbps data rate

Figure 9.

Copyright © 2008–2013, Texas Instruments Incorporated

REVISION HISTORY

Changes from Original (March 2013) to Revision A	Page
• Changed layout of National Data Sheet to TI format	9

Copyright © 2008–2013, Texas Instruments Incorporated

PACKAGING INFORMATION

Orderable Device	Status (1)	Package Type	Package Drawing	Pins	Package Qty	Eco Plan (2)	Lead/Ball Finish (6)	MSL Peak Temp (3)	Op Temp (°C)	Device Marking (4/5)	Samples
DS90CP02SP/NOPB	ACTIVE	UQFN	NJD	28	1000	Green (RoHS & no Sb/Br)	SN	Level-3-260C-168 HR	-40 to 85	CP02SP	Samples

(1) The marketing status values are defined as follows:
ACTIVE: Product device recommended for new designs.
LIFEBUY: TI has announced that the device will be discontinued, and a lifetime-buy period is in effect.
NRND: Not recommended for new designs. Device is in production to support existing customers, but TI does not recommend using this part in a new design.
PREVIEW: Device has been announced but is not in production. Samples may or may not be available.
OBSOLETE: TI has discontinued the production of the device.

(2) **RoHS:** TI defines "RoHS" to mean semiconductor products that are compliant with the current EU RoHS requirements for all 10 RoHS substances, including the requirement that RoHS substance do not exceed 0.1% by weight in homogeneous materials. Where designed to be soldered at high temperatures, "RoHS" products are suitable for use in specified lead-free processes. TI may reference these types of products as "Pb-Free".
RoHS Exempt: TI defines "RoHS Exempt" to mean products that contain lead but are compliant with EU RoHS pursuant to a specific EU RoHS exemption.
Green: TI defines "Green" to mean the content of Chlorine (Cl) and Bromine (Br) based flame retardants meet JS709B low halogen requirements of <=1000ppm threshold. Antimony trioxide based flame retardants must also meet the <=1000ppm threshold requirement.

(3) MSL, Peak Temp. - The Moisture Sensitivity Level rating according to the JEDEC industry standard classifications, and peak solder temperature.

(4) There may be additional marking, which relates to the logo, the lot trace code information, or the environmental category on the device.

(5) Multiple Device Markings will be inside parentheses. Only one Device Marking contained in parentheses and separated by a "~" will appear on a device. If a line is indented then it is a continuation of the previous line and the two combined represent the entire Device Marking for that device.

(6) Lead/Ball Finish - Orderable Devices may have multiple material finish options. Finish options are separated by a vertical ruled line. Lead/Ball Finish values may wrap to two lines if the finish value exceeds the maximum column width.

Important Information and Disclaimer: The information provided on this page represents TI's knowledge and belief as of the date that it is provided. TI bases its knowledge and belief on information provided by third parties, and makes no representation or warranty as to the accuracy of such information. Efforts are underway to better integrate information from third parties. TI has taken and continues to take reasonable steps to provide representative and accurate information but may not have conducted destructive testing or chemical analysis on incoming materials and chemicals. TI and TI suppliers consider certain information to be proprietary, and thus CAS numbers and other limited information may not be available for release.

In no event shall TI's liability arising out of such information exceed the total purchase price of the TI part(s) at issue in this document sold by TI to Customer on an annual basis.

TAPE AND REEL INFORMATION

REEL DIMENSIONS

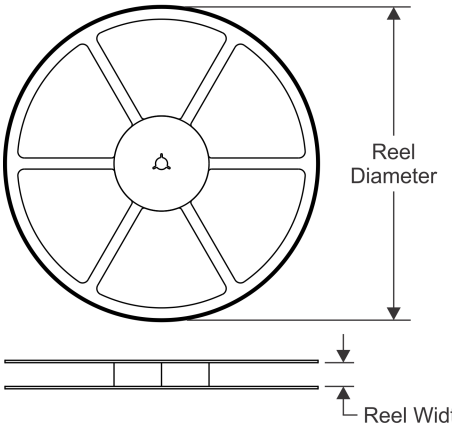

TAPE DIMENSIONS

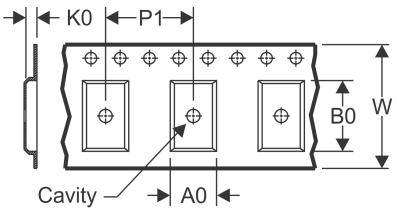

A0	Dimension designed to accommodate the component width
B0	Dimension designed to accommodate the component length
K0	Dimension designed to accommodate the component thickness
W	Overall width of the carrier tape
P1	Pitch between successive cavity centers

QUADRANT ASSIGNMENTS FOR PIN 1 ORIENTATION IN TAPE

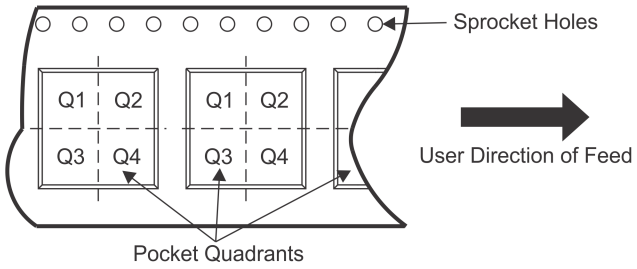

*All dimensions are nominal

Device	Package Type	Package Drawing	Pins	SPQ	Reel Diameter (mm)	Reel Width W1 (mm)	A0 (mm)	B0 (mm)	K0 (mm)	P1 (mm)	W (mm)	Pin1 Quadrant
DS90CP02SP/NOPB	UQFN	NJD	28	1000	178.0	12.4	5.3	5.3	1.3	8.0	12.0	Q1

TAPE AND REEL BOX DIMENSIONS

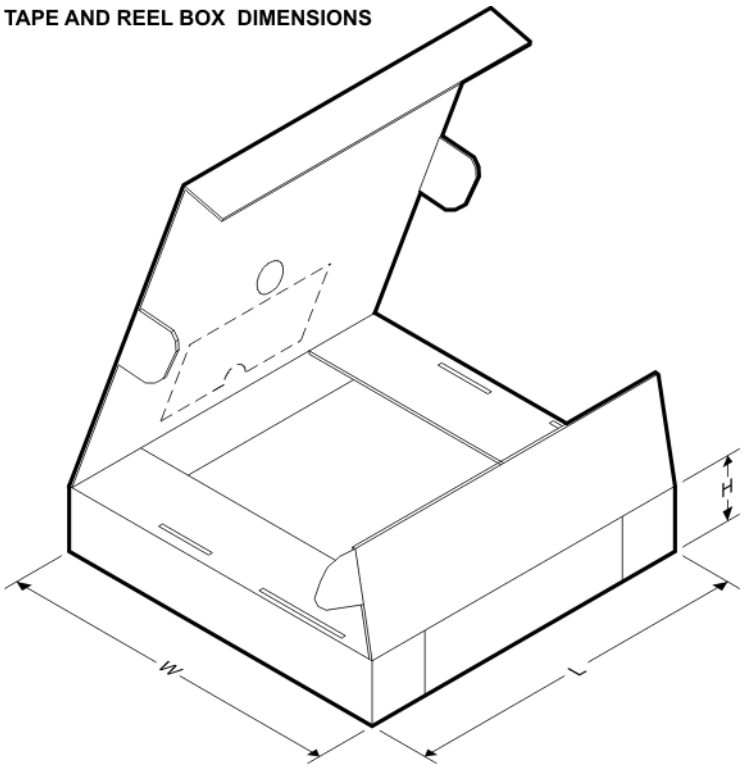

*All dimensions are nominal

Device	Package Type	Package Drawing	Pins	SPQ	Length (mm)	Width (mm)	Height (mm)
DS90CP02SP/NOPB	UQFN	NJD	28	1000	210.0	185.0	35.0

NJD0028A

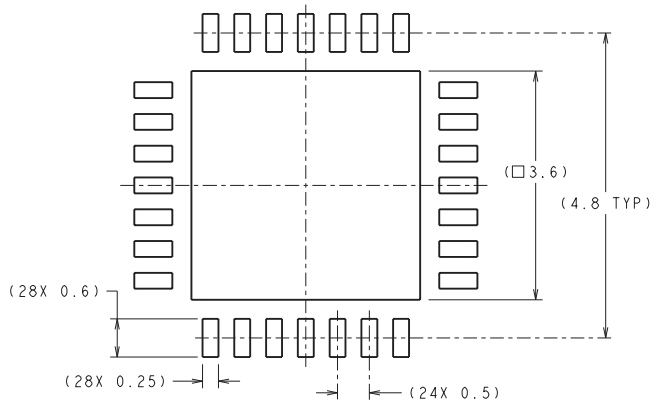

RECOMMENDED LAND PATTERN

DIMENSIONS ARE IN MILLIMETERS
DIMENSIONS IN ( ) FOR REFERENCE ONLY

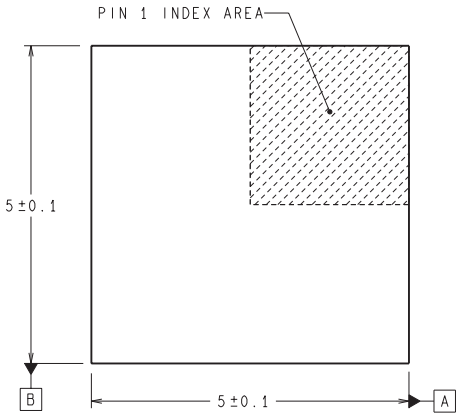

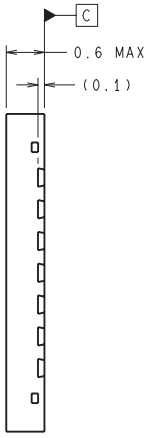

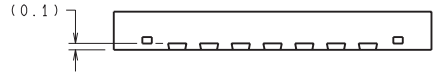

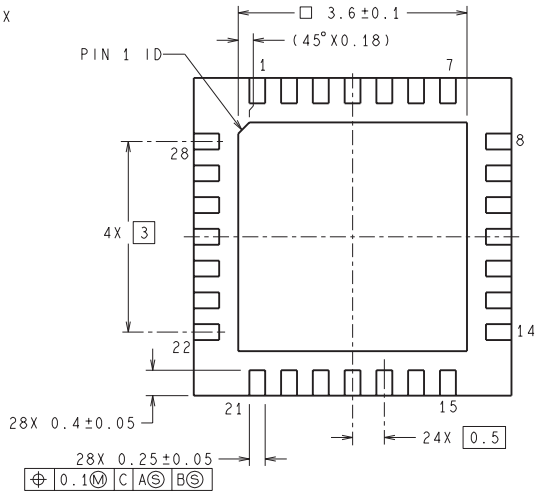

SPA28A (Rev A)

IMPORTANT NOTICE AND DISCLAIMER

TI PROVIDES TECHNICAL AND RELIABILITY DATA (INCLUDING DATASHEETS), DESIGN RESOURCES (INCLUDING REFERENCE DESIGNS), APPLICATION OR OTHER DESIGN ADVICE, WEB TOOLS, SAFETY INFORMATION, AND OTHER RESOURCES “AS IS” AND WITH ALL FAULTS, AND DISCLAIMS ALL WARRANTIES, EXPRESS AND IMPLIED, INCLUDING WITHOUT LIMITATION ANY IMPLIED WARRANTIES OF MERCHANTABILITY, FITNESS FOR A PARTICULAR PURPOSE OR NON-INFRINGEMENT OF THIRD PARTY INTELLECTUAL PROPERTY RIGHTS.

These resources are intended for skilled developers designing with TI products. You are solely responsible for (1) selecting the appropriate TI products for your application, (2) designing, validating and testing your application, and (3) ensuring your application meets applicable standards, and any other safety, security, or other requirements. These resources are subject to change without notice. TI grants you permission to use these resources only for development of an application that uses the TI products described in the resource. Other reproduction and display of these resources is prohibited. No license is granted to any other TI intellectual property right or to any third party intellectual property right. TI disclaims responsibility for, and you will fully indemnify TI and its representatives against, any claims, damages, costs, losses, and liabilities arising out of your use of these resources.

TI’s products are provided subject to TI’s Terms of Sale (www.ti.com/legal/termsofsale.html) or other applicable terms available either on ti.com or provided in conjunction with such TI products. TI’s provision of these resources does not expand or otherwise alter TI’s applicable warranties or warranty disclaimers for TI products.

Mailing Address: Texas Instruments, Post Office Box 655303, Dallas, Texas 75265
Copyright © 2020, Texas Instruments Incorporated