Online data sheet



DS500-N511

Dx500

LONG RANGE DISTANCE SENSORS

SICK
Sensor Intelligence.



Ordering information

Type	Part no.
DS500-N511	1040483

Other models and accessories → www.sick.com/Dx500

Detailed technical data

Performance

Measuring range	0.2 m ... 70 m, 90 % remission [1) 2)] 0.2 m ... 30 m, 6 % remission [1) 2)]
Resolution	≤ 1 mm
Accuracy	± 3 mm
Response time	150 ms ... 6,000 ms
Light source	Laser, red [3)]
Laser class	2 (EN 60825/21 CFR 1.040)
Typ. light spot size (distance)	10 mm (at 7 m) 45 mm (at 30 m) 100 mm (at 70 m)

1) In ambient light, max. 1 klx of constant light.
2) Unique up to 150 m.
3) Average service life of 50,000 h at T_A = +25 °C.

Interfaces

Switching output	NPN (< 100 mA) [1)]
Multifunctional input (MF)	< 2 V [2) 3)]
Hysteresis	± 6 %

1) PNP: HIGH = V_S - (< 2.5 V) / LOW = < 2.5 V; NPN: HIGH = < 2.5 V / LOW = V_S.
2) Refer to function MF input.
3) NPN < 2 V.

Mechanics/electronics

Supply voltage V_S	DC 10 V ... 30 V, reverse polarity protected U_V ≥ DC 24 V for devices with heating
Ripple	5 V_{pp} [1)]
Power consumption	Typ. 3 W
Initialization time	500 ms
Connection type	Male connector, M12, 5-pin
Weight	1,000 g

1) May not fall short of or exceed V_S tolerances.

Ambient data

Enclosure rating	IP 65
Protection class	II [1]
Electromagnetic compatibility (EMC)	EN 61000-6-2, EN 55011 EN 60947-5-7: 2003-9
Ambient temperature	Operation: –10 °C ... +45 °C Operation with cooling case: –10 °C ... +75 °C Storage: –25 °C ... +75 °C
Temperature drift	Typ. 0.05 mm/K
Mechanical load	Shock: EN 600 68-2-27 Sine: EN 600 68-2-6 Noise: EN 600 68-2-64

[1] Reference voltage DC 32 V.

Dimensional drawing (Dimensions in mm (inch))

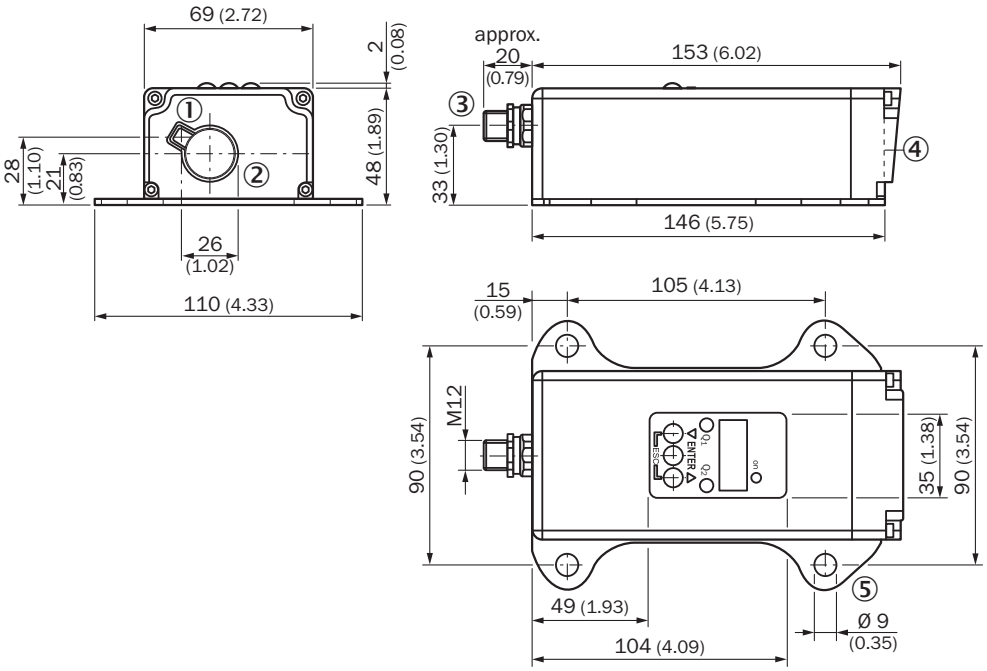

① Optical axis, sender
② Optical axis, receiver
③ Male connector M12, 5-pin
④ Zero level
⑤ Fixing hole

Connection type

Male connector M12, 5-pin

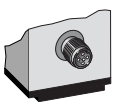

Connection diagram

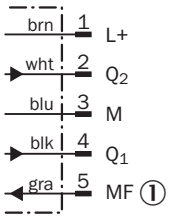

① Multifunctional input (MF)

Adjustment possible

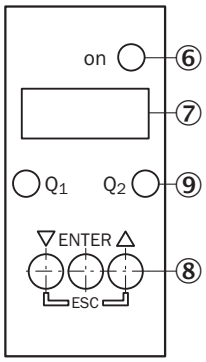

⑥ Operating indicator
⑦ Indicator panel, 7-segment display
⑧ Control panel
⑨ Switching output display

Functional principle

Additional information

Extern Teach ET via MF ①

Teach-in	MF active	Model
Q_1	100 ms	Current measurement value is used as switching threshold
$\overline{Q}_1$	200 ms	
Q_2	300 ms	
$\overline{Q}_2$	400 ms	
Laser off	> 450 ms	

① Multi functional input.

Error performance or no object in measurement range

Measurement not possible

Measurement value output display	Switching outputs
0.000	Switching stage ≙ measurement value 0 m

No object in measurement range or laser off

Measurement value output display	Switching outputs
99.99	Switching stage ≙ measurement value 99.99 m

Function MF input

Function MF input

Teach in	Q_1	60 ms < MF < 150 ms
Teach in	$\overline{Q}_1$	150 ms < MF < 250 ms
Teach in	Q_2	250 ms < MF < 350 ms
Teach in	$\overline{Q}_2$	350 ms < MF < 450 ms
Laser off	–	450 ms < MF < ∞

Recommended accessories

Other models and accessories ➜ www.sick.com/Dx500

	Brief description	Type	Part no.
Terminal and alignment brackets			
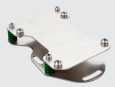	Alignment unit for DS/DT500, stainless steel (1.4541), incl. mounting material, mounting hardware included	BEF-DSDT	2031377
Plug connectors and cables			
	Head A: female connector, M12, 5-pin, straight Head B: cable Cable: PVC, unshielded, 2 m	DOL-1205-G02M	6008899
	Head A: female connector, M12, 5-pin, straight Head B: cable Cable: PVC, unshielded, 5 m	DOL-1205-G05M	6009868
	Head A: female connector, M12, 5-pin, straight Head B: cable Cable: PVC, unshielded, 10 m	DOL-1205-G10M	6010544

SICK AT A GLANCE

SICK is one of the leading manufacturers of intelligent sensors and sensor solutions for industrial applications. A unique range of products and services creates the perfect basis for controlling processes securely and efficiently, protecting individuals from accidents and preventing damage to the environment.

We have extensive experience in a wide range of industries and understand their processes and requirements. With intelligent sensors, we can deliver exactly what our customers need. In application centers in Europe, Asia and North America, system solutions are tested and optimized in accordance with customer specifications. All this makes us a reliable supplier and development partner.

Comprehensive services complete our offering: SICK LifeTime Services provide support throughout the machine life cycle and ensure safety and productivity.

For us, that is “Sensor Intelligence.”

WORLDWIDE PRESENCE:

Contacts and other locations –www.sick.com