Rev 0; 4/05

DS3988

8-Channel Cold-Cathode Fluorescent Lamp Controller

General Description

The DS3988 is an 8-channel controller for cold-cathode fluorescent lamps (CCFLs) used to backlight liquid crystal displays (LCDs) in TV and PC monitor applications. The DS3988 supports configurations of 1 to 8 lamps, and multiple DS3988 controllers can be cascaded to support applications requiring more than 8 lamps.

Applications

LCD Televisions

LCD PC Monitors

Ordering Information

PART	TEMP RANGE	PIN-PACKAGE
DS3988T	-40°C to +85°C	48 TQFP
DS3988T+	-40°C to +85°C	48 TQFP

+Denotes lead-free package.

Pin Configuration

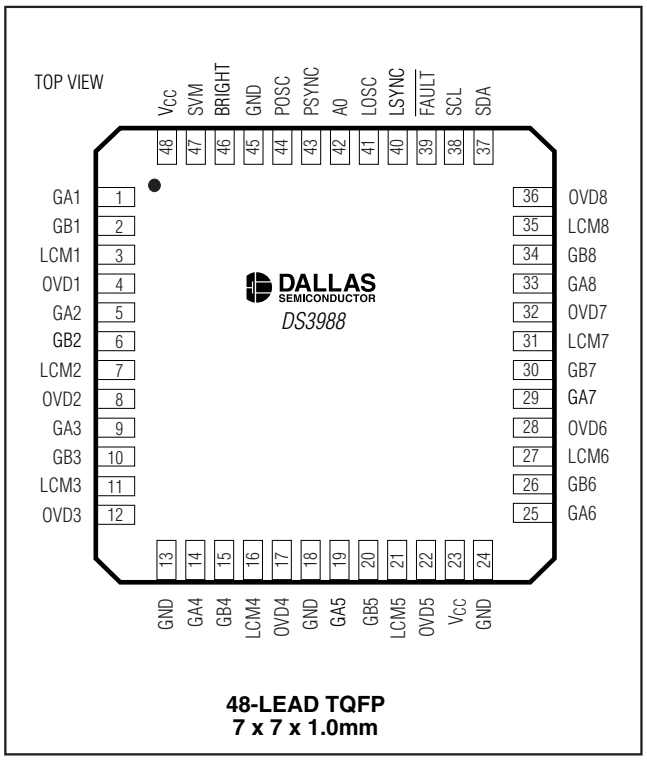

48-LEAD TQFP
7 x 7 x 1.0mm

Typical Operating Circuit appears at end of data sheet.

Features

- **High-Density CCFL Controller for LCD TV and PC Monitor Backlights**
- **Can Be Easily Cascaded to Support More Than 8 Lamps**
- **Minimal External Components**
- **Analog Brightness Control**
- **Per-Channel Lamp Control Ensures Equal Brightness Among Lamps and Maximizes Lamp Life**
- **Gate Driver Phasing Minimizes DC Supply Current Surges**
- **Per-Channel Lamp Fault Monitoring for Lamp Open, Lamp Overcurrent, Failure to Strike, and Overvoltage Conditions**
- **Accurate (±5%) Independent On-Board Oscillators for Lamp Frequency (40kHz to 80kHz) and DPWM Burst Dimming Frequency (22.5Hz to 440Hz)**
- **Can Be Synchronized to External Sources for the Lamp and DPWM Frequencies**
- **<10% to 100% Dimming Range**
- **Programmable Soft-Start Minimizes Audible Transformer Noise**
- **I²C-Compatible Serial Port and On-Board Nonvolatile (NV) Memory Allow Device Customization**
- **8-Byte NV User Memory for Storage of Serial Numbers and Date Codes**
- **4.5V to 5.5V Single-Supply Operation**
- **-40°C to +85°C Temperature Range**
- **48-Lead TQFP (7mm x 7mm) Package**

I²C is a trademark of Philips Corp. Purchase of I²C components from Maxim Integrated Products, Inc., or one of its sublicensed Associated Companies, conveys a license under the Philips I²C Patent Rights to use these components in an I²C system, provided that the system conforms to the I²C Standard Specification as defined by Philips.

For pricing, delivery, and ordering information, please contact Maxim/Dallas Direct! at 1-888-629-4642, or visit Maxim's website at www.maxim-ic.com.

8-Channel Cold-Cathode Fluorescent Lamp Controller

ABSOLUTE MAXIMUM RATINGS

Voltage on V_{CC}, SDA, and SCL
Relative to Ground.....-0.5V to +6.0V
Voltage on Leads Other than V_{CC},
SDA, and SCL.....-0.5V to (V_{CC} + 0.5V),
not to exceed +6.0V

Operating Temperature Range .....-40°C to +85°C
EEPROM Programming Temperature Range .....0°C to +70°C
Storage Temperature Range .....-55°C to +125°C
Soldering Temperature.....See J-STD-020 Specification

Stresses beyond those listed under "Absolute Maximum Ratings" may cause permanent damage to the device. These are stress ratings only, and functional operation of the device at these or any other conditions beyond those indicated in the operational sections of the specifications is not implied. Exposure to absolute maximum rating conditions for extended periods may affect device reliability.

RECOMMENDED OPERATING CONDITIONS

(T_A = -40°C to +85°C.)

PARAMETER	SYMBOL	CONDITIONS	MIN	TYP	MAX	UNITS
Supply Voltage	V_{CC}	(Note 1)	4.5		5.5	V
Input Logic 1	V_{IH}		0.7 x V_{CC}		V_{CC} + 0.3	V
Input Logic 0	V_{IL}		-0.3		0.3 x V_{CC}	V
SVM Voltage Range	V_{SVM}		-0.3		V_{CC} + 0.3	V
BRIGHT Voltage Range	V_{BRIGHT}		-0.3		V_{CC} + 0.3	V
LCM Voltage Range	V_{LCM}	(Note 2)	-0.3		V_{CC} + 0.3	V
OVD Voltage Range	V_{OVD}	(Note 2)	-0.3		V_{CC} + 0.3	V
Gate-Driver Output Charge Loading	Q_G				20	nC

ELECTRICAL CHARACTERISTICS

(V_{CC} = +4.5V to +5.5V, T_A = -40°C to +85°C.)

PARAMETER	SYMBOL	CONDITIONS	MIN	TYP	MAX	UNITS
Supply Current	I_{CC}	G_A, G_B loaded with 600pF, 8 channels active		15	20	mA
Input Leakage (Digital Pins)	I_L		-1.0		+1.0	µA
Output Leakage (SDA, $\overline{FAULT}$)	I_{LO}	High impedance	-1.0		+1.0	µA
Low-Level Output Voltage (SDA, Fault)	V_{OL1}	I_{OL1} = 3mA			0.4	V
	V_{OL2}	I_{OL2} = 6mA			0.6	
Low-Level Output Voltage (PSYNC, LSYNC)	V_{OL3}	I_{OL3} = 4mA			0.4	V
Low-Level Output Voltage (GA, GB)	V_{OL4}	I_{OL4} = 4mA			0.4	V
High-Level Output Voltage (PSYNC, LSYNC)	V_{OH1}	I_{OH1} = -1mA	V_{CC} - 0.4			V

ELECTRICAL CHARACTERISTICS (continued)

(V_{CC} = +4.5V to +5.5V, T_A = -40°C to +85°C.)

PARAMETER	SYMBOL	CONDITIONS	MIN	TYP	MAX	UNITS
High-Level Output Voltage (GA, GB)	V_{OH2}	I_{OH2} = -1mA	V_{CC} - 0.4			V
UVLO Threshold—V_{CC} Rising	V_{UVLOR}				4.3	V
UVLO Threshold—V_{CC} Falling	V_{UVLOF}		3.7			V
UVLO Hysteresis	V_{UVLOH}			100		mV
SVM Threshold	V_{SVMT}		1.8	2.0	2.2	V
SVM Hysteresis	V_{SVMH}			50		mV
LCM and OVD Source Current				4		µA
LCM and OVD Sink Current				4		µA
LCM and OVD DC Bias Voltage	V_{DCB}			1.35		V
LCM and OVD Input Resistance	R_{DCB}			50		kΩ
Lamp Off Threshold	V_{LOT}	(Note 3)	0.3	0.4	0.5	V
Lamp Overcurrent Threshold	V_{LOC}	(Note 3)	1.8	2.0	2.2	V
Lamp Regulation Threshold	V_{LRT}	(Note 3)	0.9	1.0	1.1	V
OVD Threshold	V_{OVDT}	(Note 3)	0.9	1.0	1.1	V
Lamp Frequency Range	$f_{LF:OSC}$		40		80	kHz
Lamp Frequency Source Frequency Tolerance	$f_{LFS:TOL}$	LOSC resistor ±2% over temperature	-5		+5	%
Lamp Frequency Receiver Duty Cycle	$f_{LFR:DUTY}$		40		60	%
DPWM Frequency Range	$f_{D:OSC}$		22.5		440.0	Hz
DPWM Source Frequency Tolerance	$f_{DSR:TOL}$	POSC resistor ±2% over temperature	-5		+5	%
DPWM Receiver Duty Cycle	$f_{DFE:DUTY}$		40		60	%
DPWM Receiver Frequency Range	$f_{DR:OSC}$		22.5		440.0	Hz
DPWM Receiver Minimum Pulse Width	$t_{DR:MIN}$	(Note 4)	25			µs
BRIGHT Voltage—Minimum Brightness	V_{BMIN}				0.5	V
BRIGHT Voltage—Maximum Brightness	V_{BMAX}		2.0			V
Gate-Driver Output Rise/Fall Time	t_R/t_F	C_L = 600pF			100	ns
GAn and GBn Duty Cycle		(Note 5)			44	%

8-Channel Cold-Cathode Fluorescent Lamp Controller

I²C AC ELECTRICAL CHARACTERISTICS (See Figure 9)

(V_{CC} = +4.5V to +5.5V, timing referenced to $V_{IL(MAX)}$ and $V_{IH(MIN)}$, T_A = -40°C to +85°C.)

PARAMETER	SYMBOL	CONDITIONS	MIN	TYP	MAX	UNITS
SCL Clock Frequency	f_{SCL}	(Note 6)	0		400	kHz
Bus Free Time Between Stop and Start Conditions	t_{BUF}		1.3			µs
Hold Time (Repeated) Start Condition	$t_{HD:STA}$	(Note 7)	0.6			µs
Low Period of SCL	t_{LOW}		1.3			µs
High Period of SCL	t_{HIGH}		0.6			µs
Data Hold Time	$t_{HD:DAT}$		0		0.9	µs
Data Setup Time	$t_{SU:DAT}$		100			ns
Start Setup Time	$t_{SU:STA}$		0.6			µs
SDA and SCL Rise Time	t_R	(Note 8)	$20 + 0.1C_B$		300	ns
SDA and SCL Fall Time	t_F	(Note 8)	$20 + 0.1C_B$		300	ns
Stop Setup Time	$t_{SU:STO}$		0.6			µs
SDA and SCL Capacitive Loading	C_B	(Note 8)			400	pF
EEPROM Write Time	t_W	(Note 9)		20	30	ms

NONVOLATILE MEMORY CHARACTERISTICS

(V_{CC} = +4.5V to +5.5V)

PARAMETER	SYMBOL	CONDITIONS	MIN	TYP	MAX	UNITS
EEPROM Write Cycles		+70°C (Note 10)	50,000			Cycles

Note 1: All voltages are referenced to ground, unless otherwise noted. Currents into the IC are positive, out of the IC negative.

Note 2: During fault conditions, the AC-coupled feedback values are allowed to be outside the Absolute Max Rating of the LCM or OVD pin for up to 1 second.

Note 3: Voltage with respect to V_{DCB}.

Note 4: This is the minimum pulse width guaranteed to generate an output burst, which will generate the DS3988's minimum burst duty cycle. This duty cycle may be greater than the duty cycle of the PSYNC input. Once the duty cycle of the PSYNC input is greater than the DS3988's minimum duty cycle, the output's duty cycle will track the PSYNC's duty cycle. Leaving PSYNC low (0% duty cycle) disables the GAn and GBn outputs in DPWM Slave mode.

Note 5: This is the maximum lamp frequency duty cycle that will be generated at any of the GAn or GBn outputs.

Note 6: I²C interface timing shown is for fast-mode (400kHz) operation. This device is also backward compatible with I²C standard-mode timing.

Note 7: After this period, the first clock pulse can be generated.

Note 8: C_B—total capacitance allowed on one bus line in picofarads.

Note 9: EEPROM write time applies to all the EEPROM memory. EEPROM write begins after a stop condition occurs.

Note 10: Guaranteed by design.

Typical Operating Characteristics

(V_{CC} = +5.0V, T_A = +25°C, unless otherwise noted.)

ACTIVE SUPPLY CURRENT vs. SUPPLY VOLTAGE

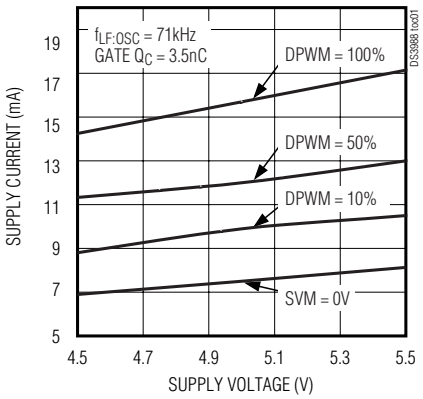

ACTIVE SUPPLY CURRENT vs. TEMPERATURE

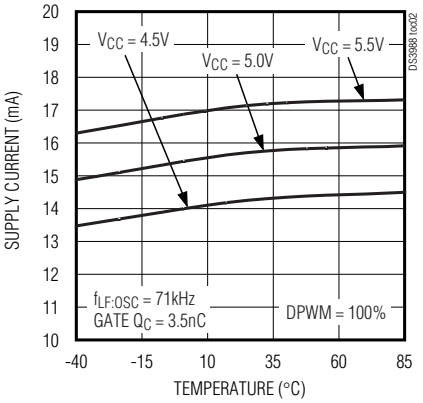

INTERNAL FREQUENCY CHANGE vs. TEMPERATURE

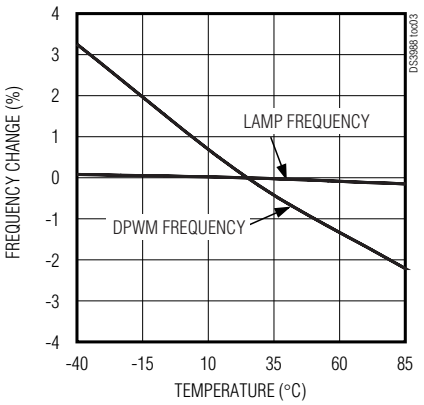

TYPICAL OPERATION AT 12V

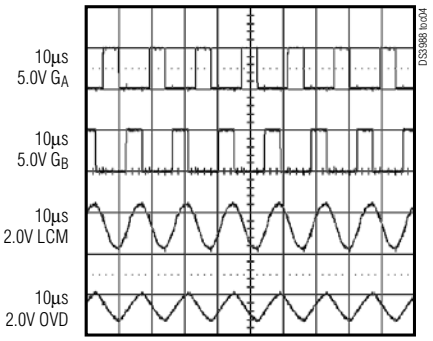

TYPICAL OPERATION AT 15V

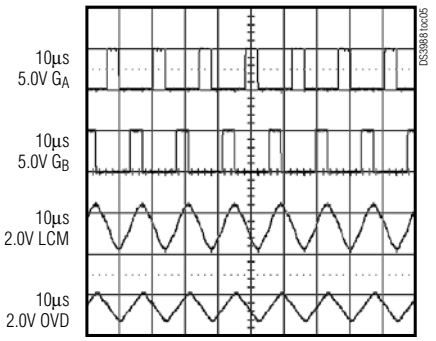

TYPICAL OPERATION AT 18V

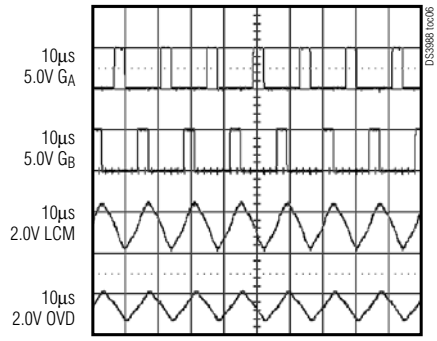

TYPICAL STARTUP WITH SVM

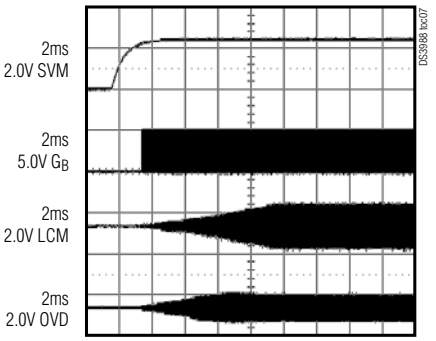

BURST DIMMING AT 150Hz AND 10%

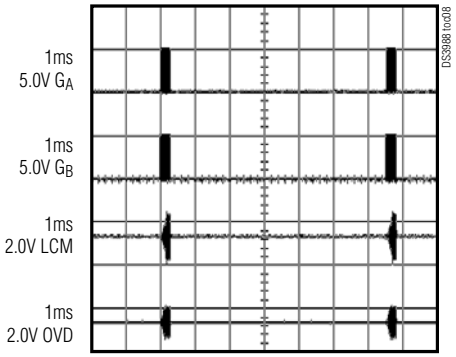

8-Channel Cold-Cathode Fluorescent Lamp Controller

Typical Operating Characteristics (continued)

(V_{CC} = +5.0V, T_A = +25°C, unless otherwise noted.)

BURST DIMMING AT 150Hz AND 50%

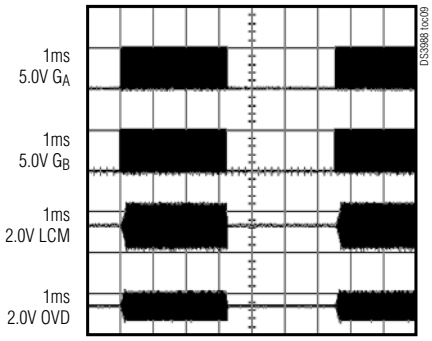

SOFT-START AT V_{INV} = 18V

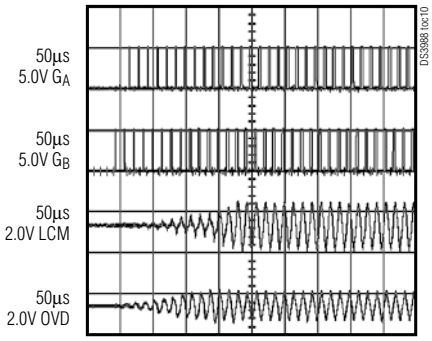

LAMP STRIKE—EXPANDED VIEW

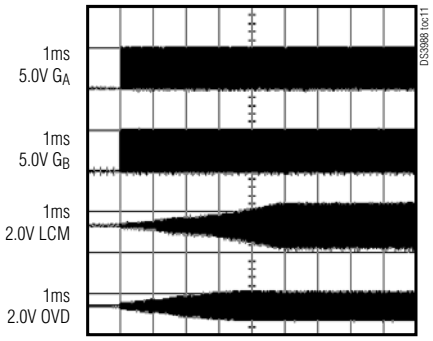

LAMP STRIKE WITH OPEN LAMP AUTORETRY ENABLED

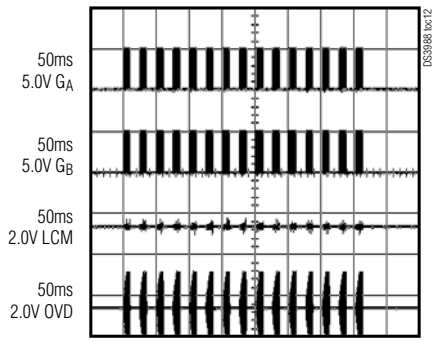

LAMP STRIKE WITH OPEN LAMP AUTORETRY DISABLED

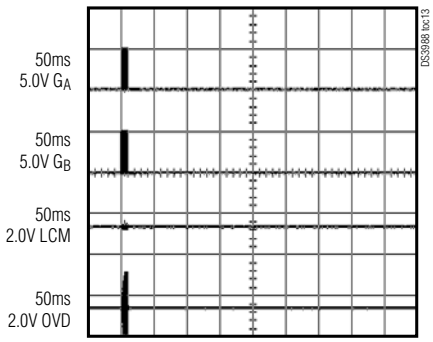

STAGGERED BURST DIMMING START

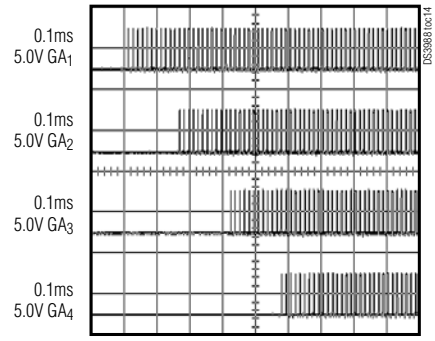

LAMP-OUT (LAMP OPENED) AUTORETRY DISABLED

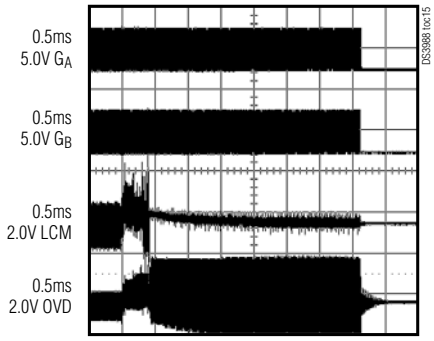

LAMP-OUT (LAMP OPENED) AUTORETRY ENABLED

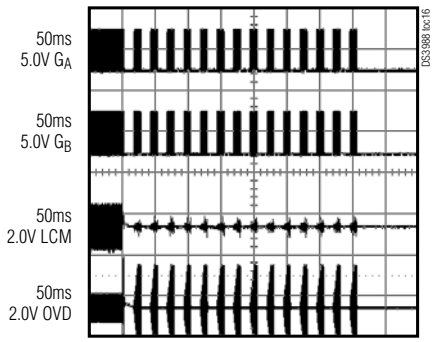

Pin Description

NAME	PINS BY CHANNEL (n = 1–8)								DESCRIPTION
	CH 1	CH 2	CH 3	CH 4	CH 5	CH 6	CH 7	CH 8	
GAn	1	5	9	14	19	25	29	33	MOSFET A Gate Drive. Connect directly to logic-level mode n-channel MOSFET. Leave open if channel is unused.
GBn	2	6	10	15	20	26	30	34	MOSFET B Gate Drive. Connect directly to logic-level mode n-channel MOSFET. Leave open if channel is unused.
LCMn	3	7	11	16	21	27	31	35	Lamp Current Monitor Input. Lamp current is monitored by measuring a voltage across a resistor placed in series with the low-voltage side of the lamp. Leave open if channel is unused.
OVDn	4	8	12	17	22	28	32	36	Overvoltage Detection. Lamp voltage is monitored through a capacitor-divider placed on the high-voltage side of the transformer. Leave open if channel is unused.

NAME	PIN	DESCRIPTION
GND	13, 18, 24, 45	Ground Connection
V_{CC}	23, 48	Power-Supply Connection
SDA	37	Serial Data Input/Output. I^2C bidirectional data pin, which requires a pullup resistor to realize high logic levels.
SCL	38	Serial Clock Input. I^2C clock input.
$\overline{FAULT}$	39	Fault Output. Active-low, open-drain, requires external pullup resistor to realize high logic levels.
LSYNC	40	Lamp Frequency Input/Output. This pin is the input for an externally sourced lamp frequency when the DS3988 is configured as a lamp frequency receiver. If the DS3988 is configured as a lamp frequency source (i.e., the lamp frequency is generated internally), the frequency is output on this pin for use by other lamp frequency receiver DS3988s.
LOSC	41	Lamp Oscillator Resistor Adjust. A resistor to ground on this lead sets the frequency of the lamp oscillator.
A0	42	Address Select Input. Determines the DS3988's I^2C slave address.
PSYNC	43	DPWM Input/Output. This pin is the input for an externally generated DPWM signal when the DS3988 is configured as a DPWM receiver. If the DS3988 is configured as a DPWM source (i.e., the DPWM signal is generated internally), the DPWM signal is output on this pin for use by other DPWM receiver DS3988s.
POSC	44	DPWM Oscillator Resistor Adjust. A resistor to ground on this lead sets the frequency of the DPWM oscillator (dimming clock). This lead can optionally accept a 22.5Hz to 440Hz clock as the source timing for the internal DPWM signal.
BRIGHT	46	Analog Brightness Control Input. Used to control DPWM dimming. Ground when using a PWM signal at PSYNC to control brightness.
SVM	47	Supply Voltage Monitor Input. Used to monitor the inverter voltage for undervoltage conditions.

8-Channel Cold-Cathode Fluorescent Lamp Controller

Functional Diagram

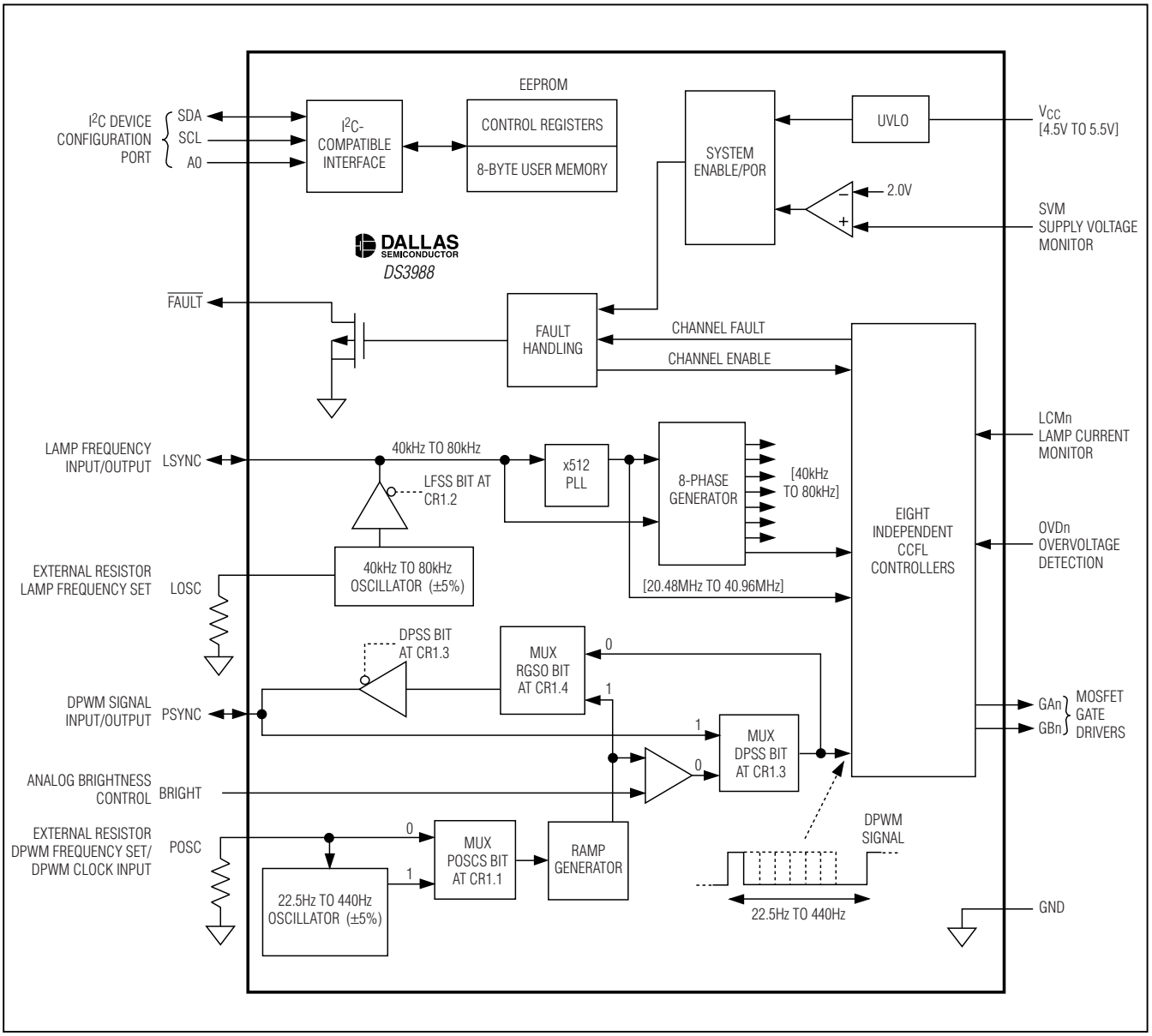

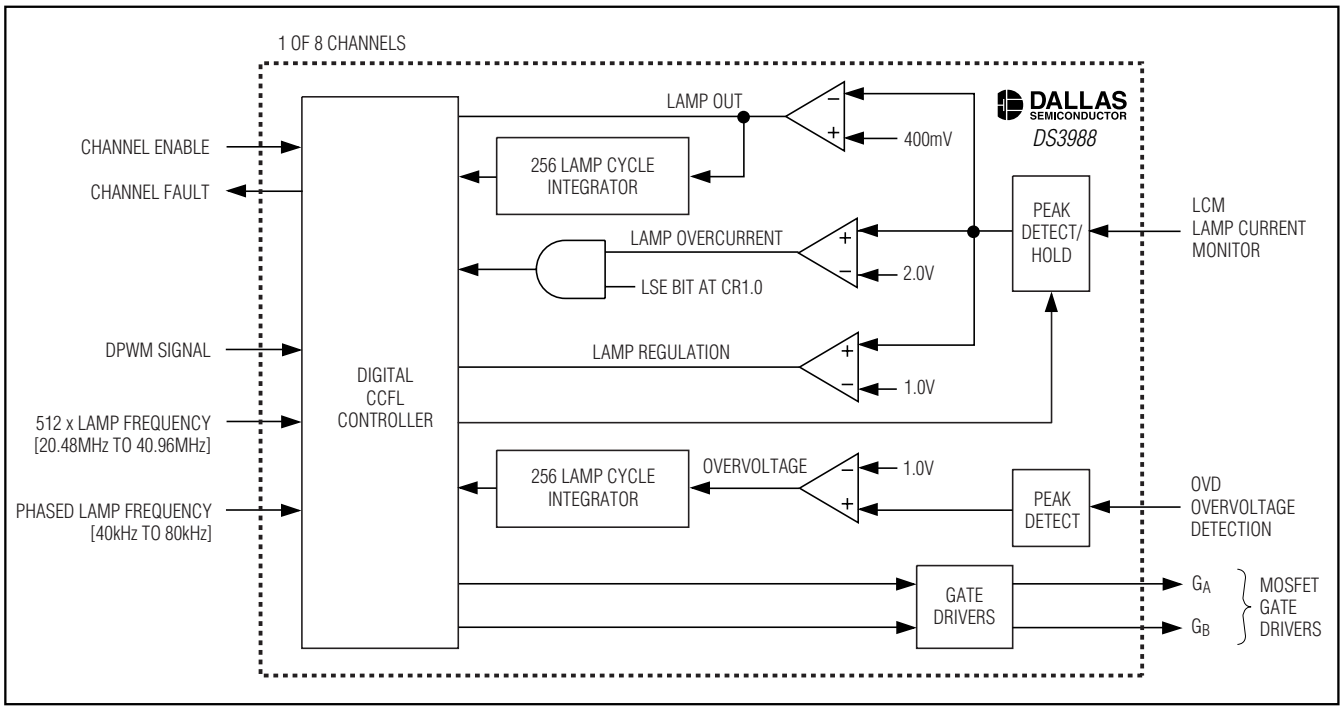

Figure 1. Per Channel Logic Diagram

Detailed Description

The DS3988 uses a push-pull drive scheme to convert a DC voltage (5V to 24V) to the high-voltage (600V_{RMS} to 1200V_{RMS}) AC waveform that is required to power the CCFLs. The push-pull drive scheme uses a minimal number of external components, which reduces assembly cost and makes the printed circuit board (PC board) design easy to implement. The push-pull drive scheme also provides an efficient DC-to-AC conversion and produces near-sinusoidal waveforms.

Each DS3988 channel drives two logic-level n-channel MOSFETs that are connected between the ends of a step-up transformer and ground (see Figure 1 and the *Typical Operating Circuit*). The transformer has a center tap on the primary side that is connected to a DC voltage supply. The DS3988 alternately turns on the two MOSFETs to create the high-voltage AC waveform on the secondary side. By varying the duration of the MOSFET turn-on times, the controller is able to accurately control the amount of current flowing through the CCFL.

A resistor in series with the CCFL's ground connection enables current monitoring. The voltage across this resistor is fed to the lamp current monitor (LCM) input on the DS3988. The DS3988 compares the peak resistor voltage against an internal reference voltage to determine the duty cycle for the MOSFET gates. Each CCFL receives independent current monitoring and control, which results in equal brightness across all of the lamps and maximizes the lamp's brightness and lifetime.

EEPROM Registers and I²C-Compatible Serial Interface

The DS3988 uses an I²C-compatible serial interface for communication with the on-board EEPROM configuration registers and user memory. The configuration registers—four Soft-Start Profile registers (SSP1/2/3/4) and two Control Registers (CR1/2)—allow the user to customize many DS3988 parameters such as the soft-start ramp rate, the lamp and dimming frequency sources, fault-monitoring options, and channel enabling/disabling. The eight bytes of nonvolatile user memory can be used to store manufacturing data such as date codes, serial numbers, or product identification numbers.

The device is shipped from the factory with the configuration registers programmed to a set of default configuration parameters. To inquire about custom factory programming, email MixedSignal.Apps@dalsemi.com.

8-Channel Cold-Cathode Fluorescent Lamp Controller

Channel Phasing

The lamp-frequency MOSFET gate turn-on times are equally phased among the eight channels during the burst period. This reduces the inrush current that would result from all lamps switching simultaneously, and hence eases the design requirements for the DC supply. Figure 2 details how the eight channels are phased. Note that it is the lamp-frequency signals that are phased, NOT the DPWM signals.

Lamp Dimming Control (DPWM)

The DS3988 uses a digital pulse-width modulated (DPWM) signal (22.5Hz to 440Hz) to provide efficient and precise lamp dimming. During the high period of the DPWM cycle, the lamps are driven at the selected lamp frequency (40kHz to 80kHz) as shown in Figure 6. This part of the cycle is called the "burst" period because of the lamp frequency burst that occurs during this time. During the low period of the DPWM cycle, the controller disables the MOSFET gate drivers so the lamps are not driven. This causes the current to stop flowing in the lamps, but the time is short enough to keep the lamps from de-ionizing. Dimming is increased/decreased by adjusting (i.e., modulating) the duty cycle of the DPWM signal.

The DS3988 can generate its own DPWM signal internally (set DPSS = 0 in CR1), which can then be sourced to other DS3988s if required, or the DPWM signal can be supplied from an external source (set DPSS = 1 in CR1).

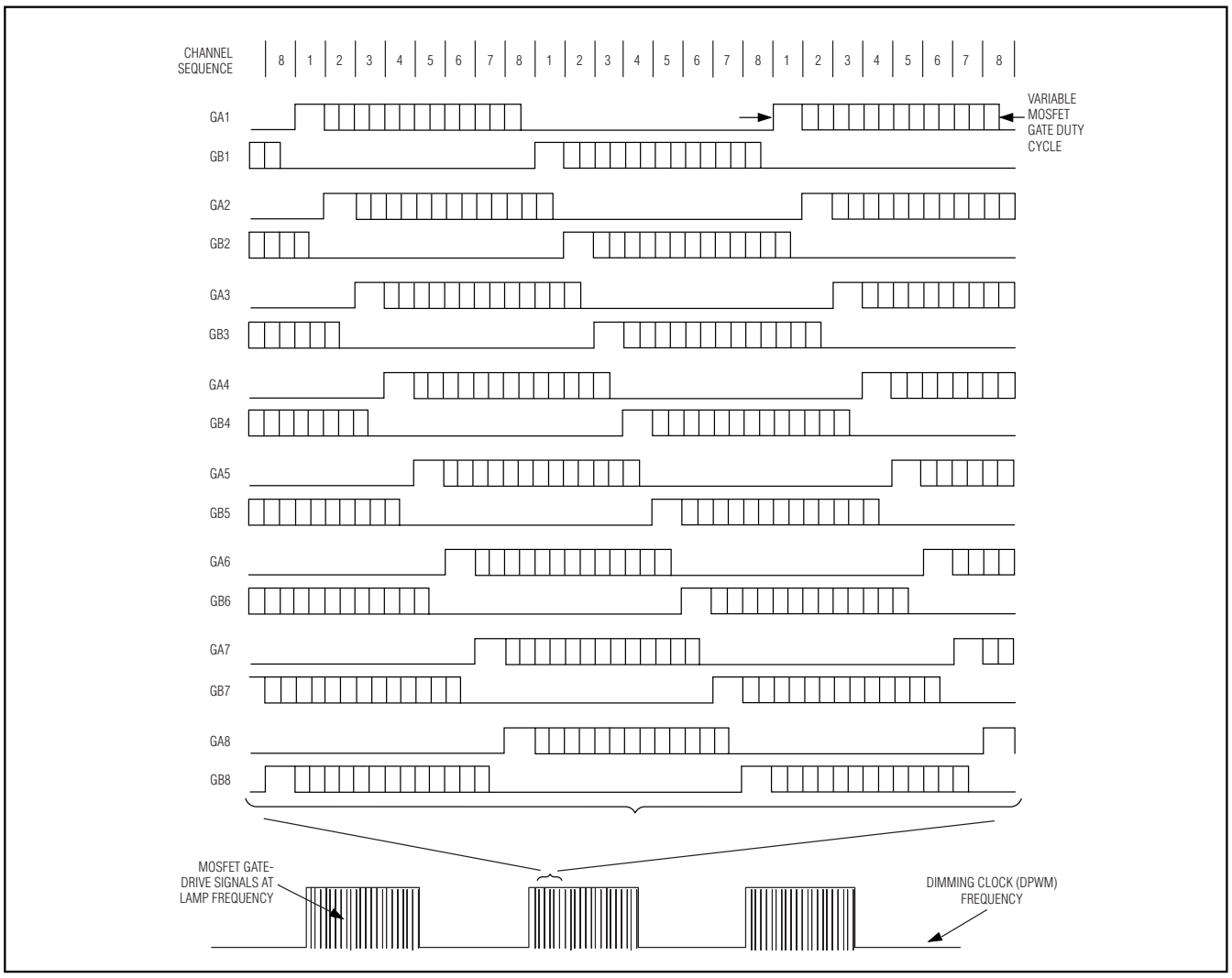

Figure 2. Channel Phasing Detail

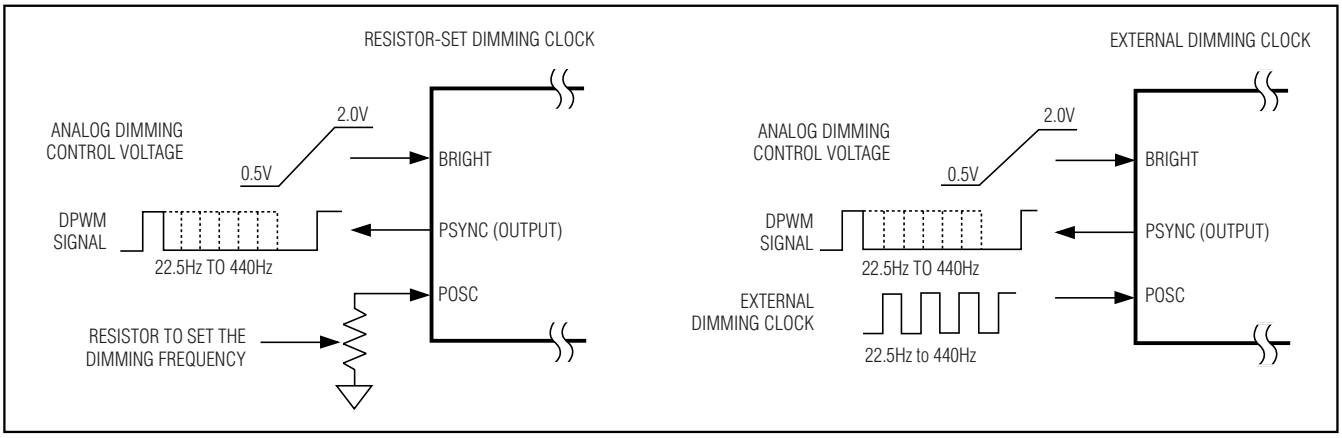

Figure 3. DPWM Source Configuration Options

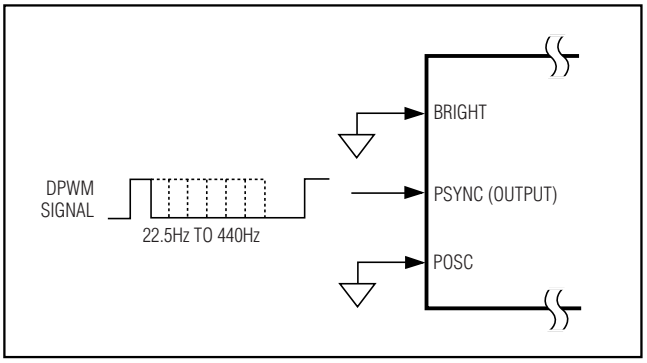

Figure 4. The DPWM Receiver Configuration

To generate the DPWM signal internally, the DS3988 requires a clock (referred to as the dimming clock) to set the DPWM frequency. The user can supply the dimming clock by setting POSCS = 1 in CR1 and applying an external 22.5Hz to 440Hz signal at the POSC pin, or DS3988's clock can be generated by the DS3988's oscillator (set POSCS = 0 in CR1), in which case the frequency is set by an external resistor at the POSC pin. These two dimming clock options are shown in Figure 3. Regardless of whether the dimming clock is generated internally or sourced externally, the POSC1 and POSC2 bits in CR2 must be set to match the desired dimming clock frequency.

When the DPWM signal is generated internally, its duty cycle (and, thus, the lamp brightness) is controlled by a user-applied analog voltage at the BRIGHT input. A BRIGHT voltage less than 0.5V will cause the DS3988 to operate with the minimum burst duty cycle, providing the lowest brightness setting, while any voltage greater than 2.0V will cause a 100% burst duty cycle (i.e., lamps always being driven), which provides the maximum brightness. For voltages between 0.5V and 2V the duty cycle will vary linearly between the minimum and 100%.

The internally generated DPWM signal is available at the PSYNC I/O pin (set RGSO = 0 in CR1) for sourcing to other DS3988s, if any, in the circuit. This allows all DS3988s in the system to be synchronized to the same DPWM signal. The DS3988 that is generating the DPWM signal for other DS3988s in the system is referred to as the DPWM source.

When the DPWM signal is provided by an external source, either from the PSYNC pin of another DS3988 or from some other user-generated source, it is input into the PSYNC I/O pin of the DS3988. In this mode, the BRIGHT and POSC inputs are disabled and should be grounded (see Figure 4). When multiple DS3988s are used in a design, DS3988s configured to use externally generated DPWM signals are referred to as DPWM receivers.

Lamp Frequency Configuration

The DS3988 can generate its own lamp frequency clock internally (set LFSS = 0 in CR1), which can then be sourced to other DS3988s if required, or the lamp clock can be supplied from an external source (set LFSS = 1 in CR1). When the lamp clock is internally generated, the frequency (40kHz to 80kHz) is set by an external resistor at the LOSC. In this case, the DS3988 can act as a lamp frequency source because the lamp clock is output at the LSYNC I/O pin for synchronizing any other DS3988s configured as lamp frequency receivers.

The DS3988 acts as a lamp frequency receiver when the lamp clock is supplied externally. In this case, a 40kHz to 80kHz clock must be supplied at the LSYNC I/O. The external clock can originate from the LSYNC I/O of a DS3988 configured as a lamp frequency source or from some other source.

8-Channel Cold-Cathode Fluorescent Lamp Controller

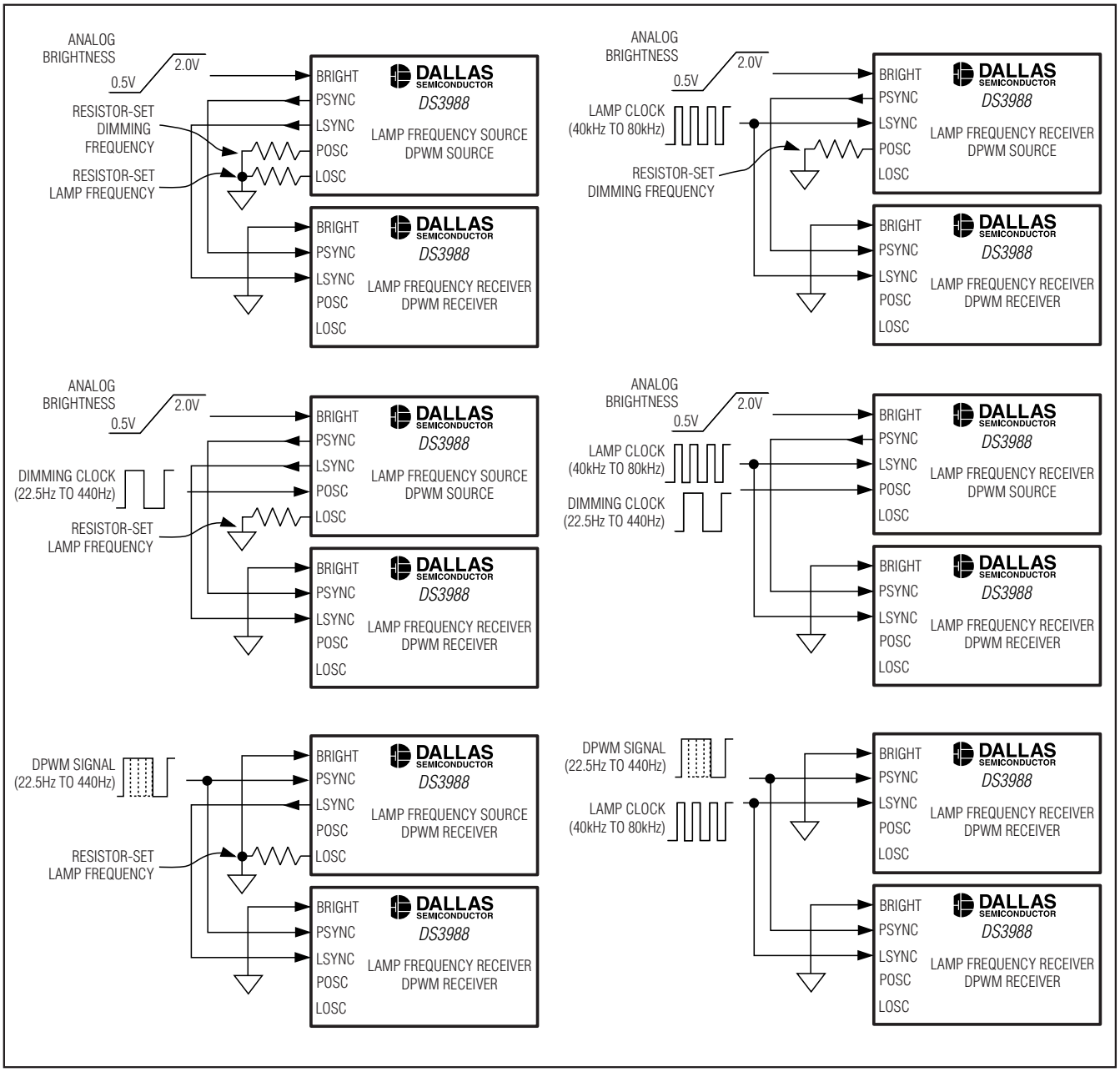

Figure 5. Frequency Configuration Options for Designs Using Multiple DS3988s

Configuring Systems with Multiple DS3988s

The source and receiver options for the lamp frequency clock and DPWM signal allow multiple DS3988s to be synchronized in systems requiring more than 8 lamps. The lamp and dimming clocks can either be generated on board the DS3988 using external resistors to set the frequency, or they can be sourced by the host system to synchronize the DS3988 to other system resources. Figure 5 shows various multiple DS3988 configurations that allow both lamp and/or DPWM synchronization for all DS3988s in the system.

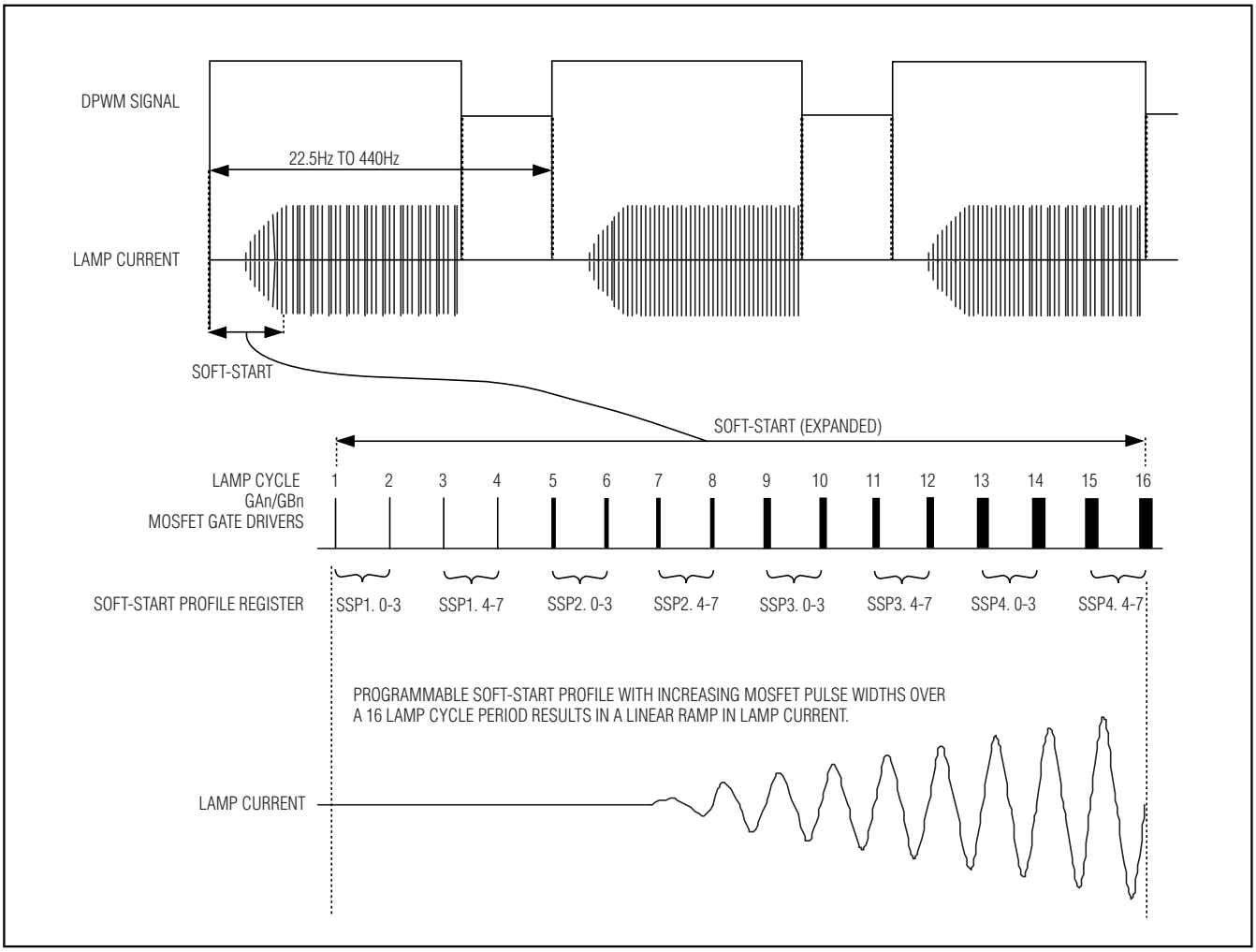

Figure 6. Digital PWM Dimming and Soft-Start

DPWM Soft-Start

At the beginning of each lamp burst, the DS3988 provides a soft-start that slowly increases the MOSFET gate-driver duty cycle (see Figure 6). This minimizes the possibility of audible transformer noise that could result from current surges in the transformer primary. The soft-start length is fixed at 16 lamp cycles, but the soft-start ramp profile is programmable through the four Soft-Start Profile registers (SSP1/2/3/4) and can be adjusted to match the application. There are seven different driver duty cycles to select from to customize the soft-start ramp (see Table 1). The available duty cycles range from 0% to 19% in ~3% increments. In addition, the MOSFET duty cycle from the last lamp cycle of the previous burst can be used as part of the soft-start ramp by using the Most Recent Value duty-cycle code. Each programmed MOSFET gate duty cycle repeats twice to make up the 16 soft-start lamp cycles.

8-Channel Cold-Cathode Fluorescent Lamp Controller

Setting the Lamp and Dimming Clock (DPWM) Frequencies Using External Resistors

Both the lamp and dimming clock frequencies can be set using external resistors. The resistance required for either frequency can be determined using the following formula:

$$R_{OSC} = \frac{K}{f_{OSC}}$$

where K = 1600kΩ•kHz for lamp frequency calculations. When calculating the resistor value for the dimming clock frequency, K will be one of four values as determined by the desired frequency and the POSCR0 and POSCR1 bit settings as shown in the Control Register 2 (CR2) table 4 in the *Detailed Register Descriptions* section.

Example: Selecting the resistor values to configure a DS3988 to have a 50kHz lamp frequency and a 160Hz dimming clock frequency:

For this configuration, POSCR0 and POSCR1 must be programmed to 1 and 0, respectively, to select 90Hz to 220Hz as the dimming clock frequency range. This sets K for the dimming clock resistor (R_{POSC}) calculation to 4kΩ•kHz. For the lamp frequency resistor (R_{LOSC}) calculation, K = 1600kΩ•kHz, which allows the lamp frequency K value regardless of the frequency. The formula above can now be used to calculate the resistor values for R_{LOSC} and R_{POSC} as follows:

$$R_{LOSC} = \frac{1600k\Omega \bullet kHz}{50kHz} = 32k\Omega,$$

$$R_{POSC} = \frac{4k\Omega \bullet kHz}{0.160kHz} = 25.0k\Omega$$

Supply Monitoring

The DS3988 monitors both the transformer's DC supply and its own V_{CC} supply to ensure that both voltage levels are adequate for proper operation.

The inverter's transformer supply (V_{INV}) is monitored using an external resistor-divider that is the input into a comparator (see Figure 7) with a 2V threshold. Using the equation below to determine the resistor values, the supply voltage monitor (SVM) trip point (V_{TRIP}) can be customized to shut off the inverter when the transformer's input voltage drops below any specified value. Operating with the transformer's supply at too low of a level can prevent the inverter from reaching the strike voltage and could potentially cause numerous other problems. Proper use of the SVM can prevent these problems. If desired, the SVM can be disabled by connecting the SVM pin to V_{CC}.

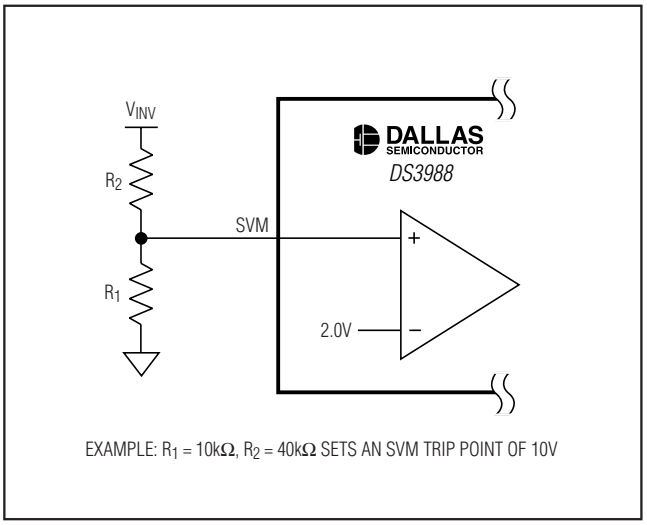

Figure 7. Setting the SVM Threshold Voltage

$$V_{TRIP} = 2.0\left(\frac{R_1 + R_2}{R_1}\right)$$

The V_{CC} monitor is used as a 5V supply undervoltage lockout (UVLO) that prevents operation when the DS3988 does not have adequate voltage for its analog circuitry to operate or to drive the external MOSFETs. The V_{CC} monitor features hysteresis to prevent V_{CC} noise from causing spurious operation when V_{CC} is near the trip point. This monitor cannot be disabled by any means.

Fault Monitoring

The DS3988 provides extensive fault monitoring for each channel. It can detect open-lamp, lamp overcurrent, failure to strike, and overvoltage conditions. The DS3988 can be configured to disable all channels if one or more channels enter a Fault State, or it can be configured to disable only the channel where the fault occurred. Once a Fault State has been entered, the $\overline{FAULT}$ output is asserted and the channel(s) remain disabled until either the DS3988 is power-cycled or the inverter's DC supply is power-cycled. The DS3988 can also be configured to automatically attempt to clear a detected fault (except lamp overcurrent) by restriking the lamp, as explained in Step 4. Configuration bits for the fault monitoring options are located in CR1 and CR2.

Figure 8 shows a flowchart of how the DS3988 controls and monitors each lamp. The steps are as follows:

1) Supply Check—The lamps will not turn on unless the DS3988 supply voltage is ≥4.5V and the voltage at the supply voltage monitor (SVM) input is ≥2V.
2) Strike Lamp—When both the DS3988 and the DC inverter supplies are above the minimum values, the DS3988 will attempt to strike each enabled lamp for 768 lamp cycles [1 lamp cycle (seconds) = 1/lamp frequency (Hertz)]. If the lamp doesn't strike during that time, the DS3988 will go into a fault-handling stage (step 4). The DS3988 detects that the lamp has struck by measuring the current flow through the lamp. Also, if an overvoltage event is detected during the strike attempt, the DS3988 will disable the MOSFET gate drivers and go to the fault-handling stage. If a lamp overcurrent is detected, the DS3988 will immediately enter a Fault State.
3) Run Lamp—Once the lamp is struck, the DS3988 adjusts the MOSFET gate duty cycle to optimize the lamp current. The lamp current sampling rate is user-selectable with the LSR0 and LSR1 bits in CR2. If the lamp current ever drops below the Open Lamp reference point for 256 lamp cycles, the lamp is considered extinguished. If this occurs or if an overvoltage event is detected while the lamp is running, the DS3988 will disable the MOSFET gate drivers and go to the fault-handling stage. If a lamp overcurrent is detected, the DS3988 will immediately enter a Fault State.
4) Fault Handling—The DS3988 can be configured to automatically restrike the lamp(s) in an attempt to clear the detected fault condition (except for lamp overcurrent faults). The automatic retry will make up to 15 re-strike attempts before entering a Fault State. Between each of the 15 retries, the controller will wait 1024 lamp cycles. If after any of the retries the fault has cleared, normal operation will resume. In the case of a lamp overcurrent fault, the DS3988 will skip the automatic retry even if it is enabled and will immediately enter a Fault State.

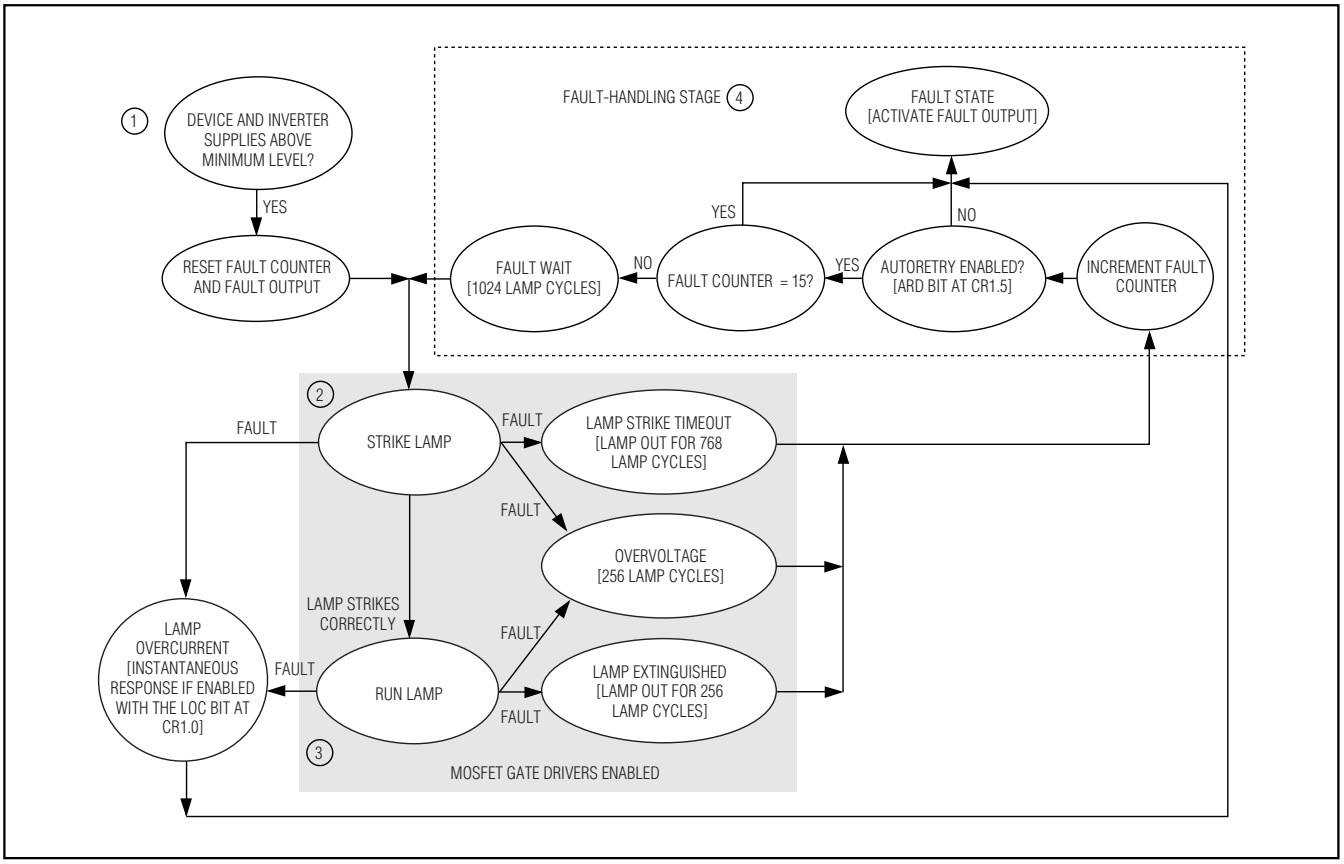

Figure 8. Fault-Handling Flow Chart

8-Channel Cold-Cathode Fluorescent Lamp Controller

Detailed Register Descriptions

The DS3988's Register Map is shown in Table 1. Detailed register and bit descriptions follow in the subsequent tables.

Soft-Start Profile (SSPx) Registers—Each of the four soft-start profile registers (SSP1–4) contains two 4-bit codes that determine the MOSFET's duty cycle (MDC) for two clock cycles each (see Figure 6) at the beginning of each DPWM burst. Table 2 shows the duty cycles that correspond to each code. Selecting the Most Recent Value instructs the DS3988 to use the MOSFET duty cycle that was used for the last lamp cycle of the previous burst.

Table 2. MOSFET Duty Cycle (MDC) Codes for Soft-Start Settings

MDC CODE (BINARY)*	MOSFET DUTY CYCLE
X000	Fixed at 0%
X001	Fixed at 3%
X010	Fixed at 6%
X011	Fixed at 9%
X100	Fixed at 13%
X101	Fixed at 16%
X110	Fixed at 19%
X111	Most Recent Value

**The most significant bit of each MDC code is ignored.*

Table 1. Register Map

BYTE ADDRESS	BYTE NAME	FACTORY DEFAULT*	BIT 7	BIT 6	BIT 5	BIT 4	BIT 3	BIT 2	BIT 1	BIT 0
F0h	SSP1	21h	MDC code for soft-start lamp cycles 3, 4				MDC code for soft-start lamp cycles 1, 2			
F1h	SSP2	43h	MDC code for soft-start lamp cycles 7, 8				MDC code for soft-start lamp cycles 5, 6			
F2h	SSP3	65h	MDC code for soft-start lamp cycles 11, 12				MDC code for soft-start lamp cycles 9, 10			
F3h	SSP4	77h	MDC code for soft-start lamp cycles 15, 16				MDC code for soft-start lamp cycles 13, 14			
F4h	CR1	00h	DPD	FRS	ARD	RGSO	DPSS	LFSS	POSCS	LOC
F5h	CR2	08h	LD2	LD1	LD0	LSR1	LSR0	POSCR1	POSCR0	UMWP
F6h	CR3	00h	Do not modify. If it has been modified, restore to all zeros.							
F7h	Reserved	—	—	—	—	—	—	—	—	—
F8-FFh	User Memory	00h	EE	EE	EE	EE	EE	EE	EE	EE

**All the configuration settings are saved in nonvolatile (EEPROM) memory.*

Table 3. Control Register 1 (CR1)

BIT	NAME	FUNCTION
0	LOC	Lamp Overcurrent. 0 = Lamp overcurrent detection disabled. 1 = Lamp overcurrent detection enabled. **Note:** Gate duty cycle changes during soft-start larger than 5% can cause false LOC fault.
1	POSCS	POSC Select. See POSCR0 and POSCR1 bits in Control Register 2 to select the oscillator range. 0 = Connect POSC to ground with a resistor to set the dimming frequency. 1 = Connect POSC to an external 22.5Hz to 440Hz dimming clock to set the dimming frequency.
2	LFSS	Lamp Frequency Source Select. 0 = Lamp frequency source mode. The lamp frequency is generated internally and sourced at the LSYNC output for use by lamp frequency receivers. 1 = Lamp frequency receiver mode. The lamp frequency must be provided at the LSYNC input.
3	DPSS	DPWM Signal Source Select. 0 = DPWM source mode. DPWM signal is generated internally, and can be output at PSYNC pin (see RGSO bit). 1 = DPWM receiver mode. DPWM signal is generated externally and supplied at the PSYNC input.
4	RGSO	Ramp Generator Source Option. 0 = Sources DPWM at the PSYNC output. 1 = Sources the internal ramp generator at PSYNC output.
5	ARD	Autoretry Disable. 0 = Autoretry function enabled. 1 = Autoretry function disabled.
6	FRS	Fault Response Select. 0 = Disable only the malfunctioning channel. 1 = Disable all channels upon fault detection at any channel.
7	DPD	DPWM Disable. 0 = DPWM function enabled. 1 = DPWM function disabled. DPWM set to 100% duty cycle.

8-Channel Cold-Cathode Fluorescent Lamp Controller

Table 4. Control Register 2 (CR2)

BIT	NAME	FUNCTION
0	UMWP	User Memory Write Protect. 0 = User Memory Write Access Blocked 1 = User Memory Write Access Permitted

1	POSCR0	DPWM Oscillator Range Select. When using an external source for the dimming clock, these bits must be set to match the external oscillator's frequency. When using a resistor to set the dimming frequency, these bits plus the external resistor control the frequency.			
2	POSCR1	**POSCR1**	**POSCR0**	**DIMMING CLOCK (DPWM) FREQUENCY RANGE (Hz)**	**K (kΩ • kHz)**
		0	0	22.5 to 55.0	1
		0	1	45 to 110	2
		1	0	90 to 220	4
		1	1	180 to 440	8

3	LSR0	Lamp Sample Rate Select. Determines the feedback sample rate of the LCM inputs			
		LSR1	**LSR0**	**SELECTED LAMP SAMPLE RATE**	**EXAMPLE SAMPLE RATE IF LAMP FREQUENCY IS 50kHZ**
		0	0	4 Lamp Frequency Cycles	12500Hz
4	LSR1	0	1	8 Lamp Frequency Cycles	6250Hz
		1	0	16 Lamp Frequency Cycles	3125Hz
		1	1	32 Lamp Frequency Cycles	1563Hz

5	LD0	Lamp Disable. Used to disable channels if all 8 are not required for an application.				
		LD2	**LD1**	**LD0**	**CHANNELS DISABLED**	**NUMBER OF ACTIVE LAMP CHANNELS**
		0	0	0	All Channels Enabled	8
		0	0	1	8	7
6	LD1	0	1	0	4/8	6
		0	1	1	2/4/8	5
		1	0	0	2/4/6/8	4
7	LD2	1	0	1	2/4/6/7/8	3
		1	1	0	2/3/4/6/7/8	2
		1	1	1	2/3/4/5/6/7/8	1

I²C Definitions

The following terminology is commonly used to describe I²C data transfers.

Master Device: The master device controls the slave devices on the bus. The master device generates SCL clock pulses, start, and stop conditions.

Slave Devices: Slave devices send and receive data at the master's request.

Bus Idle or Not Busy: Time between stop and start conditions when both SDA and SCL are inactive and in their logic-high states.

Start Condition: A start condition is generated by the master to initiate a new data transfer with a slave. Transitioning SDA from high to low while SCL remains high generates a start condition. See the timing diagram for applicable timing.

Stop Condition: A stop condition is generated by the master to end a data transfer with a slave. Transitioning SDA from low to high while SCL remains high generates a stop condition. See the timing diagram for applicable timing.

Repeated Start Condition: The master can use a repeated start condition at the end of one data transfer to indicate that it will immediately initiate a new data transfer following the current one. Repeated starts are commonly used during read operations to identify a specific memory address to begin a data transfer. A repeated start condition is issued identically to a normal start condition. See the timing diagram for applicable timing.

Bit Write: Transitions of SDA must occur during the low state of SCL. The data on SDA must remain valid and unchanged during the entire high pulse of SCL plus the setup and hold time requirements (see Figure 9). Data is shifted into the device during the rising edge of the SCL.

Bit Read: At the end of a write operation, the master must release the SDA bus line for the proper amount of setup time (see Figure 9) before the next rising edge of SCL during a bit read. The device shifts out each bit of data on SDA at the falling edge of the previous SCL pulse and the data bit is valid at the rising edge of the current SCL pulse. Remember that the master generates all SCL clock pulses including when it is reading bits from the slave.

Acknowledgement (ACK and NACK): An acknowledgement (ACK) or not acknowledge (NACK) is always the 9th bit transmitted during a byte transfer. The device receiving data (the master during a read or the slave during a write operation) performs an ACK by transmitting a zero during the 9th bit. A device performs a NACK by transmitting a one during the 9th bit. Timing (Figure 9) for the ACK and NACK is identical to all other bit writes. An ACK is the acknowledgment that the device is properly receiving data. A NACK is used to terminate a read sequence or as an indication that the device is not receiving data.

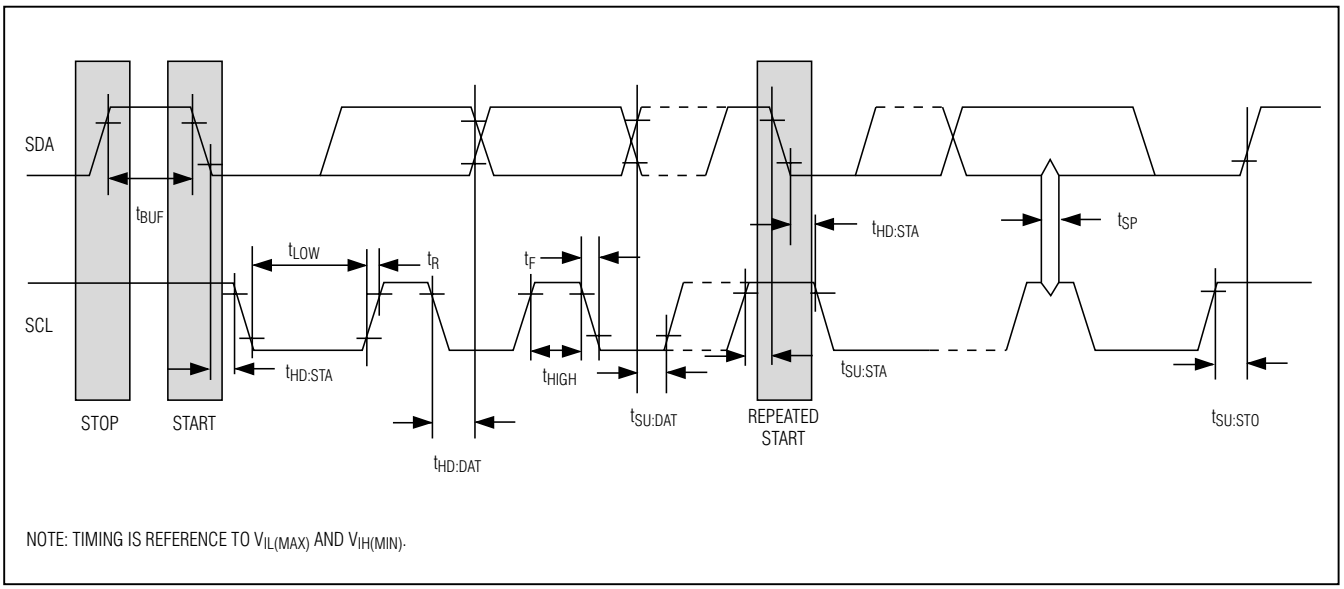

Figure 9. I²C Timing Diagram

8-Channel Cold-Cathode Fluorescent Lamp Controller

Byte Write: A byte write consists of 8 bits of information transferred from the master to the slave (most significant bit first) plus a 1-bit acknowledgement from the slave to the master. The 8 bits transmitted by the master are done according to the bit-write definition and the acknowledgement is read using the bit-read definition.

Byte Read: A byte read is an 8-bit information transfer from the slave to the master plus a 1-bit ACK or NACK from the master to the slave. The 8 bits of information that are transferred (most significant bit first) from the slave to the master are read by the master using the bit read definition, and the master transmits an ACK using the bit write definition to receive additional data bytes. The master must NACK the last byte read to terminate communication so the slave will return control of SDA to the master.

Slave Address Byte: Each slave on the I²C bus responds to a slave addressing byte sent immediately following a start condition. The slave address byte (Figure 10) contains the slave address in the most significant seven bits and the R/$\overline{W}$ bit in the least significant bit.

The DS3988's slave address is 101000A_0 (binary), where A_0 is the value of the address pin (A_0). The address pin allows the device to respond to one of two possible slave addresses. By writing the correct slave address with R/$\overline{W}$ = 0, the master writes data to the slave. If R/$\overline{W}$ = 1, the master reads data from the slave. If an incorrect slave address is written, the DS3988 will assume the master is communicating with another I²C device and ignore the communications until the next start condition is sent.

Memory Address: During an I²C write operation, the master must transmit a memory address to identify the memory location where the slave is to store the data. The memory address is always the second byte transmitted during a write operation following the slave address byte.

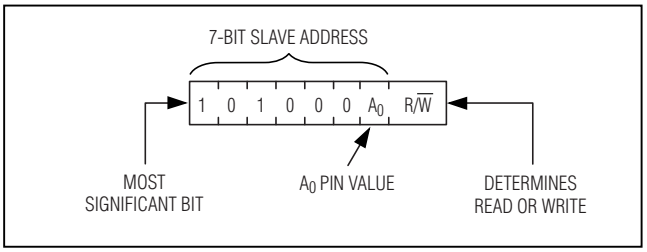

Figure 10. DS3988's Slave Address Byte

I²C Communication

Writing a Data Byte to a Slave: The master must generate a start condition, write the slave address byte (R/$\overline{W}$ = 0), write the memory address, write the byte of data, and generate a stop condition. Remember the master must read the slave's acknowledgement during all byte write operations. See Figure 11 for more detail.

Acknowledge Polling: Any time EEPROM is written, the DS3988 requires the EEPROM write time (t_W) after the stop condition to write the contents to EEPROM. During the EEPROM write time, the DS3988 will not acknowledge its slave address because it is busy. It is possible to take advantage of that phenomenon by repeatedly addressing the DS3988, which allows the next byte of data to be written as soon as the DS3988 is ready to receive the data. The alternative to acknowledge polling is to wait for a maximum period of t_W to elapse before attempting to write again to the DS3988.

EEPROM Write Cycles: The number of times the DS3988's EEPROM can be written before it fails is specified in the *Nonvolatile Memory Characteristics* table. This specification is shown at the worst-case write temperature. The DS3988 is typically capable of handling many additional write cycles when the writes are performed at room temperature.

Reading a Data Byte from a Slave: To read a single byte from the slave the master generates a start condition, writes the slave address byte with R/$\overline{W}$ = 0, writes the memory address, generates a repeated start condition, writes the slave address with R/$\overline{W}$ = 1, reads the data byte with a NACK to indicate the end of the transfer, and generates a stop condition. See Figure 11 for more detail.

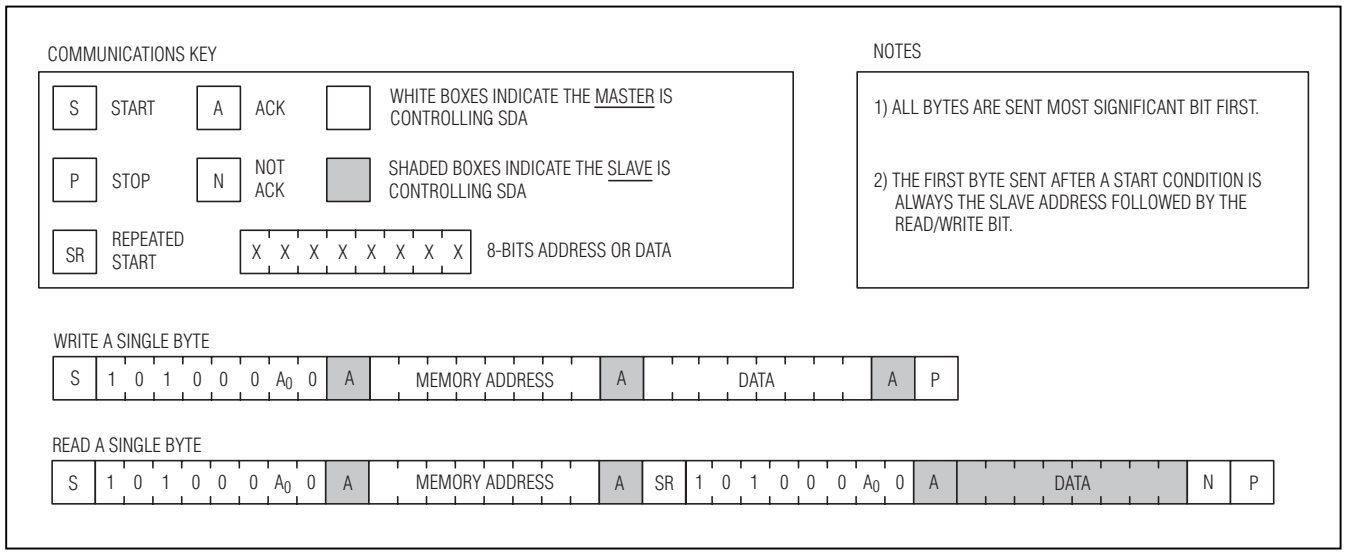

Figure 11. I²C Communications Examples

Applications Information

Addressing Multiple DS3988s On a Common I²C Bus

Each DS3988 responds to one of two possible slave addresses based on the state of the address input (A_0). For information about device addressing see the *I²C Communications* section.

Power-Supply Decoupling

To achieve best results, it is recommended that each V_{CC} pin is decoupled with a 0.01µF or a 0.1µF capacitor to GND. Use high-quality, ceramic, surface-mount capacitors, and mount the capacitors as close as possible to the V_{CC} and GND pins to minimize trace inductance.

Setting the RMS Lamp Current

Resistor R8 in the typical operating circuit (Figure 12) sets the lamp current. R8 = 140Ω corresponds to a $5mA_{RMS}$ lamp current as long as the current waveform is approximately sinusoidal. The formula to determine the resistor value for a given sinusoidal lamp current is:

$$R8 = \frac{1}{\sqrt{2} \times I_{LAMP(RMS)}}$$

Component Selection

External component selection has a large impact on the overall system performance and cost. The two most important external components are the transformers and n-channel MOSFETs.

The transformer should be able to operate in the 40kHz to 80kHz frequency range of the DS3988, and the turns ratio should be selected so the MOSFET drivers run at 28% to 35% duty cycle during steady state operation. The transformer must be able to withstand the high open-circuit voltage that will be used to strike the lamp. Additionally, its primary/secondary resistance and inductance characteristics must be considered because they contribute significantly to determining the efficiency and transient response of the system. Table 5 shows a transformer specification that has been utilized for a 12V inverter supply, 438mm x 2.2mm lamp design.

The n-channel MOSFET must have a threshold voltage that is low enough to work with logic-level signals, a low on-resistance to maximize efficiency and limit the n-channel MOSFET's power dissipation, and a breakdown voltage high enough to handle the transient. The breakdown voltage should be a minimum of 3x the inverter voltage supply. Additionally, the total gate charge must be less than Q_G, which is specified in the *Recommended DC Operating Conditions* table. These specifications are easily met by many of the dual n-channel MOSFETs now available in SO-8 packages.

Table 6 lists suggested values for the external resistors and capacitors used in the typical operating circuit.

8-Channel Cold-Cathode Fluorescent Lamp Controller

Table 5. Transformer Specifications

PARAMETER	CONDITIONS	MIN	TYP	MAX	UNITS
Turns Ratio (Secondary/Primary)	(Notes 11, 12, 13)		40		
Frequency		40		80	kHz
Output Power				6	W
Output Current			5	8	mA
Primary DCR	Center tap to one end		200		mΩ
Secondary DCR			500		Ω
Primary Leakage			12		µH
Secondary Leakage			185		mH
Primary Inductance			70		µH
Secondary Inductance			500		mH
Center Tap Voltage		10.8	12	13.2	V
Secondary Output Voltage	100ms minimum	2000			V_{RMS}
	Continuous	1000			

Note 11: Primary should be Bifilar wound with center tap connection.
Note 12: Turns ratio is defined as secondary winding divided by the sum of both primary windings.
Note 13: 40:1 is the nominal turns ratio for driving a 438mm x 2.2mm lamp with a 12V supply. Refer to AN3375 for more information.

Table 6. Resistor and Capacitor Selection Guide

DESIGNATOR	QTY	VALUE	25°C TOLERANCE (%)	TEMPERATURE COEFFICIENT	NOTES
R1	1	10kΩ	1	—	—
R2	1	12.5kΩ to 105kΩ	1	—	See the *Setting the SVM Threshold Voltage* section.
R3	1	20kΩ to 40kΩ	1	≤153ppm/°C	2% or less total tolerance. See the *Lamp Frequency Configuration* section to determine value.
R4	1	18kΩ to 45kΩ	1	≤153ppm/°C	2% or less total tolerance. See the *Lamp Frequency Configuration* section to determine value.
R5	1	4.7kΩ	5	Any grade	—
R6	1	4.7kΩ	5	Any grade	—
R7	1	4.7kΩ	5	Any grade	—
R8	1/Ch	140Ω	1	—	See the *Setting the RMS Lamp Current* section.
C1	1/Ch	100nF	10	X7R	Capacitor value will also affect LCM Bias voltage during power-up. A larger capacitor may cause a longer time for V_{DCB} to reach its normal operating point.
C2	1/Ch	10pF	5	±1000ppm/°C	2kV to 4kV breakdown voltage required.
C3	1/Ch	27nF	5	X7R	Capacitor value will also affect LCM Bias voltage during power-up. A larger capacitor may cause a longer time for V_{DCB} to reach its normal operating point.
C4	1/Ch	33µF	20	Any grade	—
C5	2/DS3988	0.1µF	10	X7R	Place close to V_{CC} and GND on DS3988.

Typical Operating Circuit

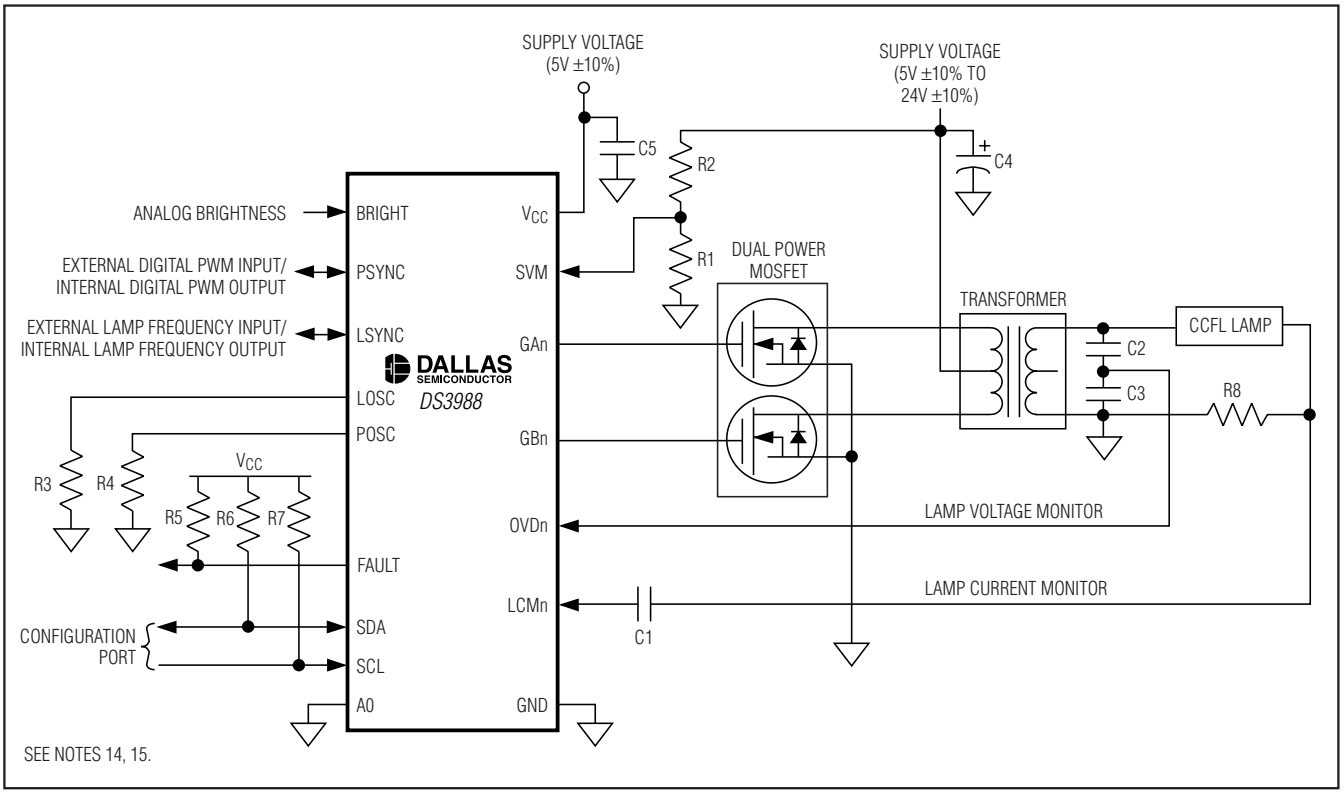

Figure 12. Typical Operating Circuit

Note 14: Only one channel shown to simplify drawing.
Note 15: See the *Component Selection* section for recommended external components.

Chip Information

TRANSISTOR COUNT: 70,200

SUBSTRATE CONNECTED TO: Ground

Package Information

For the latest package outline information, go to **www.maxim-ic.com/DallasPackInfo**.

Maxim cannot assume responsibility for use of any circuitry other than circuitry entirely embodied in a Maxim product. No circuit patent licenses are implied. Maxim reserves the right to change the circuitry and specifications without notice at any time.

© 2005 Maxim Integrated Products Printed USA MAXIM is a registered trademark of Maxim Integrated Products, Inc.

DALLAS SEMICONDUCTOR is a registered trademark of Dallas Semiconductor Corporation.