DS2790
Programmable 1-Cell Li-Ion Fuel Gauge and Protector

www.maxim-ic.com

GENERAL DESCRIPTION

The DS2790 provides a complete fuel gauging and protection solution for single cell Li-Ion battery packs. A low-power 16-bit MAXQ20 microcontroller with generous program and data memory, combined with an accurate measurement system for battery current, voltage, and temperature provide the ideal platform for customized fuelgauge algorithms. The 2-wire interface provides an I^2C- or SMBus™-compatible communication path between the host and battery pack, while providing password protected programming of the fuel-gauging firmware. EEPROM data memory supports nonvolatile in-pack storage of charge parameters, cell characteristics, usage history, and manufacturing/lot tracking data.

An autonomous state machine performs voltage, current, and temperature related protection functions. This capability increases reliability of the whole system by eliminating dependence on the CPU for protection. The DS2790 supports Li-Ion batteries in a wide range of applications.

TYPICAL OPERATING CIRCUIT

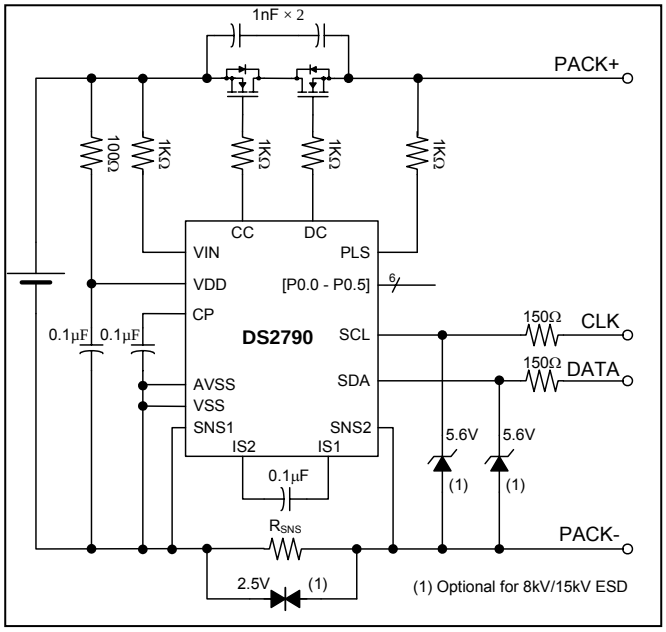

PIN CONFIGURATION

See last page for TSSOP and TDFN packages.

FEATURES

- **Accurate Current Measurement for Coulomb Counting (Current Accumulation)**
  1.5% ±7.8µV over ± 64mV Input Range
  1.5% ±520µA over ±4.2A Range Using an External 15mΩ Series Resistor
- **High Resolution Current Reporting**
  12-bit + Sign Average Every 88ms
  15-bit + Sign Average Every 2.8s
- **Voltage Measurement**
  10-bit Average
- **Temperature Measurement**
  10-bit Using On-Chip Sensor
- **16-bit MAXQ20 Low Power Microcontroller**
  Efficient C-Language Programming
  8k Words Total Program Memory
  – 4k Words EEPROM Program Memory
  – 4k Words ROM Program Memory
  64 Words Data EEPROM
  256 Words Data RAM
- **State Machine-Driven Protection**
  Protection Independent of CPU Operation
  Programmable Levels for:
  – Overvoltage/Undervoltage
  – Overcurrent
  – Temperature Limits
- **Lithium-Ion Protector Drives Highside N-FETs**
- **Industry Standard 400kHz 2-Wire interface**
  Password Protected Programming
- **Operates as Low as 2.5V Input on V_{DD}**
- **SHA-1 Hash Algorithm in ROM**
- **Internal Oscillator—No Crystal Required**
- **Low Power Consumption**
  3.3mA CPU Mode (1MHz), 280µA Analog Mode, 4.5µA Sleep Mode

ORDERING INFORMATION

PART	TEMP RANGE	PIN-PACKAGE
DS2790E+	-20ºC to +70ºC	TSSOP-28
DS2790G+	-20ºC to +70ºC	TDFN-28

Contact factory concerning Mask ROM devices.
+ Denotes lead-free package.
MAXQ is a registered trademark of Maxim Integrated Products, Inc.
SMBus is a trademark of Intel Corp.

Note: *Some revisions of this device may incorporate deviations from published specifications known as errata. Multiple revisions of any device may be simultaneously available through various sales channels. For information about device errata, click here: www.maxim-ic.com/errata.*

ABSOLUTE MAXIMUM RATINGS

PLS to V_{SS} ..... -0.3V to +18V
CP to V_{SS} ..... -0.3V to +12V
DC to V_{SS} ..... -0.3V to CP+0.3V
CC to V_{SS} ..... V_{DD} -0.3V to CP+0.3V
P0.4, P0.5 to V_{SS} ..... -0.3V to V_{DD} +0.3V
AVSS to V_{SS} ..... -0.3V to +0.3V
All other pins to V_{SS} ..... -0.3V to +6V
SCL, SDA, P0.0–P0.5 Continous Sink Current ..... 20mA Each, 50mA Total
P0.4, P0.5 Continous Source Current ..... 20mA Each, 50mA Total
CC, DC Continuous Source/Sink Current 5mA
Operating Temperature Range ..... -40ºC to +85ºC
Storage Temperature Range ..... -55ºC to +125ºC
Soldering Temperature ..... See IPC/JEDEC J-STD-020A Specification

Stresses beyond those listed under "Absolute Maximum Ratings" may cause permanent damage to the device. These are stress ratings only, and functional operation of the device at these or any other conditions beyone those indicated in the operational sections of the specifications is not implied. Exposure to the absolute maximum rating conditions for extended periods may affect device.

DC ELECTRICAL SPECIFICATIONS

(V_{DD} = 2.5V to 5.5V, T_A = -20°C to +70°C unless otherwise noted. Typical values are at V_{DD} = 3.7, T_A = +25°C)

PARAMETER	SYMBOL	CONDITIONS	MIN	TYP	MAX	UNITS
Supply Current	I_{CPU}	CPU Mode (Note 1, 2)		1.5	3.3	mA
	I_{ANALOG}	ANALOG Mode (Note 2)		160	280	µA
	I_{SLEEP}	SLEEP Mode, (Note 2)			12.0	µA
		SLEEP Mode, (Note 2) V_{DD} = 4.2V, $T_A \le 50°C$		2.5	4.5	
		SLEEP Mode, (Note 2) V_{DD} = 2.5V, $T_A \le 50°C$		1.7	3.5	
Brownout Voltage	V_{BO}	(Note 3)	2.0		2.4	V
Power-On Reset Voltage	V_{POR}	(Note 3)		1.5		V
Internal System Clock	f_{OSCI}			1.0		MHz
System Clock Error	$f_{ERR:OSCI}$				±20	%
System Clock Startup	$t_{SU:OSCI}$	OSCA Active		1.0		µs
		From SLEEP, OSCA Inactive		700		
PLS Voltage Range		(Note 3)	-0.3		15	V
P0.4–P0.5 Voltage Range		(Note 3)	-0.3		V_{DD} + 0.3	V
P0.0–P0.3, SCL, SDA Voltage Range		(Note 3)	-0.3		+5.5	V
SCL, SDA, Input Logic High	V_{IH1}	(Note 3)	1.5			V
SCL, SDA, Input Logic Low	V_{IL1}	(Note 3)			0.6	V
P0.0 - P0.5, Input Logic High	V_{IH2}	(Note 3)	0.7 × V_{DD}			V
P0.0 - P0.5, Input Logic Low	V_{IL2}	(Note 3)			0.3 × V_{DD}	V
SCL, SDA, P0.0–P0.5 Output Logic Low:	V_{OL1}	I_{OL} = 4mA, (Note 3)			0.4	V
P0.4–P0.5 Output Logic High:	V_{OH1}	I_{OH} = -4mA, PPU[5:4] set, (Note 3)	V_{DD} – 0.5			V
SCL, SDA Pulldown Current	I_{PD1}	$V_{PIN} = V_{IL1}$, PPU[7:6] clear	0.3	1.2	3.0	µA
SCL, SDA Pullup Current	I_{PU1}	$V_{PIN} = V_{IH1}$, PPU[7:6] set	0.3	1.2	3.0	µA
P0.0–P0.3 Pullup Current	I_{PU2}	$V_{PIN} = V_{IH2}$, PPU[3:0] set	0.15	4	22	µA

PARAMETER	SYMBOL	CONDITIONS	MIN	TYP	MAX	UNITS
P0.0–P0.5 Pulse Rejection	t_{PR}	Rising and Falling Edges		100		ns
Current Measurement Input Range (Full Scale)	$V_{IS1}–V_{IS2}$		-64		+64	mV
Current Measurement Resolution	I_{LSB}			15.625		$\mu V/R_{SNS}$
Current Measurement Offset Error	I_{OERR}		-7.8		+7.8	$\mu V/R_{SNS}$
Current Measurement Gain Error	I_{GERR}		-0.8		+0.8	% Full Scale
Accumulated Current Offset	q_{CA}	OBEN = 1	-188		0	µVh/day
		OBEN = 1, RSNS = 0.015Ω	-12.6		0	mAh/day
Temperature Measurement Resolution	T_{LSB}			0.125		°C
Temperature Measurement Error	T_{ERR}		-3		+3	°C
Voltage Full Scale	V_{FS}	(Note 4)	0		4.992	V
Voltage Measurement Resolution	V_{LSB}			4.88		mV
Voltage Measurement Error	V_{ERR}		-20		+20	mV
VIN Input Resistance	R_{IN}		15			MΩ
Current Measurement Sample Frequency	f_{SAMP}			1456		Hz
Analog Timebase Frequency	f_{OSCA}			70		KHz
Analog Timebase Error	$f_{ERR:OSCA}$	$V_{DD} \le 4.5V$, $T_A = 25°C$	-0.7		+0.7	%
			-2		+2	
Filter Resistors IS1 to SNS1, IS2 to SNS2	R_{KS}			10		kΩ
EEPROM Copy Time	t_{EEC}	$V_{DD} \ge 2.8V$		10	15	ms
EEPROM Copy Endurance Data EEPROM	N_{EECD}	$V_{DD} \ge 2.8V$, $T_A = 50°C$	50,000			cycles
EEPROM Copy Endurance Program EEPROM	N_{EECP}	$V_{DD} \ge 2.8V$, $T_A = 50°C$	1000			cycles

ELECTRICAL CHARACTERISTICS: PROTECTION CIRCUITRY

($2.5V \le V_{DD} \le 5.5V$, T_A = 0°C to +50°C.)

PARAMETER	SYMBOL	CONDITIONS	MIN	TYP	MAX	UNITS
Output Low: CC	V_{OLCC}	I_{OL} = 0.1mA, (Note 3)			V_{DD} + 0.1	V
Output Low: DC	V_{OLDC}	I_{OL} = 0.1mA, (Note 3)			0.1	V
Output High: CC	V_{OHCC}	I_{OH} = -0.1mA, (Note 3)	V_{OCP} - 0.25			V
Output High: DC	V_{OHDC}	I_{OH} = -0.1mA, (Note 3)	V_{OCP} - 0.25			V
Output Resistance: CC, DC	R_O	V_{OCP} = 9V, $V_{PIN} = V_{SS}$			2.0	kΩ
Output Voltage: CP	V_{OCP}	$I_{CC} + I_{DC} \le 0.9\mu A$, (Note 3)	8.5	9.0	9.5	V
Overvoltage Detect	V_{OV}	OV = 01010b, (Note 3)	4.330	4.350	4.370	V
Charge Enable	V_{CE}	OV = 01010b, (Note 3)	4.230	4.250	4.270	V

PARAMETER	SYMBOL	CONDITIONS	MIN	TYP	MAX	UNITS
Undervoltage Detect	V_{UV}	UVF = 10111b, (Note 3)	2.430	2.450	2.470	V
Charge and Discharge Overcurrent Detect (Limits for Charge Thresholds are Positive, While Discharge is Negative.)	V_{OC}	COCT = DOCT = 00b	15.6	16	16.4	mV
		COCT = DOCT = 01b	31.2	32	32.8	mV
		COCT = DOCT = 10b	47.0	48	49.0	mV
		COCT = DOCT = 11b	62.7	64	65.3	mV
Short-Circuit Detect	V_{SC}	DOCT = 00b	75	100	125	mV
		DOCT = 01b	105	140	175	mV
		DOCT = 10b	135	180	225	mV
		DOCT = 11b	165	220	275	mV
Overvoltage Delay	t_{OVD}		0.8	1	1.2	s
Undervoltage Delay	t_{UVD}		75	100	125	ms
Overcurrent Delay	t_{OCD}		15	20	25	ms
Short-Circuit Delay	t_{SCD}	SCDT = 1	1.5	2	2.5	ms
		SCDT = 0	187	250	313	µs
Secondary Short-Circuit Delay	t_{SSCD}	(Note 5)	20		200	µs
Test Threshold	V_{TP}		0.3	1.0	1.5	V
Test Current	I_{TST}		10	20	40	µA
Pulldown Current, PLS	I_{PD}	Sleep Mode		200		µA
Recovery Charge Current	I_{RC}	VPLS = 5.0V, V_{DD} = 2.0V	0.5	1	2	mA

ELECTRICAL CHARACTERISTICS: 2-WIRE INTERFACE

(2.5V ≤ V_{DD} ≤ 5.5V, T_A = -20°C to +70°C.)

PARAMETER	SYMBOL	CONDITIONS	MIN	TYP	MAX	UNITS
SCL Clock Frequency	f_{SCL}		0		400	KHz
Bus Free Time Between a STOP and START Condition	t_{BUF}		1.3			µs
Hold Time (Repeated) START Condition	$t_{HD:STA}$	(Note 6)	0.6			µs
Low Period of SCL Clock	t_{LOW}		1.3			µs
High Period of SCL Clock	t_{HIGH}		0.6			µs
Setup Time for a Repeated START Condition	$t_{SU:STA}$		0.6			µs
Data Hold Time	$t_{HD:DAT}$	(Note 7, 8)	0		0.9	µs
Data Setup Time	$t_{SU:DAT}$	(Note 7)	100			ns
Rise Time of both SDA and SCL Signals	t_R	(Note 9)	$20+0.1C_B$		300	ns
Fall Time of both SDA and SCL Signals	t_F	(Note 9)	$20+0.1C_B$		300	ns

PARAMETER	SYMBOL	CONDITIONS	MIN	TYP	MAX	UNITS
Setup Time for STOP Condition	$t_{SU:STO}$		0.6			µs
Spike Pulse Width that can be Suppressed by Input Filter	t_{SP}	(Note 10)	0		50	ns
Clock Low Time-Out	$t_{TIMEOUT}$	TTO_DIS = 0, (Note 11)	25		35	ms
Cumulative Clock Low Extend Time for Slave Device	$t_{LOW:SEXT}$	TLS_DIS = 0, (Note 12)			25	ms
Cumulative Clock Low Extend Time for Bus Master	$t_{LOW:MEXT}$	TTO_DIS = 0, TLS_DIS = 0 (Note 13)			10	ms
SCL, SDA Input Capacitance	C_{BIN}				60	pF

ELECTRICAL CHARACTERISTICS: JTAG INTERFACE

(2.5V ≤ V_{DD} ≤ 5.5V, T_A = -20°C to +70°C.)

PARAMETER	SYMBOL	CONDITIONS	MIN	TYP	MAX	UNITS
JTAG Logic Reference	V_{REF}			V_{DD} ÷ 2		V
TCK High Time	t_{TH}		4.0			µs
TCK Low Time	t_{TL}		4.0			µs
TCK Low to TDO Output	t_{TLQ}				1.0	µs
TMS, TDI Input Setup to TCK High	t_{DVTH}		1.0			µs
TMS, TDI Input Hold after TCK High	t_{THDX}		4.0			µs

Note 1: Maximum current assumuing 100% CPU duty cycle.
Note 2: This value does not include current in SDA, SCL, and P0.0–P0.5.
Note 3: All Voltages referenced to V_{SS}.
Note 4: Voltage register can report up to 4.992V, however VIN pin input saturation occurs at 4.75V minimum.
Note 5: The secondary short circuit delay is measured from the falling transition on V_{DD} to the resultant falling transition on DC. The delay is measured from the time V_{DD} reaches V_{POR} - 0.5V to the time DC reaches 50% of V_{CP} (4.5V).
Note 6: f_{SCL} must meet the minimum clock low time plus the rise/fall times.
Note 7: The maximum $t_{HD:DAT}$ has only to be met if the device does not stretch the LOW period (t_{LOW}) of the SCL signal.
Note 8: This device internally provides a hold time of at least 75ns for the SDA signal (referred to the VIHmin of the SCL signal) to bridge the undefined region of the falling edge of SCL.
Note 9: C_B—total capacitance of one bus line in pF.
Note 10: Filters on SDA and SCL suppress noise spikes at the input buffers and delay the sampling instant.
Note 11: Devices participating in data transfer will timeout when any clock low exceeds the minimum $t_{TIMEOUT}$ of 25ms. Devices that have detected a timeout condition must reset the communication no later than the maximum $t_{TIMEOUT}$ of 35ms. The maximum value specified must be adhered to by both devices as it incorporates the cumulative stretch limit for the master (10ms) and slave device (25ms).
Note 12: $t_{LOW:SEXT}$ is the cumulative time the slave is allowed to extend the clock from the initial START to the STOP. If the DS2790 exceeds this time, it will release both SDA and SCL and reset the communication interface.
Note 13: $t_{LOW:MEXT}$ is the cumulative time the master is allowed to extend the clock cycles within each byte of a communication sequence. If the bus master exceeds this time it is possible for the DS2790 to violate $t_{TIMEOUT}$ without having violated $t_{LOW:SEXT}$.

Figure 1. 2-Wire Bus Timing Diagram

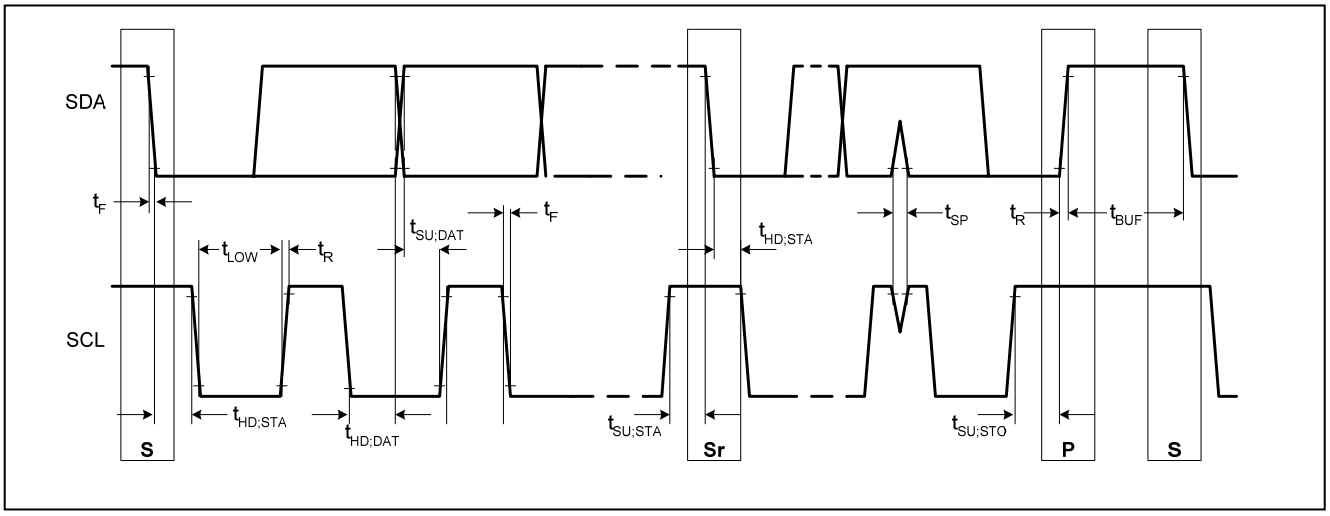

Figure 2. JTAG Timing Diagram

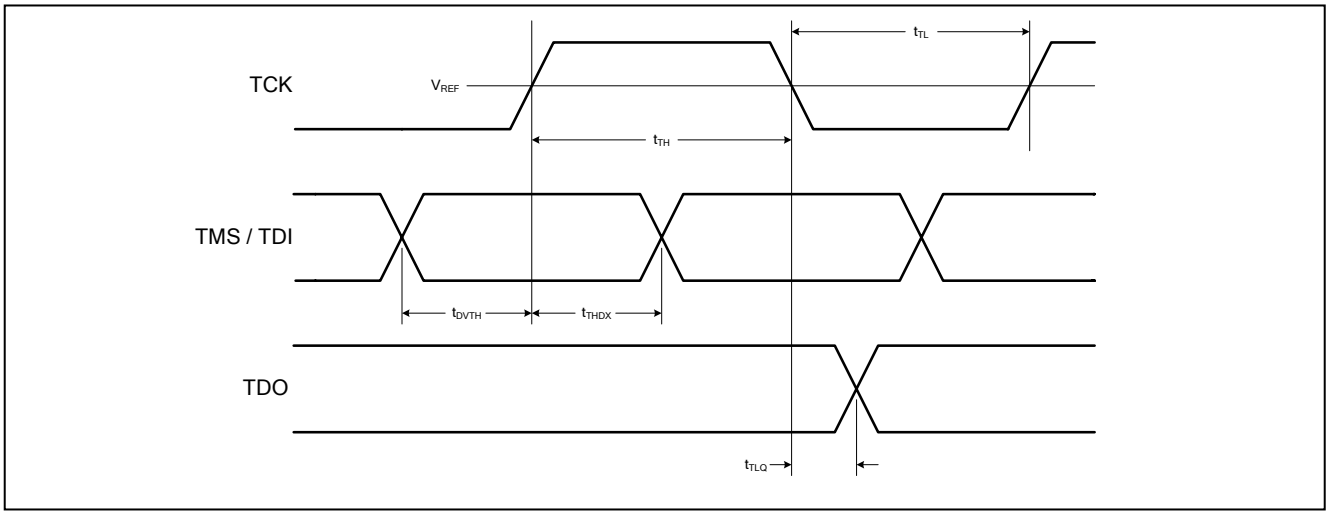

PIN DESCRIPTION

PIN	NAME	DESCRIPTION
1	N.C.	No Connection
2	N.C.	No Connection
3	CP	Charge Pump Output. Bypass CP to V_{SS} with 0.1µF.
4	PLS	Pack Plus. Positive pack terminal connection.
5	DC	Discharge Control. Discharge FET gate drive output.
6	CC	Charge Control. Charge FET gate drive output.
7	SCL	2-wire Serial Interface Clock Input and Output
8	SDA	2-wire Serial Interface Data Input and Output
9	P0.0	Programmable I/O Pin. Alternate functions: external interrupt input INT0, [JTAG TDI].
10	P0.1	Programmable I/O Pin. Alternate functions: External interrupt input INT1, [JTAG TMS].
11	SNS2	Current Sense Input. SNS2 attaches to pack end of current sense resistor.
12	IS2	Current Filter Input 2
13	N.C.	No Connection
14	N.C.	No Connection
15	N.C.	No Connection
16	N.C.	No Connection
17	IS1	Current Filter Input 1
18	SNS1	Current Sense Input. SNS1 attaches to battery end of current sense resistor and V_{SS}.
19	AVSS	Analog Supply Return Node. AVSS attaches to negative battery terminal.
20	V_{SS}	Digital Supply Return Node. V_{SS} attaches to negative battery terminal.
21	P0.2	Programmable I/O Pin. Alternate functions: Reset input pin $\overline{RST}$.
22	P0.3	Programmable I/O Pin. Alternate functions: Timer/Counter input pin TCK, [JTAG TCK].
23	P0.4	Programmable I/O Pin. Alternate function: [JTAG TDO]
24	P0.5	Programmable I/O Pin
25	V_{DD}	Input Supply: +2.5V to +5.5V input range. Bypass V_{DD} to V_{SS} with 0.1µF.
26	V_{IN}	Battery voltage sense input, measurement relative to AVSS.
27	N.C.	No Connection
28	N.C.	No Connection
—	PAD	Exposed PAD (TDFN only). Not electrically connected to IC. Connect to V_{SS} or leave floating.

FUNCTIONAL DIAGRAM

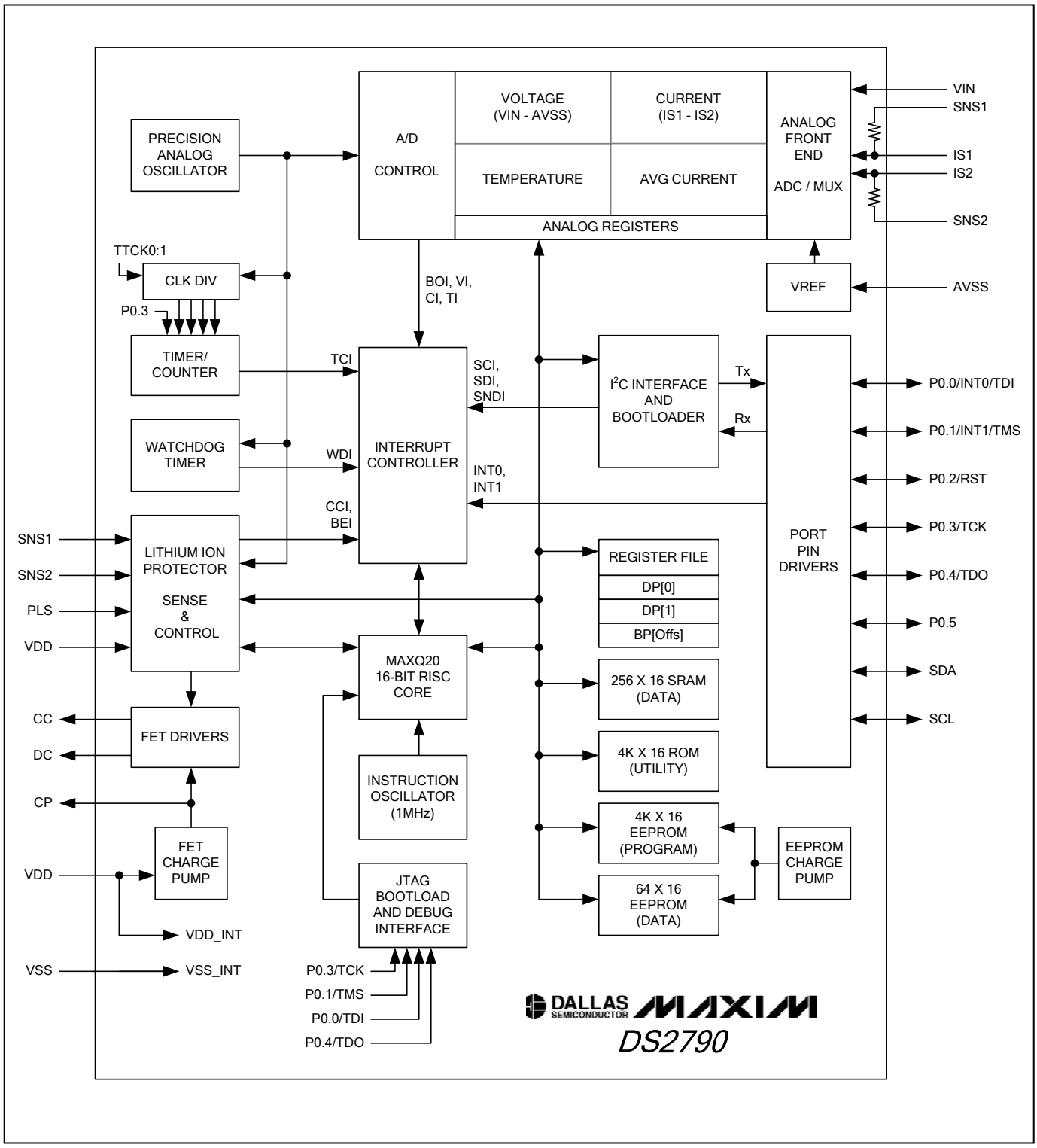

DETAILED DESCRIPTION

The following is an introduction to the primary features of the DS2790 Programmable 1-Cell Li-Ion Fuel Gauge and Protector. More detailed descriptions of the device features can be found in the errata sheets, and user's guides described later in the *Additional Documentation* section.

DS2790 Overview

The DS2790 incorporates the 16-bit MAXQ20 microcontroller core with 16 accumulators and 16-level hardware stack. Four memory blocks provide application code space, utility code space, RAM memory, and EEPROM memory. Specialized peripherals are integrated to perform battery monitoring, coulomb counting, Lithium-Ion protection, and 2-wire communication functions. The MAXQ20 core along with the specialized peripherals provide a flexible solution for fuel gauging and protection of Lithium-Ion battery packs. Flexibility is further enhanced as the solution allows for upgrading of the program and data EEPROM contents over the 2-wire interface. Updates to the program and data EEPROM are protected against unauthorized writes by a 256-bit user password. A read protection bit is provided to prevent reading either EEPROM.

MAXQ20 Core Architecture

The DS2790 employs a MAXQ20 low-cost, high-performance, CMOS, fully static, 16-bit RISC microcontroller with EEPROM memory. It is structured on a highly advanced, 16 accumulator-based, 16-bit RISC architecture. Fetch and execution operations are completed in one cycle without pipelining, since the instruction contains both the op code and data. The highly efficient core is supported by 16 accumulators and a 16-level hardware stack, enabling fast subroutine calling and task switching. Data can be quickly and efficiently manipulated with three internal data pointers. Multiple data pointers allow more than one function to access data memory without having to save and restore data pointers each time. The data pointers can automatically increment or decrement following an operation, eliminating the need for software intervention.

Instruction Set

The instruction set is composed of fixed-length, 16-bit instructions that operate on registers and memory locations. The instruction set is highly orthogonal, allowing arithmetic and logical operations to use any register along with the accumulator. Special-function registers control the peripherals and are subdivided into register modules. The family architecture is modular, so that new devices and modules can reuse code developed for existing products

The architecture is transport-triggered. This means that writes or reads from certain register locations can also cause side effects to occur. These side effects form the basis for higher-level op codes defined by the assembler, such as ADDC, OR, JUMP, etc. The op codes are implemented as MOVE instructions between certain register locations, while the assembler handles the encoding, which need not be a concern to the programmer. The 16-bit instruction word is designed for efficient execution.

Bit 15 indicates the format for the source field of the instruction. Bits 0 to 7 of the instruction represent the source for the transfer. Depending on the value of the format field, this can either be an immediate value or a source register. If this field represents a register, the lower four bits contain the module specifier and the upper four bits contain the register index in that module.

Bits 8 to 14 represent the destination for the transfer. This value always represents a destination register, with the lower four bits containing the module specifier and the upper three bits containing the register subindex within that module. Any time that it is necessary to directly select one of the upper 24 registers as a destination, the prefix register PFX is needed to supply the extra destination bits. This prefix register write is inserted automatically by the assembler and requires only one additional execution cycle. See the *MAXQ Family User's Guide* for complete instruction set information.

Memory Organization

The DS2790 incorporates several memory areas:

- 4k words of utility ROM contain a debugger, program loader, and SHA-1 routines
- 4k words of EEPROM memory for application program storage
- 256 words of SRAM for storage of temporary variables
- 64 words of EEPROM memory for data storage
- 8 words of ADC conversion data information
- 16-level stack memory for storage of program return addresses and general-purpose use

The memory is implemented using the Harvard architecture, with separate address spaces for program and data memory. A pseudo-Von Neumann memory map is also utilized placing ROM, application code, and data memory into a single contiguous memory map. The pseudo-Von Neumann memory map allows data memory to be mapped into program space, permitting code execution from data memory. In addition program memory may be mapped into data space, permitting code constants to be accessed as data memory. Figure 3 shows the DS2790's memory map when executing from program memory space. See the *MAXQ Family User's Guide: DS2790 Supplement* for memory map information when executing from data or ROM space.

The incorporation of EEPROM memory allows field upgrade of the firmware. EEPROM memory can be password protected with a 16-word key, denying access to program memory by unauthorized individuals. ROM memory is also available for high-volume, low-cost applications. Contact Dallas Semiconductor for more information on the availability of ROM-based devices.

Figure 3. DS2790 Memory Map

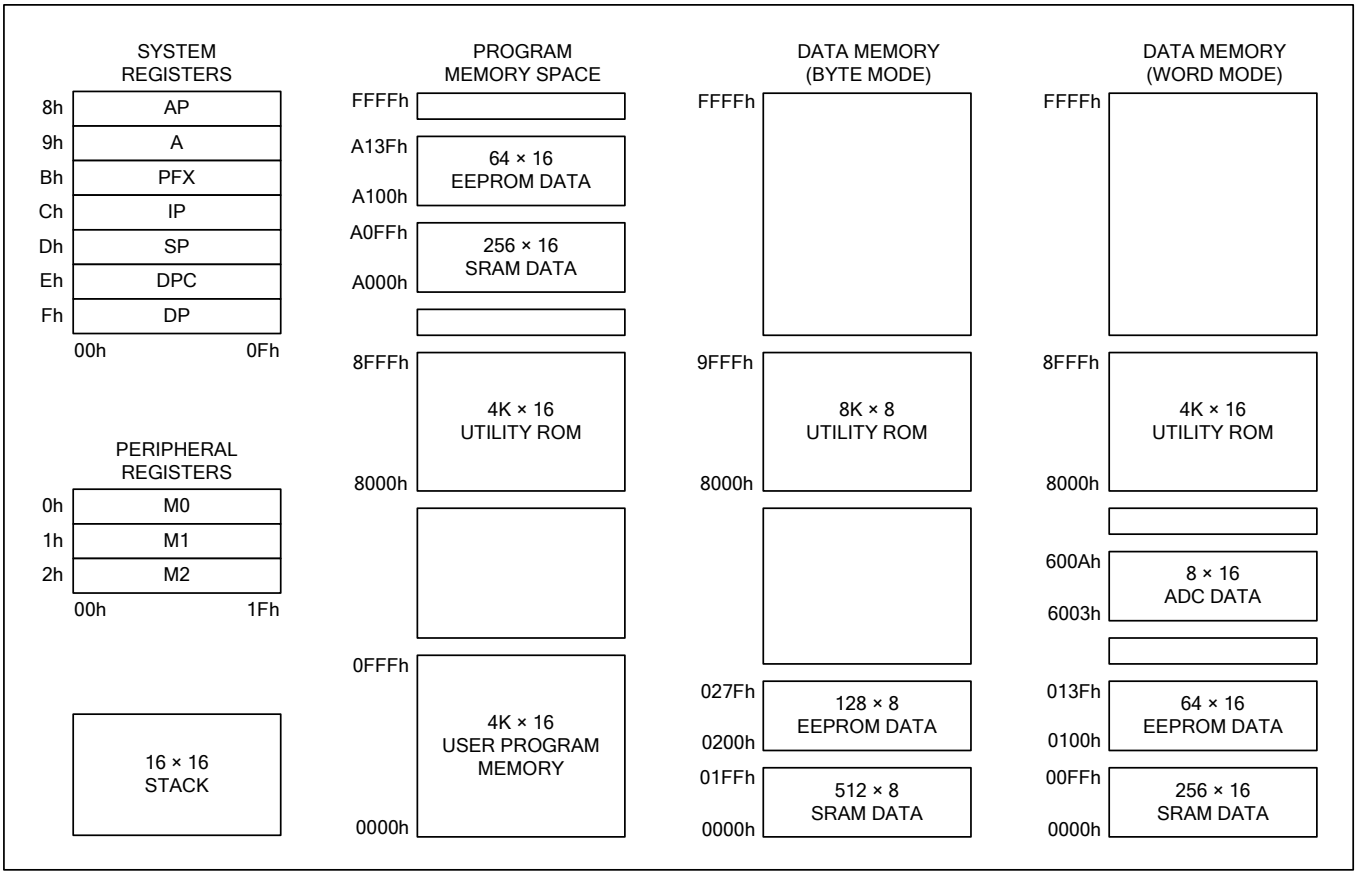

Stack Memory

A 16-bit, 16-level internal stack provides storage for program return addresses and general-purpose use. The stack is used automatically by the processor when the CALL, RET, and RETI instructions are executed and interrupts serviced. The stack can also be used explicitly to store and retrieve data by using the PUSH, POP, and POPI instructions.

On reset, the stack pointer, SP, initializes to the top of the stack (0Fh). The CALL, PUSH, and interrupt-vectoring operations increment SP, then store a value at the location pointed to by SP. The RET, RETI, POP, and POPI operations retrieve the value at "@SP" and then decrement SP.

Utility ROM

The utility ROM is a 4k word block of internal ROM memory that defaults to a starting address of 8000h. The utility ROM consists of subroutines that can be called from application software. These include:

- In-system programming (bootstrap loader) over JTAG or 2-wire interfaces
- In-circuit debug routines
- Internal self-test routines
- callable routines for in-application EEPROM programming and SHA-1 calculations

Following any reset, execution begins in the utility ROM. The ROM software determines whether the program execution should immediately jump to location 0000h, the start of application code, or to one of the special routines mentioned. Routines within the utility ROM are firmware-accessible and can be called as subroutines by the application software. More information on the utility ROM contents is contained in the *MAXQ Family User's Guide: DS2790 Supplement*.

Some applications require protection against unauthorized viewing of program code memory. For these applications, access to in-system programming, in-application programming, or in-circuit debugging functions is prohibited until a password has been supplied. The password is defined as the 16 words of physical program memory at addresses x0010h to x001Fh. Upon startup, code in the ROM examines the password, if a password is defined (password is other than all zero's or all one's), the PWL bit remains set, which prohibits access to commands to read memory contents over the JTAG and 2-wire interfaces.

A single Password Lock (PWL) bit is implemented in the SC register. When the PWL is set to one (power-on reset default), the password is required to access the utility ROM, including in-circuit debug and in-system programming routines that allow reading or writing of internal memory. When PWL is cleared to zero, these utilities are fully accessible without password. The password is automatically set to all ones following a mass erase.

PROGRAMMING

The EEPROM memory of the microcontroller can be programmed by two different methods: in-system programming and in-application programming. Both methods afford great flexibility in system design as well as reduce the life-cycle cost of the embedded system. These features can be password protected to prevent unauthorized access to code memory.

In-System Programming

An internal bootstrap loader allows the device to be programmed over the JTAG or 2-wire interfaces. As a result, system software can be upgraded in-system, eliminating the need for a costly hardware retrofit when software updates are required. Remote software uploads are possible that enable physically inaccessible applications to be frequently updated. The JTAG interface hardware can be a JTAG connection to another microcontroller, or a connection to a PC serial port using a serial to JTAG converter such as the MAXQJTAG-001, available from Maxim Integrated Products. The 2-wire interface hardware can be an I^2C connection to another microcontroller, or a connection to a PC USB port using a USB to I^2C converter such as the DS9123O, available from Dallas Semiconductor. A commercial gang programmer can also be used for programming.

Activating the JTAG interface and loading the Test Access Port (TAP) with the system programming instruction invokes the bootstrap loader for use over the JTAG interface. Setting the SPE bit to 1 during reset through the JTAG interface executes the bootstrap-loader-mode program that resides in the utility ROM. When programming is complete, the bootstrap loader can clear the SPE bit and reset the device, allowing the device to bypass the utility ROM and begin execution of the application software.

Performing a program request over the 2-wire interface also invokes the bootstrap loader. The user must successfully complete a password match (If PWL = 1). The bootstrap loader functions are then fully supported over the 2-wire interface. When programming is complete, the exit loader function is used to reset the DS2790 and begin execution of the application software.

The following bootstrap loader functions are supported:

- Information Commands
- Load EEPROM Code and Data
- Dump EEPROM Code and Data
- CRC EEPROM Code and Data
- Verify EEPROM Code and Data
- Erase EEPROM Code and Data

In-Application Programming

The in-application programming feature allows the microcontroller to modify its own EEPROM program memory. This allows on-the-fly software updates in mission-critical applications that cannot afford downtime. Alternatively, it allows the application to develop custom loader software that can operate under the control of the application software. The utility ROM contains firmware-accessible EEPROM programming functions that erase and program EEPROM memory. These functions are described in detail in the *MAXQ Family User's Guide: DS2790 Supplement*.

SYSTEM TIMING

The DS2790 generates its 1MHz instruction clock (OSCI) internally. This quick starting oscillator is used for instruction fetch and execution by the MAXQ20 core. The analog oscillator (OSCA) is a band-gap based RC oscillator that is trimmed to better than 2% accuracy. The analog clock runs independent of OSCI and serves as the clock source for the ADC, watchdog timer, interval timer, and 2-wire timeouts.

OSCI is enabled through either a system interrupt or system POR and disabled through a system STOP. A voltage brown out detection circuit disables OSCI if V_{DD} falls below V_{BO}. Once V_{DD} raises above V_{BO}, a hysteresis circuit waits $t_{SU:OSCI}$ before re-enabling OSCI. OSCA is enabled by the Watchdog Timer signals EWDI or EWT, the Timer / Counter (TMOD), or by the protection circuitry (PMM[1:0]).

Figure 4. System Clocks

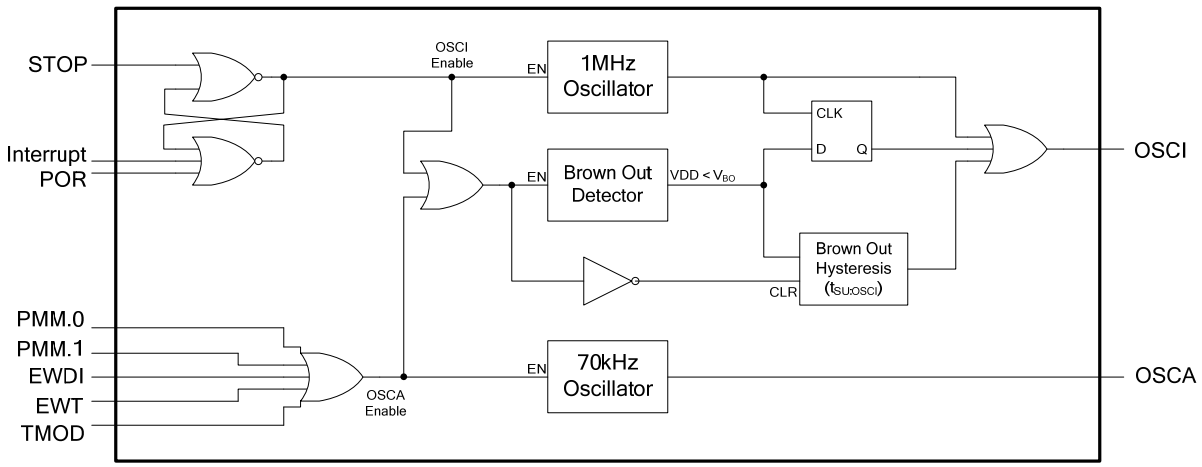

SYSTEM RESET

Several reset sources are provided for microcontroller control. Although code execution is halted in the reset state, OSCI continues to run.

Power-On Reset - An internal power-on reset circuit enhances system reliability. This circuit forces the device to perform a power-on reset whenever a rising voltage on V_{DD} climbs above V_{POR}. At this point the following events occur:

- All registers and circuits enter their reset state,
- The POR flag (WDCN.7) is set to indicate the source of the reset,
- Code execution begins at location 8000h

Watchdog Timer Reset - A few differences exist between the watchdog timer in the DS2790 and the one described in the *MAXQ Family User's Guide* as described in the Watchdog Timer section. Software can determine if a reset is caused by a watchdog timeout by checking the Watchdog Timer Reset Flag (WTRF) in the WDCN register. Execution resumes at location 8000h following a watchdog timer reset.

External System Reset - Asserting the external $\overline{RST}$ (port P0.2) pin low causes the device to enter the reset state. The external reset function is described in the *MAXQ Family User's Guide*. Execution resumes at location 8000h after the $\overline{RST}$ pin is released.

MAXQ20 CORE POWER MANAGEMENT

The DS2790 is designed for low power battery monitoring applications. The peripherals have been designed with the ability to wake the processor from Stop mode any time software intervention is needed. Power management is optimized in the applications by performing any necessary processing as quickly as possible, and re-entering the low power Stop mode. Processing resumes from stop mode via any of the following sources (when enabled):

- An external interrupt is triggered.
- An external reset signal is applied to the $\overline{RST}$ pin.
- A Watchdog Timer interrupt occurs.
- An internal interrupt event occurs.

No division of the internal system clock is supported, subsequently the PMME and CD[1:0] bits described in the *MAXQ users guide* are not implemented in the DS2790.

WATCHDOG TIMER

The watchdog timer provides a mechanism to reset the processor in the case of undesirable code execution. The watchdog timer is a hardware timer designed to be periodically reset by the application software. If the software operates correctly, the timer is reset before it reaches its maximum count. However, if undesireable code execution prevents a reset of the watchdog timer, the timer reaches its maximum count and resets the processor.

The watchdog timer in the DS2790 differs in two respects from the one described in the *MAXQ Family User's Guide*: 1) the clock used by the timer is the 70kHz OSCA clock that runs independently of the 1MHz OSCI (or system) clock, and 2) the watchdog interrupt is an asynchronous interrupt that can bring the processor out of stop mode.

The watchdog timer is controlled through bits in the WDCN register. Its timeout period can be set to one of the four programmable intervals ranging from 2^{12} to 2^{21} OSCA clock periods (59ms up to 30s). The watchdog interrupt occurs at the end of this timeout period, which is 512 OSCA clock periods, or 7.3ms, before the reset.

DS2790 POWER MODES

When power is first applied to the DS2790, a Power-on-Reset (POR) circuit transitions the IC to Brown-Out State where cell voltage is monitored. If V_{DD} voltage is above the brown-out threshold V_{BO}, the DS2790 enters CPU state and begins code execution. Firmware determines if the IC switches to ANALOG State or low-power SLEEP States when a STOP halts CPU operation.

The DS2790 enters SLEEP state after a CPU STOP if the ADC, the protector, and all internal timers are disabled. In SLEEP State, all IC operation becomes inactive except for external activity interrupts. Brown-Out detection does not occur in SLEEP State. Any interrupt generated by 2-wire port communication, external input on ports P0.0 or P0.1, or a charger detection on PLS will transition the DS2790 from SLEEP to Brown-Out to verify cell voltage before returning to CPU State. The DS2790 enters ANALOG State after a CPU STOP if any one of the following is active: the ADC, the protector, the interval timer or the watchdog timer. An external interrupt or an interrupt from any active internal circuit causes the DS2790 to transition back to CPU State to service the condition.

If the DS2790 is in ANALOG or CPU State, and V_{DD} falls below V_{BO}, a brown-out condition occurs and the DS2790 enters the Brown-Out State. In Brown-Out State, the processor is halted without changing the instruction pointer. If V_{DD} voltage rises above V_{BO} within a time of $t_{SU:OSCI}$, the DS2790 returns to CPU state and generates a brown-out interrupt (if enabled). Otherwise, if V_{DD} remains below V_{BO} for $t_{SU:OSCI}$, the DS2790 enters an inactive state where it waits for a charger to be applied. When charge voltage is sensed on PLS, the DS2790 returns to the Brown-Out State where V_{DD} voltage is verified before returning to CPU State.

Figure 5. DS2790 State Diagram

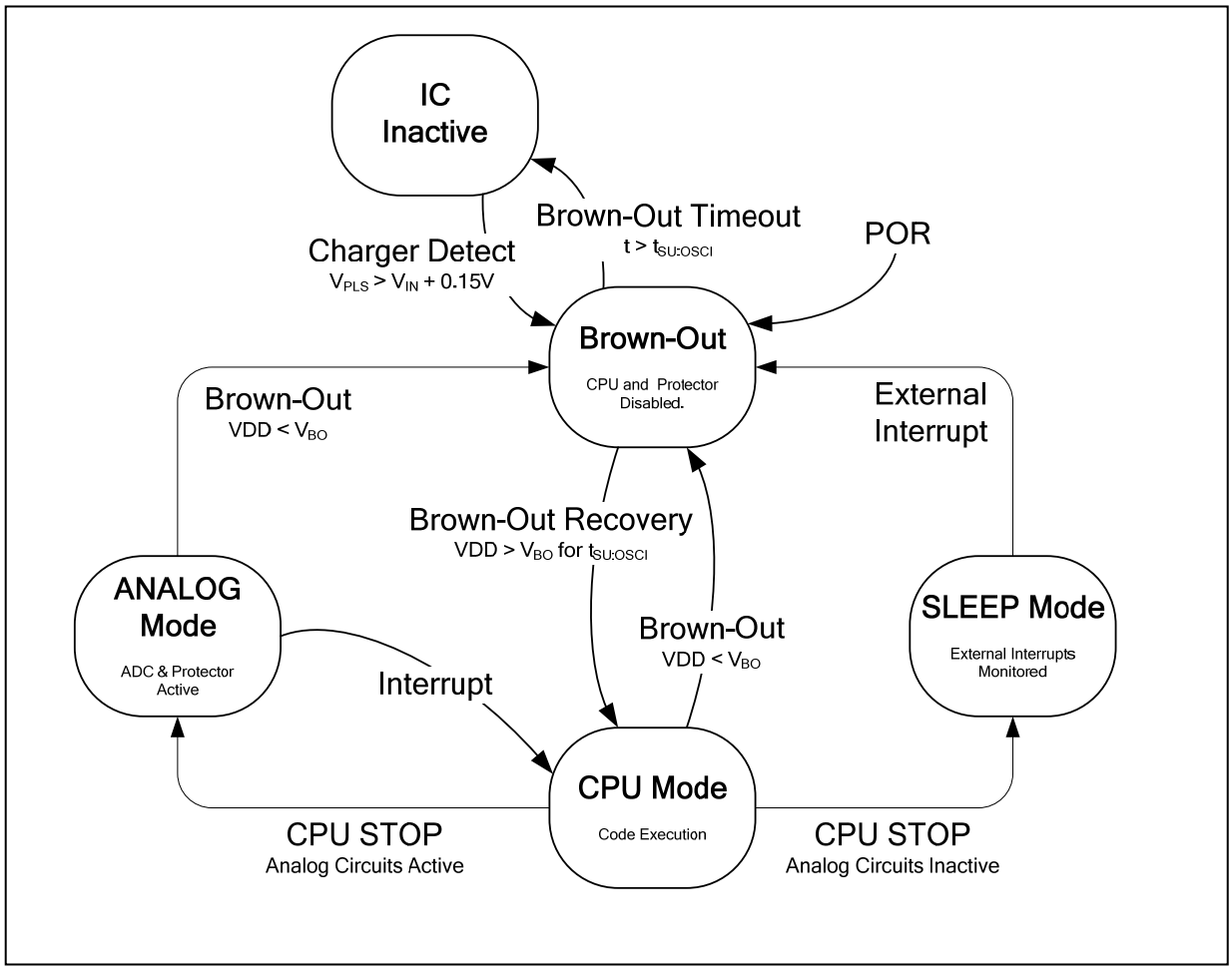

REGISTER SET

Most functions of the device are controlled by sets of registers. These registers provide a working space for memory operations as well as configuring and addressing peripheral registers on the device. Registers are divided into two major types: system registers and peripheral registers. The common register set, also known as the system registers, includes the ALU, accumulator registers, data pointers, interrupt vectors and control, and stack pointer. The peripheral registers define additional functionality that may be included by different products based on the MAXQ20 architecture. This functionality is broken up into discrete modules so that only the features required for a given product need to be included. Table 1 shows the DS2790 register set.

Table 1. System Register Map

REGISTER INDEX	MODULE NAME (BASE SPECIFIER)						
	AP (8h)	**A (9h)**	**PFX (Bh)**	**IP (Ch)**	**SP (Dh)**	**DPC (Eh)**	**DP (Fh)**
00h	AP	**A[0]**	**PFX**	**IP**	—	—	—
01h	APC	**A[1]**	—	—	**SP**	—	—
02h	—	**A[2]**	—	—	**IV**	—	—
03h	—	**A[3]**	—	—	—	Offs	**DP0**
04h	PSF	**A[4]**	—	—	—	**DPC**	—
05h	IC	**A[5]**	—	—	—	**GR**	—
06h	IMR	**A[6]**	—	—	**LC0**	GRL	—
07h	—	**A[7]**	—	—	**LC1**	**BP**	**DP1**
08h	SC	**A[8]**	—	—	—	***GRS***	—
09h	—	**A[9]**	—	—	—	GRH	—
0Ah	—	**A[10]**	—	—	—	***GRXL***	—
0Bh	*IIR*	**A[11]**	—	—	—	***FP***	—
0Ch	—	**A[12]**	—	—	—	—	—
0Dh	—	**A[13]**	—	—	—	—	—
0Eh	CKCN	**A[14]**	—	—	—	—	—
0Fh	WDCN	**A[15]**	—	—	—	—	—

Note: Names that appear in italics indicate that all bits of a register are read-only. Names that appear in bold indicate that a register is 16 bits wide. Registers in module AP are bit addressable.

Table 2. System Register Bit Functions

REGISTER	REGISTER BIT NUMBER															
	15	14	13	12	11	10	9	8	7	6	5	4	3	2	1	0
AP									—	—	—	—	AP (4 bits)			
APC									CLR	IDS	—	—	—	MOD2	MOD1	MOD0
PSF									Z	S	—	GPF1	GPF0	OV	C	E
IC									—	—	—	—	—	—	INS	IGE
IMR									IMS	—	—	—	—	—	IM1	IM0
SC									TAP	—	—	—	—	ROD	PWL	—
IIR									IIS	—	—	—	—	—	II1	II0
CKCN									—	—	—	STOP	—	—	—	—
WDCN									POR	EWDI	WD1	WD0	WDIF	WTRF	EWT	RWT
A[n] (0..15)	A[n] (16 bits)															
PFX	PFX (16 bits)															
IP	IP (16 bits)															
SP	—	—	—	—	—	—	—	—	—	—	—	—	SP (4 bits)			
IV	IV (16 bits)															
LC[0]	LC[0] (16 bits)															
LC[1]	LC[1] (16 bits)															
Offs									Offs (8 bits)							
DPC	—	—	—	—	—	—	—	—	—	—	—	WBS2	WBS1	WBS0	SDPS1	SDPS0
GR	GR.15	GR.14	GR.13	GR.12	GR.11	GR.10	GR.9	GR.8	GR.7	GR.6	GR.5	GR.4	GR.3	GR.2	GR.1	GR.0
GRL									GR.7	GR.6	GR.5	GR.4	GR.3	GR.2	GR.1	GR.0
BP	BP (16 bits)															
GRS	GR.7	GR.6	GR.5	GR.4	GR.3	GR.2	GR.1	GR.0	GR.15	GR.14	GR.13	GR.12	GR.11	GR.10	GR.9	GR.8
GRH									GR.15	GR.14	GR.13	GR.12	GR.11	GR.10	GR.9	GR.8
GRXL	GR.7	GR.7	GR.7	GR.7	GR.7	GR.7	GR.7	GR.7	GR.7	GR.6	GR.5	GR.4	GR.3	GR.2	GR.1	GR.0
FP	FP (16 bits)															
DP[0]	DP[0] (16 bits)															
DP[1]	DP[1] (16 bits)															

Table 3. System Register Bit Reset Values

REGISTER	REGISTER BIT															
	15	14	13	12	11	10	9	8	7	6	5	4	3	2	1	0
AP									0	0	0	0	0	0	0	0
APC									0	0	0	0	0	0	0	0
PSF									1	0	0	0	0	0	0	0
IC									0	0	0	0	0	0	0	0
IMR									0	0	0	0	0	0	0	0
SC									0	0	0	0	0	0	s	0
IIR									0	0	0	0	0	0	0	0
CKCN									0	0	0	0	0	0	0	0
WDCN									s	s	0	0	0	s	s	0
A[n] (0..15)	0	0	0	0	0	0	0	0	0	0	0	0	0	0	0	0
PFX	0	0	0	0	0	0	0	0	0	0	0	0	0	0	0	0
IP	1	0	0	0	0	0	0	0	0	0	0	0	0	0	0	0
SP	0	0	0	0	0	0	0	0	0	0	0	0	1	1	1	1
IV	0	0	0	0	0	0	0	0	0	0	0	0	0	0	0	0
LC[0]	0	0	0	0	0	0	0	0	0	0	0	0	0	0	0	0
LC[1]	0	0	0	0	0	0	0	0	0	0	0	0	0	0	0	0
Offs									0	0	0	0	0	0	0	0
DPC	0	0	0	0	0	0	0	0	0	0	0	0	0	0	0	0
GR	0	0	0	0	0	0	0	0	0	0	0	0	0	0	0	0
GRL									0	0	0	0	0	0	0	0
BP	0	0	0	0	0	0	0	0	0	0	0	0	0	0	0	0
GRS	0	0	0	0	0	0	0	0	0	0	0	0	0	0	0	0
GRH									0	0	0	0	0	0	0	0
GRXL	0	0	0	0	0	0	0	0	0	0	0	0	0	0	0	0
FP	0	0	0	0	0	0	0	0	0	0	0	0	0	0	0	0
DP0	0	0	0	0	0	0	0	0	0	0	0	0	0	0	0	0
DP1	0	0	0	0	0	0	0	0	0	0	0	0	0	0	0	0

Note: s indicates bit reflects pin state.

Table 4. Peripheral Register Map

REGISTER INDEX	MODULE			REGISTER INDEX	MODULE		
	M0 (0h)	M1 (1h)	M2 (2h)		M0 (0h)	M1 (1h)	M2 (2h)
00h	PO	**TWSINT**	—	10h	—	—	—
01h	PPU	**TWSIM**	—	11h	—	—	—
02h	PAF	*TWSCMD*	—	12h	—	—	—
03h	**EIC**	**TWSCFG**	—	13h	—	—	—
04h	**EINT**	TWSTXD/RXD	—	14h	—	—	—
05h	**PROT**	—	—	15h	—	—	—
06h	**TC**	—	—	16h	—	—	—
07h	TCC	—	—	17h	—	—	—
08h	*PI*	—	—	18h	**ICDT0**	—	—
09h	—	*TWSFIF*	—	19h	**ICDT1**	—	—
0Ah	—	—	—	1Ah	*ICDC*	—	—
0Bh	—	—	—	1Bh	ICDF	—	—
0Ch	—	—	—	1Ch	ICDB	—	—
0Dh	—	—	ECNTL	1Dh	***ICDA***	—	—
0Eh	—	—	**EADDR**	1Eh	***ICDD***	—	—
0Fh	—	—	**EDATA**	1Fh	—	—	—

Note: Names that appear in italics indicate that all bits of a register are read-only. Names that appear in bold indicate that a register is 16 bits. All locations are bit addressable.

Table 5. Peripheral Register Bit Functions

REGISTER	REGISTER BIT NUMBER															
	15	14	13	12	11	10	9	8	7	6	5	4	3	2	1	0
PO									—	—	PO.5	PO.4	PO.3	PO.2	PO.1	PO.0
PPU									SDA_PU	SCL_PU	PPU.5	PPU.4	PPU.3	PPU.2	PPU.1	PPU.0
PAF									—	RSTD	PAF.5	PAF.4	PAF.3	PAF.2	PAF.1	PAF.0
EIC	MBOI	MSCI	MSDI	MSNDI	MCCI	MBEI	MVI	MCI	MTI	MTCI	PIP.1	PIP.0	PIT.1	PIT.0	PIE.1	PIE.0
EINT	BOI	SCI	SDI	SNDI	CCI	BEI	VI	CI	TI	TCI	—	—	—	$\overline{RST}$	INT.1	INT.0
PROT	COCF	DOCF	SCF	OVF	UVF	—	*CC*	*DC*	—	—	—	—	CE	DE	PMM.1	PMM.0
TC	THI.7	THI.6	THI.5	THI.4	THI.3	THI.2	THI.1	THI.0	TLOW.7	TLOW.6	TLOW.5	TLOW.4	TLOW.3	TLOW.2	TLOW.1	TLOW.0
TTC									—	—	—	—	—	TTCK.1	TTCK.0	TMOD
PI									*SDA*	*SCL*	*PI.5*	*PI.4*	*PI.3*	*PI.2*	*PI.1*	*PI.0*
ICDT0	ICDT0.15	ICDT0.14	ICDT0.13	ICDT0.12	ICDT0.11	ICDT0.10	ICDT0.9	ICDT0.8	ICDT0.7	ICDT0.6	ICDT0.5	ICDT0.4	ICDT0.3	ICDT0.2	ICDT0.1	ICDT0.0
ICDT1	ICDT1.15	ICDT1.14	ICDT1.13	ICDT1.12	ICDT1.11	ICDT1.10	ICDT1.9	ICDT1.8	ICDT1.7	ICDT1.6	ICDT1.5	ICDT1.4	ICDT1.3	ICDT1.2	ICDT1.1	ICDT1.0
ICDC									*DME*	—	*REGE*	—	*CMD.3*	*CMD.2*	*CMD.1*	*CMD.0*
ICDF									—	—	—	—	PSS.1	PSS.0	SPE	TXC
ICDB									ICDB.7	ICDB.6	ICDB.5	ICDB.4	ICDB.3	ICDB.2	ICDB.1	ICDB.0
ICDA	*ICDA.15*	*ICDA.14*	*ICDA.13*	*ICDA.12*	*ICDA.11*	*ICDA.10*	*ICDA.9*	*ICDA.8*	*ICDA.7*	*ICDA.6*	*ICDA.5*	*ICDA.4*	*ICDA.3*	*ICDA.2*	*ICDA.1*	*ICDA.0*
ICDD	*ICDD.15*	*ICDD.14*	*ICDD.13*	*ICDD.12*	*ICDD.11*	*ICDD.10*	*ICDD.9*	*ICDD.8*	*ICDD.7*	*ICDD.6*	*ICDD.5*	*ICDD.4*	*ICDD.3*	*ICDD.2*	*ICDD.1*	*ICDD.0*
TWSINT	—	—	—	—	TIMEOUT	STOP	RESTART_READ	RESTART_WRITE	START	TXD_BYTE	TXD_EMPTY	TXD_FULL	RXD_CMD	RXD_BYTE	RXD_EMPTY	RXD_FULL
TWSIM	—	—	—	—	TIMEOUT_MASK	STOP_MASK	RESTART_READ_MASK	RESTART_WRITE_MASK	START_MASK	TXD_BYTE_MASK	TXD_EMPTY_MASK	TXD_FULL_MASK	RXD_CMD_MASK	RXD_BYTE_MASK	RXD_EMPTY_MASK	RXD_FULL_MASK
TWSCMD									*TWSCMD.7*	*TWSCMD.6*	*TWSCMD.5*	*TWSCMD.4*	*TWSCMD.3*	*TWSCMD.2*	*TWSCMD.1*	*TWSCMD.0*
TWSCFG	ADDR.6	ADDR.5	ADDR.4	ADDR.3	ADDR.2	ADDR.1	ADDR.0	0	0	0	0	TOUT_LONG	TLS_DIS	TTO_DIS	CMD_HM	CMD_HM_DIS
TWSTXD/RXD									TXD/RXD.7	TXD/RXD.6	TXD/RXD.5	TXD/RXD.4	TXD/RXD.3	TXD/RXD.2	TXD/RXD.1	TXD/RXD.0
TWSFIF									*LTX.3*	*LTX.2*	*LTX.1*	*LTX.0*	*LRX.3*	*LRX.2*	*LRX.1*	*LRX.0*

Note: Names that appear in italics indicate a read-only register bit.

Table 6. Peripheral Register Reset Values

REGISTER	REGISTER BIT NUMBER															
	15	**14**	**13**	**12**	**11**	**10**	**9**	**8**	**7**	**6**	**5**	**4**	**3**	**2**	**1**	**0**
PO									0	0	1	1	1	1	1	1
PPU									0	0	0	0	0	1	0	0
PAF									0	0	0	0	0	1	0	0
EIC	0	0	0	0	0	0	0	0	0	0	0	0	0	0	0	0
EINT	0	0	0	0	0	0	0	0	0	0	0	0	0	0	0	0
PROT	0	0	0	0	0	0	0	0	0	0	0	0	0	0	0	0
TC	0	0	0	0	0	0	0	0	0	0	0	0	0	0	0	0
TTC									0	0	0	0	0	0	0	0
PI									s	s	s	s	s	s	s	s
ICDT0	0	0	0	0	0	0	0	0	0	0	0	0	0	0	0	0
ICDT1	0	0	0	0	0	0	0	0	0	0	0	0	0	0	0	0
ICDC									0	0	0	0	0	0	0	0
ICDF									0	0	0	0	0	0	0	0
ICDB									0	0	0	0	0	0	0	0
ICDA	0	0	0	0	0	0	0	0	0	0	0	0	0	0	0	0
ICDD	0	0	0	0	0	0	0	0	0	0	0	0	0	0	0	0
TWSINT	0	0	0	0	0	0	0	0	0	0	0	0	0	0	0	0
TWSIM	0	0	0	0	0	0	0	0	0	0	0	0	0	0	0	0
TWSCMD									0	0	0	0	0	0	0	0
TWSCFG	0	0	0	1	0	1	1	0	0	0	0	0	0	0	0	0
TWSTXD/RXD									0	0	0	0	0	0	0	0
TWSFIF									0	0	0	0	0	0	0	0

Note: s indicates bit reflects pin state.

SYSTEM INTERRUPTS

Multiple interrupt sources are available for quick response to internal and external events. The MAXQ20 architecture uses a single interrupt vector (IV), single interrupt-service routine (ISR) design. For maximum flexibility, interrupts can be enabled globally, individually, or by module. When an interrupt condition occurs, its individual flag is set, even if the interrupt source is disabled at the local, module, or global level. Interrupt flags must be cleared within the firmware-interrupt routine to avoid repeated interrupts from the same source. Application software must ensure a delay between the write to the flag and the RETI instruction to allow time for the interrupt hardware to remove the internal interrupt condition. Asynchronous interrupt flags require a one-instruction delay and synchronous interrupt flags require a two-instruction delay.

When an enabled interrupt is detected, execution jumps to a user-programmable interrupt vector location. The IV register defaults to 0000h on reset or power-up, so if it is not changed to a different address, application firmware must determine whether a jump to 0000h came from a reset or interrupt source.

Once control has been transferred to the ISR, the interrupt identification register (IIR) can be used to determine if a system register or peripheral register was the source of the interrupt. The specified module can then be interrogated for the specific interrupt source and software can take appropriate action. Interrupts are evaluated by application code allowing the definition of a unique interrupt priority scheme for each application. Interrupt sources are available from the Watchdog timer described in the *MAXQ users guide*, the TWSINT Register described in the 2-Wire Interface section, and the EINT Register as shown in Figure 6.

EINT Register

The EINT Register contains interrupts generated by the ADC, the timer-counter, the protection circuits, the general purpose port pins and the serial-interface port pins. Their masks and their configuration bits, along with the $\overline{RST}$ pin status and control, are present in the EIC and PAF registers of module 0.

Figure 6. EINT Register Interrupt Sources

GENERATOR	INTERRUPT	MASK	DESCRIPTION	FREQUENCY
Ports and Pins	INT0	PAF.0/PIE.0	The **interrupt from pin P0.0** is configurable via the PAF.0, PIT.0 and PIP.0 bits.	Dependent on external conditions.
	INT1	PAF.1/PIE.1	The **interrupt from pin P0.1** is configurable via the PAF.1, PIT.1 and PIP.1 bits.	Dependent on external conditions.
	SCI	MSCI	The **serial connect interrupt** is generated when all serial lines become high.	Every time all lines are high after any of them were low.
	SDI	MSDI	The **serial disconnect interrupt** is generated when all serial lines are low for at least 220ms.	Once every 220ms if all serial lines are held low. The first interrupt may take up to 440ms from the time all lines go low. Interrupt will not trigger if the ADC is off.
	SNDI	MSNDI	The **serial not disconnected interrupt** is generated when only one serial line goes high.	Every time any line goes high after all of them were low.
	CCI	MCCI	The **charger connection interrupt** is generated when V_{PLS} increases above V_{IN} and creates a charger detection condition.	Each time the charger detection condition evaluates to true after it was false.
Brown-Out Detector	BOI	MBOI	The **brown-out interrupt** indicates that V_{DD} was below V_{BO} in the past. It will not terminate the microcontroller's stop mode. It will interrupt the microcontroller, if MBOI is 1, after a charger brings V_{DD} above V_{BO} and causes the microcontroller to run.	Every time after exiting brown-out.
Protection Logic	BEI	MBEI	The **battery event interrupt** is an interrupt for a collection of events that initiate the various battery conditions that are handled by the protection logic: overvoltage, undervoltage, charge overcurrent, discharge overcurrent and short-circuit. The battery conditions are available as flags in the MAS register of module 0.	Each entry into a protection violation.
A/D Converter	VI	MVI	The **voltage interrupt** indicates the voltage register in the data peripheral memory block has a fresh voltage average.	Once every 6.9ms. Never if the ADC is off.
	CI	MCI	The **current interrupt** indicates that the quick average current register in the data peripheral memory block has a fresh reading and that the ACR has also been updated.	Once every 88ms. Never if the ADC is off.
	TI	MTI	The **temperature interrupt** indicates that the temperature register in the data peripheral memory block has a fresh average.	Once every 220ms. Never if the ADC is off.
Timer/ Counter	TCI	MTCI	The **timer/counter interrupt** indicates that the timer/counter has been reloaded after reaching its end-count.	Dependent on TMOD and TTCK[1:0].

I/O PORTS

The DS2790 includes a simple input/output (I/O) data port. From a software perspective, the port appears as a group of Special Function Registers within module M0. The simple I/O port defined for this product is described below:

- CMOS input buffers
- Four open drain output drivers with selectable tri-state or weak pullups
- Two selectable open drain or push-pull output drivers with selectable tri-state
- Support alternate functions and TAP controller interface signals
- Two pins have interrupt capability

The port is accessed through five peripheral registers (PO, PI, PAF, PPU, and EIC) addressed either by byte or by individual bit locations. The I/O port is designed to provide programming flexibility for the application. All individual I/O pins are independently configured; and can be defined as an input, output, or alternate function. Table 7 summarizes the functionality of the I/O pins.

Table 7. I/O Port Pins

FUNCTIONS			CHARACTERISTICS			
Primary	Alternate	TAP*	Bidirectional	Weak Passive Pulldown	Weak Active Pullup	Strong Active Pullup
P0.0	INT0	TDI*	Configurable, [In]	-	Configurable, [Off]	-
P0.1	INT1	TMS*	Configurable, [In]	-	Configurable, [Off]	-
P0.2	$\overline{RST}$*		Configurable, [In]	-	Configurable, [Off]	-
P0.3	-	TCK*	Configurable, [In]	-	Configurable, [Off]	-
P0.4	-	TDO*	Configurable, [In]	-	-	Configurable, [Off]
P0.5	-	-	Configurable, [In]	-	-	Configurable, [Off]
SDA	-	-	Yes	Configurable, [On]	Configurable, [Off]	-
SCL	-	-	Yes	Configurable, [On]	Configurable, [Off]	-

Note: Reset values are denoted with an * and by [].

PI register: The PI register is a read only input of the I/O pins. When the register is read, the logic level of each pin is reported in the corresponding bit locations. Reading a logic low or high on a pin does not change the output drive on that pin.

PO register: The PO register controls the output state of the I/O pins. Data written to this register determines the pin output drive. When a bit is written to a "0" (cleared), the N-channel output drive transistor is enabled, and the pullup is disabled. When bit is written to a "1" (set), the N-channel output drive transistor is disabled, and the pullup enabled (if so configured). The PO bits are set asynchronously during power-on reset to disable the N-channel output drive. PO bits are not altered in SLEEP mode, however drive to the N-channel is disabled.

PPU register: The PPU register contains independent bits that define each pin as hi-Z or pulled up when its N-channel output drive transistor is disabled. P0.0 through P0.3 have weak pullups, P0.4 and P0.5 have strong pullups. When the output is disabled and the PPU bit is cleared, the pin is high impedance. When the output is disabled and the PPU bit is set, the pin's weak or strong pullup is enabled. When the PPU bit is set and the device enters STOP mode, the weak pullup remains enabled.

PAF register: The PAF register enables or disables the alternate functions of P0.0-P0.2. When a pin's PAF bit is cleared, the pin is controlled by the PI, PO, PPU, and EIC registers. When the PAF bit is set, the pin operates in its alternate function mode. The $\overline{RST}$ function of P0.2 can be disabled by writing the RSTD bit to 1.

EIC register: The lower six bits of the EIC register are the Port Interrupt Control bits. The Port Interrupt Control bits are used to enable and configure detection of external interrupts. Interrupt enable bits, PIE.0 and PIE.1, enable detection of an interrupt on pins P0.0 and P0.1 respectively. Interrupt type bits, PIT.0 and PIT.1, define the type (level or edge) of interrupt on pins P0.0 and P0.1 respectively. Interrupt polarity bits, PIP.0 and PIP.1, determine the interrupt polarity on pins P0.0 and P0.1, respectively.

Table 8. P0 Interrupt Configuration

PIE.x	PIT.x	PIP.x	RESULT
0	X	X	Interrupt Disabled
1	0	0	Interrupt Enabled, Triggered on Logic Low
1	0	1	Interrupt Enabled, Triggered on Logic High
1	1	0	Interrupt Enabled, Triggered on Falling Edge
1	1	1	Interrupt Enabled, Triggered on Rising Edge

Figure 7. Port Pin Schematics

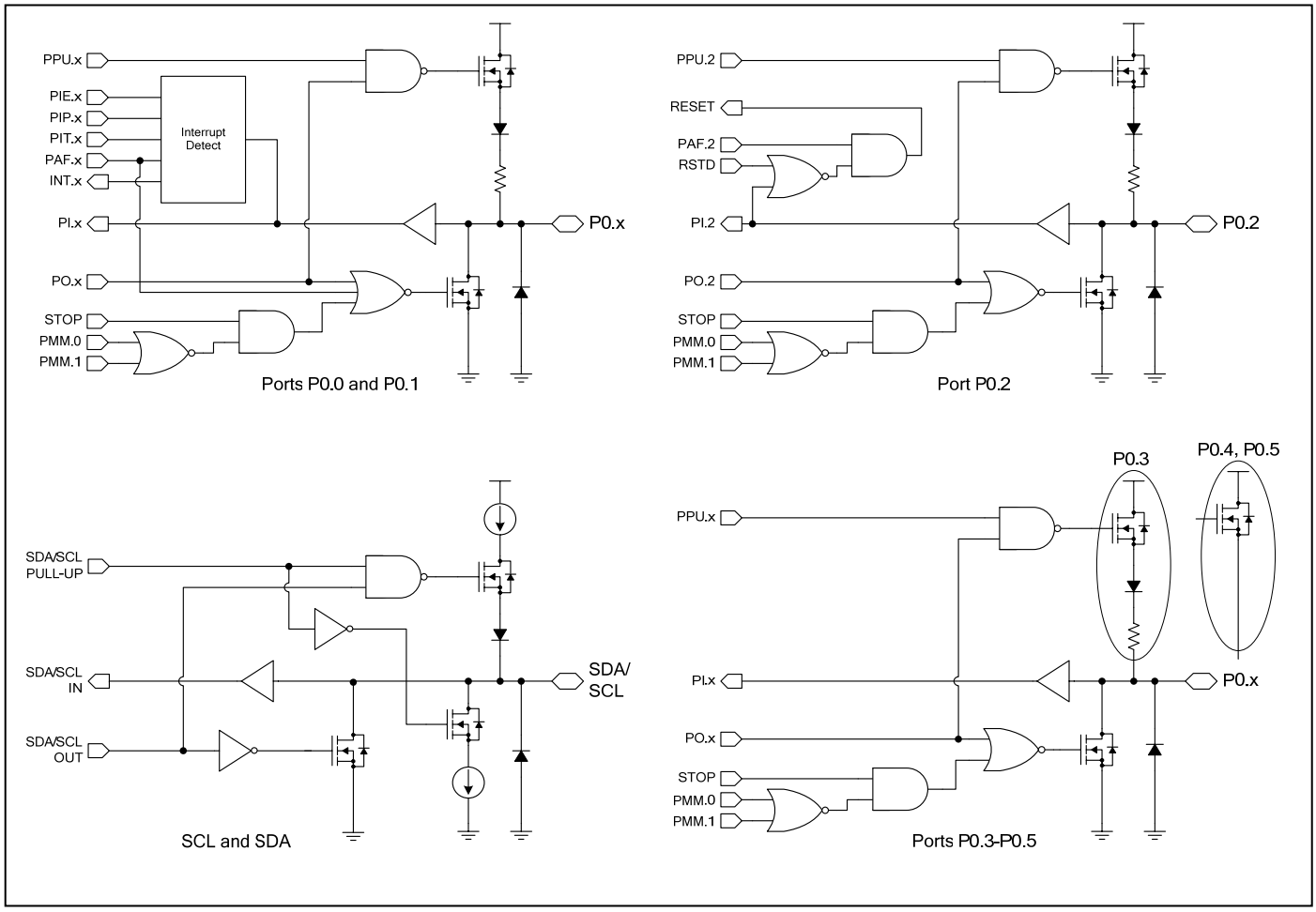

PROGRAMMABLE TIMER/COUNTER

The Timer/Counter block operates as a simple 8-bit interval timer or counter. The start value is programmable and is automatically reloaded when a rollover occurs. The TMOD bit in the TCC register selects between the counter and timer modes. In the counter mode, external events on the P0.3 pin are counted. In the timer mode, OSCA clock source cycles are counted. The OSCA clock and brown-out detectors continue to run if the CPU is stopped.

Figure 8. Timer / Counter Block Diagram

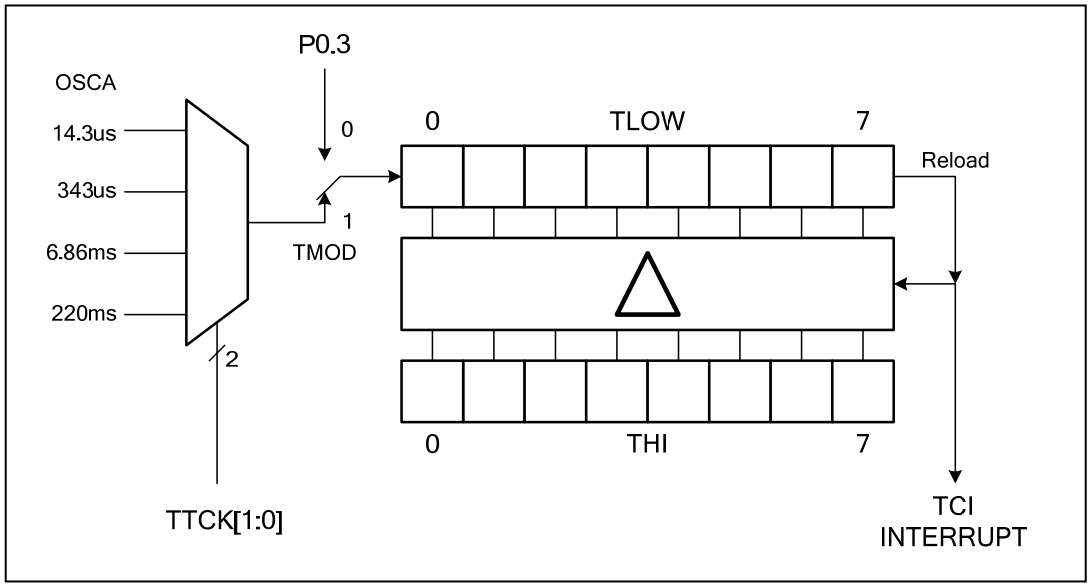

The timer low byte (TLOW) is used to count input events, while the timer high byte (THI) is used to store the reload value. Firmware must initialize TLOW and THI with the same value for the first count to be the same as succeeding counts. TLOW counts up until FFh is reached, it is then automatically reloaded with the value in THI. THI remains unchanged unless modified by firmware. The clock source is selected with TTCK[1:0] bits. The following table describes the possible resolution and range of the timer.

Table 9. Programmable Timer Configuration

TMOD	TTCK[1:0]	CLOCK PERIOD	TIMER RANGE ($t * 2^8$)
1	0 0	14.3µs	3.66ms
1	0 1	343µs	87.9ms
1	1 0	6.86ms	1.76s
1	1 1	220ms	56.3s
0	N/A	Counter Mode	

2-WIRE SLAVE PERIPHERAL INTERFACE MODULE

A 2-wire serial-peripheral interface for interconnection with external devices is incorporated into the DS2790. The 2-Wire Slave (TWS) peripheral allows interrupt driven I^2C or SMBus device communication with a minimal amount of CPU overhead. A Transmit/Recieve Data register (TWSTXD/RXD) handles byte level data transfers and the TWS FIFO register (TWSFIF) monitors the usage of the transmit and receive buffers. The 2-Wire Slave Command register (TWSCMD) maintains the command byte of every communication sequence for use by the MAXQ20 core.

Configuration of the 2-wire interface is handled through the TWS Configuration register (TWSCFG) allowing system software to change the DS2790's slave address, control handshaking on the clock line, and control bus timeout settings. The asynchronous interface between the TWS and MAXQ20 core is handled by TWS generated interrupts reported in the Interrupt register (TWSINT) and controlled in Interrupt Mask Register (TWSIM).

Figure 9. 2-Wire Slave Configuration Register (TWSCFG)

FIELD	BIT	FORMAT	ALLOWABLE VALUES
ADDR	15:9	R/W	2-Wire Slave Address. Default = 0001011b
reserved	8:5	R	Reserved bits read as 0000b
TOUT_LONG	4	R/W	Lengthen Timeouts. Only valid if $T_{TIMEOUT}$ or $T_{LOW:SEXT}$ timout is enabled. 0 = $T_{LOW:SEXT}$ – Nominal 15ms $T_{TIMEOUT}$ – Nominal 30ms 1 = $T_{LOW:SEXT}$ – Nominal 60ms $T_{TIMEOUT}$ – Nominal 120ms
TLS_DIS	3	R/W	$T_{LOW:SEXT}$ Disable 0 = $T_{LOW:SEXT}$ timeout is enabled 1 = $T_{LOW:SEXT}$ timeout is disabled
TTO_DIS	2	R/W	$T_{TIMEOUT}$ Disable 0 = $T_{TIMEOUT}$ is enabled 1 = $T_{TIMEOUT}$ is disabled
CMD_HM	1	R/W	Only valid if CMD_HS_DIS = 0. 0 = (CE) Clock Extend until command register release latch is cleared or clock extend timeout. 1 = (NACK) Nack the command byte if command register release latch is clear.
CMD_HM_DIS	0	R/W	Command Handshake Mode Disable. 0 = Command Handshake Mode is enabled. 1 = Command unconditionally accepted.

Note: The peripheral handles clock extension and Ack/Nack generation without intervention from the MAXQ20 core. Bus timeout conditions detailed in the 2-Wire Specification, $T_{TIMEOUT}$ and $T_{LOW:SEXT}$, are also handled directly by the TWS hardware.

Command Register and Handshaking

During a write, the first byte after the slave address is the command byte. The command byte signifies how the data following the command byte should be interpreted. It is useful for software to have access to this command byte during the entire 2-wire transaction. Therefore, the command byte is stored in the Command Register (TWSCMD) and handshaking between the 2-wire master and CPU is implemented to ensure that the command byte has been processed by the CPU before a new command byte can be received. Handshaking is configured in the 2-wire Configuration Register (TWSCFG); and the following handshaking modes can be implemented:

- CMD_HM_DIS=1, CMD_HM=X Handshaking disabled. All new command bytes are unconditionally written to the TWSCMD register and acknowledged (ACK) by the 2-wire hardware.

- CMD_HM_DIS=0, CMD_HM=0 Upon receipt of a new command byte, the TWSCMD register becomes “busy”. The TWSCMD register will remain busy and can not accept a new command byte until the CPU executes a “dummy” write to the TWSCMD register. The dummy write clears the busy state of the TWSCMD register so that it can accept a new command byte. If the master attempts to send additional command bytes while the TWSCMD register is busy, the 2-wire hardware will begin clock extending; which will continue until the CPU executes a dummy write to the TWSCMD register or the SMBus timeout limits are reached (if enabled).

- CMD_HM_DIS=0, CMD_HM=1 In this mode, If the master attempts to send additional command bytes while the TWSCMD register is busy, the 2-wire hardware will not acknowledge (NACK) the command byte. The master can re-attempt to send the command byte until it is ACK’ed.

2-Wire Slave Interrupts

An interrupt is generated when any condition that sets an interrupt status register bit occurs, and the corresponding interrupt mask bit in the 2-Wire Slave Interrupt Mask Register (TWSIM) is also set. All 2-wire interrupts are maskable by clearing the corresponding bit in the TWSIM. Upon system reset, all 2-wire interrupt mask bits are cleared automatically. The interrupt status register is 2 bytes in length and is readable and writeable by the MAXQ20 core.

Like the high level interrupt status register in the core, when the TWSINT register is read, the state of the interrupt status bits are returned but not altered. Edge triggered interrupt status bits are cleared by writing a '0' to their location. Any attempt to write a '1' is ignored. Level triggered interrupt status bits are cleared automatically after the event that caused the interrupt to occur has ended.

Table 10. 2-Wire Slave Interrupt Sources

INTERRUPT (TWSINT)	MASK (TWSIM)	DESCRIPTION	TRIGGER
RXD_FULL	RXD_FULL_MASK	When the RXD FIFO is full.	Level
RXD_EMPTY	RXD_EMPTY _MASK	RXD buffer is empty.	Edge
RXD_BYTE	RXD_BYTE_MASK	Byte moved from the incoming shift register to the RXD FIFO.	Edge
RXD_CMD	RXD_CMD_MASK	Command byte receive completed.	Edge
TXD_FULL	TXD_FULL_MASK	TXD buffer is full.	Edge
TXD_EMPTY	TXD_EMPTY _MASK	When the TXD FIFO is empty.	Level
TXD_BYTE	TXD_BYTE_MASK	Byte moved from TXD FIFO to the outgoing shift register.	Edge
START	START_MASK	A start followed by the address defined in the configuration register was recognized. (This bit is not set during a repeated start condition.)	Edge
RESTART _WRITE	RESTART_WRITE _MASK	A repeated start followed by the address defined in the configuration register was received with the read/write bit clear.	Edge
RESTART _READ	RESTART_READ _MASK	A repeated start followed by the address defined in the configuration register was received with the read/write bit set.	Edge
STOP	STOP_MASK	After an address qualified Start or Restart, a STOP is recognized on the bus.	Edge
TIMEOUT	TIMEOUT_MASK	$T_{TIMEOUT}$ or $T_{LOW:SEXT}$ event recognized on the bus. Either timeout event will reset the TWS interface.	Edge

Transmit and Receive Data Buffers

Since multiple data bytes can be associated with a single command byte, the TWS is designed with transmit and receive buffers to prevent data loss and reduce CPU overhead during a communication sequence. Data received from the master is directed to an 8 byte deep receive first in, first out buffer (RXD FIFO) until read by the CPU. Data to be transmitted by the DS2790 is stored in a separate 8-byte transmit FIFO buffer (TXD FIFO) until the master reads it. If the RXD FIFO buffer becomes completely full or the TXD FIFO buffer becomes completely empty during communication, the interface will begin clock extending the bus to maintain data integrity.

The CPU has access to the TXD and RXD FIFOs through the Transmit/Receive Data register (TWSTXD/RXD). During a master read (TWS transmit) data is pushed onto the TXD FIFO by writing to the TWSTXD/RXD register. Likewise, during a master write (TWS receive), the CPU can pull data off the RXD FIFO by reading the TWSTXD/RXD register.

Both the TXD and RXD FIFOs are flushed when a new command byte is accepted (command handshaking is enabled and the TWSCMD register is not busy, or when command handshaking is disabled). In the TWS FIFO register (TWSFIF), LRX[3:0] reports the number of received bytes waiting in the RXD FIFO and LTX[3:0] reports the number of bytes in the TXD FIFO to be transmitted.

Timeouts and Clock Extending

Clock extending during a DS2790 receive event (master write), is applied to delay the rising edge of SCL just before the ACK symbols after the command byte is sent, and to any ACK symbols thereafter. If the RXD FIFO is full, the clock low time just prior to the ACK symbol will be extended until a timeout occurs or the RXD FIFO has been read and is no longer full.

Clock extending during a DS2790 transmit event (master read), is applied to delay the rising edge of SCL just after the ACK symbol following the address, and to any ACK symbols thereafter. If the TXD FIFO is empty, the clock low time just after the ACK symbol will be extended until a timeout occurs or the TXD FIFO has been written and is no longer empty.

The $T_{TIMEOUT}$ and $T_{LOW:SEXT}$ timers analyze the 2-Wire bus for timeout conditions, and can cause the TWS to reset its internal state machine. These timers allow the bus to remain available even after bus fault conditions such as device hot swapping. Without the timers, such scenarios could result in a bus lock-up preventing all further communication. The $T_{TIMEOUT}$ timer begins counting on the falling edge of clock, and is reset on the rising edge of clock. If the timer ever reaches the $T_{TIMEOUT}$ value (nominal 30ms), the clock line is released, after a short delay the data line is also released. The $T_{LOW:SEXT}$ timer is reset whenever a START condition occurs on the bus. Specifically note that the timer is not reset during a REPEATED START condition. The timer counts while the TWS is holding the clock low. The timer does not count when a master or other slave device is holding the clock low. The timer is stopped on a STOP condition. If the timer times out (nominal 15ms), the clock line is released, followed by the data line.

The $T_{TIMEOUT}$ timer can be disabled using the TTO_DIS bit in the TWSCFG register, while $T_{LOW:SEXT}$ can be disabled using the TLS_DIS bit. The TOUT_LONG bit in the TWSCFG register allows the nominal value of the timeout conditions to be increased by a factor of four.

Command Codes

The DS2790 has two reserved command codes: a software power on reset (POR) of the IC, and an instruction to begin program loading over the 2-wire interface. Each command code is first enabled by transmitting the Command Enable (FEh) followed directly by a second sequence containing the command instruction. See Figure 10. There are no associated data bytes with either command. Any 2-wire communication between the two instructions negates the operation. See the *MAXQ Family User's Guide: DS2790 Supplement* for the 2-wire programming procedure. These command codes are fixed inside the DS2970 and cannot be altered. System firmware should avoid using FEh as a command code during during device operation.

Table 11. 2-Wire Interface Command Codes

COMMAND	HEX CODE	PURPOSE
Command Enable	FEh	Enable soft POR or program command.
Soft POR	Repeated FEh	Causes a reset of the part.
Request Programming	FDh	Initiates programming over 2-wire interface.
available	00h-FCh, FFh	Defined by application firmware.

Figure 10. 2-Wire Communication Examples

I²C/SMBus Write Data Sequence

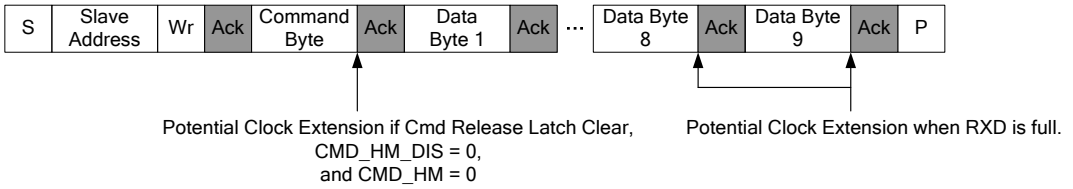

I²C/SMBus Read Data Sequence

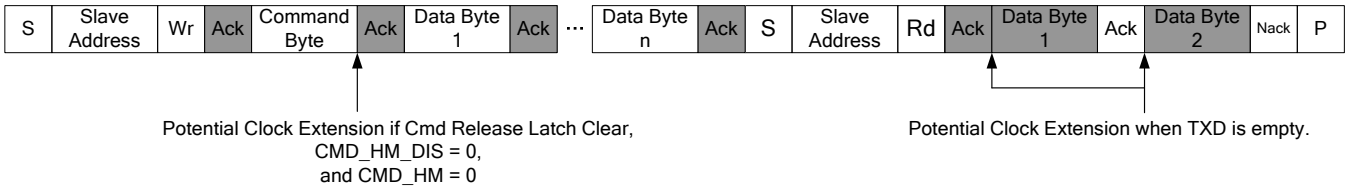

DS2790 Software POR Sequence

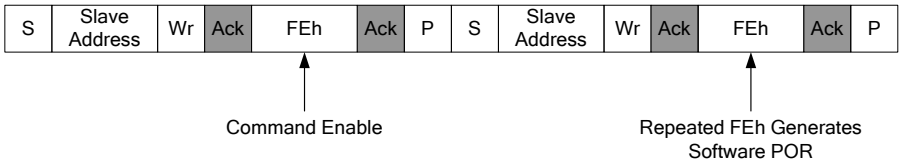

DS2790 2-Wire Programming Request

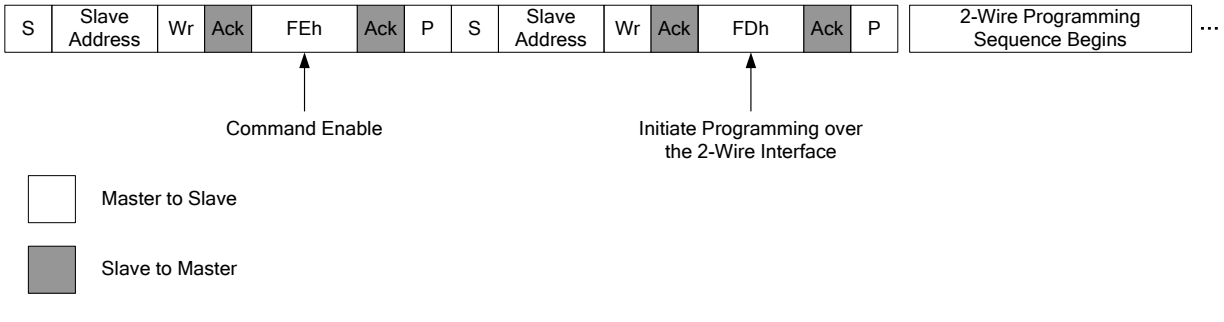

ANALOG-TO-DIGITAL CONVERSION

The DS2790 performs real-time measurements of system temperature, voltage, current, and accumulated current. The DS2790's analog-to-digital converter is controlled by an internal state machine that sequences the measurements, and stores the results in memory. The conversion results of the ADC are mapped into data memory starting at word address 6003h, as shown in table 12. Programs should read a measurement value as a word to ensure that the value does not change between instructions.

The DS2790 current measurement system is designed to provide timely data on charge and discharge current at a moderate resolution level while simultaneously accumulating high resolution average data to support accurate coulomb counting. Current is measured by sampling the voltage drop across a series sense resistor, R_{SNS}, connected between SNS1 and SNS2. Individual current samples are taken every $1/f_{SAMP}$ (687µs). All samples are averaged to report Current, Average Current, and Accumulated Current values.

The DS2790 measures voltage as a difference between the V_{IN} pin and analog ground pin AV_{SS}. Individual voltage samples are taken approximately every $1/f_{SAMP}$ (687µs). Multiple samples are averaged to update the Average Voltage register.

The DS2790 measures temperature directly on chip. Individual temperature samples are taken every $10/f_{SAMP}$ (6.87ms). Multiple samples are averaged to update the Average Temperature register.

Table 12. ADC Related Registers

WORD ADDRESS	ACCESS	DESCRIPTION
6003h	Read Only	Voltage Register
6004h	Read Only	Current Register
6005h	Read Only	Temperature Register
6006h	R/W	Accumulated Current Register
6007h	Read Only	Accumulated Current (Middle Word)
6008h	Read Only	Accumulated Current (Lower Word)
6009h	Read Only	Average Current Register
600Ah	R/W	ADC Configuration Register

Current Measurement

The voltage signal developed across the sense resistor (between SNS1 and SNS2) is differentially sampled by the ADC inputs via internal 10kΩ resistors connected between SNS1 and IS1, and SNS2 and IS2. Isolating the ADC inputs (IS1 and IS2 pins) from the sense resistor with 10kΩ facilitates the use of an RC filter by adding a single external capacitor. The RC filter extends the effective input range beyond ±64mV in pulse-load or pulse-charge applications. The ADC accurately measures large peak signals as long as the differential signal level at IS1 and IS2 does not exceed ±64mV.

The Current register reports the average of 128 individual current samples every 88ms. The reported value represents the average current during the 88ms measurement period. The Average Current register reports the average of 4096 current samples and is updated every 2.8s.

Figures 11 and 12 specify the update interval and units for the Current and Average Current registers. Values are posted in two's compliment format. Positive values represent charge currents ($V_{IS1} > V_{IS2}$) and negative values represent discharge currents ($V_{IS2} > V_{IS1}$). Positive currents above the maximum register value are reported at the maximum value, 7FFFh. Negative currents below the minimum register value are reported at the minimum value, 8000h.

Figure 11. Current Register Format

12-bit + sign resolution (13-bit), 88ms update interval

Word Address 6004h

S	2^{11}	2^{10}	2^9	2^8	2^7	2^6	2^5	2^4	2^3	2^2	2^1	2^0	X	X	X
MSb															LSb

"S": sign bit(s)

Units: $2^0 = 15.625\mu V/R_{sns}$

Figure 12. Average Current Register Format

15-bit + sign resolution (16-bit), 2.8s update interval

Word Address 6009h

S	2^{14}	2^{13}	2^{12}	2^{11}	2^{10}	2^9	2^8	2^7	2^6	2^5	2^4	2^3	2^2	2^1	2^0
MSb															LSb

"S": sign bit(s)

Units: $2^0 = 1.953\mu V/R_{SNS}$

Current Offset Correction

Continuous offset cancellation is performed automatically to correct for offsets in the current measurement system. Individual values reported by the Current register have a maximum offset of ±0.5 bits (±7.8125µV). Individual values reported in the Average Current register have a maximum offset of ±4 bits (±7.8125µV).

Current Accumulation

The DS2790 measures current for coulomb-counting purposes, with an accuracy of ±2% ±3.9µV over a range of ±64mV. Using a 15mΩ sense resistor, current accumulation is performed over a range of ±4.26A while measuring standby currents with an accuracy of ±195µA. Current measurements are internally summed, or accumulated, with the results displayed in the Accumulated Current Register (ACR). The accuracy of the ACR is dependent on both the current measurement and the accumulation timebase. The 16-bit ACR has a range of ±204.8mVh with a resolution of 6.25µVh. Accumulation of charge current above the maximum register value is reported at the maximum value; conversely, accumulation of discharge current below the minimum register value is reported at the minimum value. Read and write access is allowed to the ACR.

Figure 13. Accumulated Current Register Format

Word Address 6006h

S	2^{14}	2^{13}	2^{12}	2^{11}	2^{10}	2^9	2^8	2^7	2^6	2^5	2^4	2^3	2^2	2^1	2^0
MSb															LSb

"S": sign bit(s)

Units: $2^0 = 6.25\mu Vh/R_{SNS}$

The lower 32 bits of ACR resolution (bits 2^{-1} to 2^{-32}) can be read by firmware from address locations 6007h and 6008h respectively. Note that since the lower bits are from separate address words it cannot be guaranteed that they will contain data from the same measurement as the main ACR register at the time of reading. However, two consecutive reads from addresses 6006h–6008h that contain the same data esures that all data is from the same measurement. When the ACR register is written, the lower ACR bits are automatically cleared.

Accumulation Blanking

In order to avoid the accumulation of small positive offset errors over long periods, an offset blanking filter is provided. The blanking filter is enabled by setting the OBEN bit in the ADC Configuration Register. When OBEN is set, charge currents (positive values from the Current register) less than 62.5μV are not accumulated in the ACR. The minimum charge current accumulated in the ACR is 4.167mA for R_{SNS} = 0.015Ω.

Accumulation Bias

Systematic errors or an application preference can require the application of an arbitrary bias to the current accumulation process. The Accumulation Bias value sets a user programmed positive or negative bias to the current accumulation process. The accumulation bias value can be used to estimate battery currents that do not flow through the sense resistor, estimate battery self-discharge, or correct for offset error accumulated in the ACR register. The user programmed two's compliment value is added to the ACR once per current sample. The bias control is applied in 0.98μV increments over a ±125μV range. When using a 15mΩ sense resistor, the bias control can be adjusted in 65.3μA increments over a ±8.33mA range. The Accumulation Bias bit field is located in the upper byte of the ADC Configuration register.

Figure 14. Accumulation Bias Field

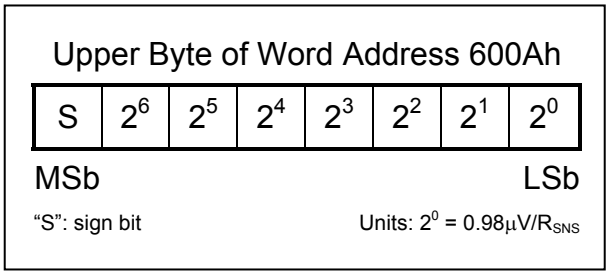

Voltage Measurement

The DS2790 continually measures the voltage between pins V_{IN} and AV_{SS} over a 0.0V to V_{FS} range, and the Voltage register is updated in two's-complement format every 3.4ms with a resolution of 4.88mV. Voltages above the maximum register value are reported as the maximum value.

Figure 15. Voltage Register Format

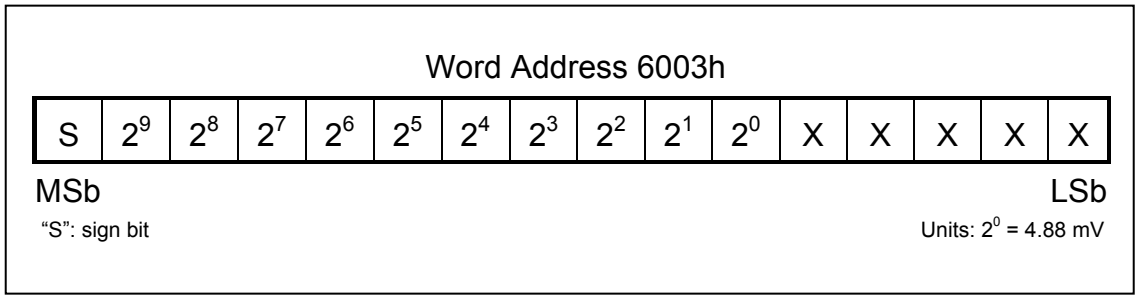

Temperature Measurement

The DS2790 uses an integrated temperature sensor to continually measure battery temperature. Temperature measurements are updated in the Temperature register every 220ms in two's-complement format with a resolution of 0.125°C over a ±127°C range. The Temperature register format is shown in Figure 16.

Figure 16. Temperature Register Format

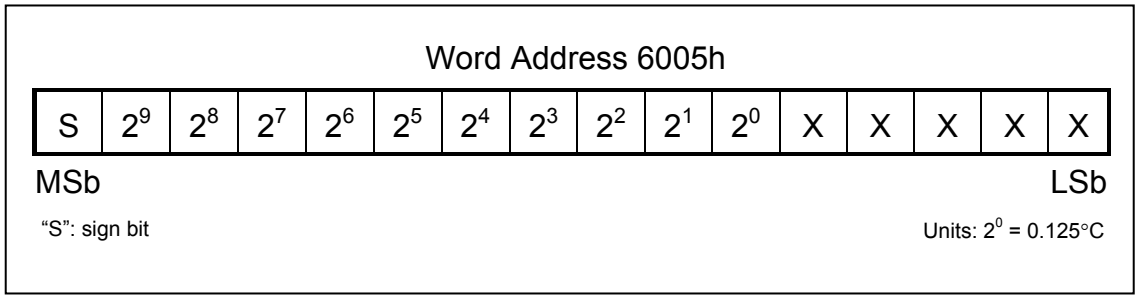

ADC Configuration Register

The ADC Configuration register located at word address 600Ah controls current measurement bias and offset blanking as well as current fault limits for the protector circuitry. ADC Configuration register bits are read and write accessable by application code. COCT, DOCT, and SCDT bit functionality is described under Lithium-Ion Protection.

Figure 17. ADC Configuration Register Format

ADDRESS	600AH		BIT DEFINITION
Field	Bit	Format	Allowable Values
IBIAS	15:8	R/W	Accumulation Register Bias 8-bit 2's complement value that is added to the ACR on every update.
COCT	7:6	R/W	Charge Overcurrent Threshold—See Lithium-Ion Protection. See V_{OC} in the specification table for limit tolerances. 0 0 = 16mV V_{OC} 0 1 = 32mV V_{OC} 1 0 = 48mV V_{OC} 1 1 = 64mV V_{OC}
DOCT	5:4	R/W	Discharge Overcurrent and Short Circuit Thresholds—See Lithium-Ion Protection. See V_{OC} and V_{SC} in the specification table for limit tolerances. 0 0 = 16mV V_{OC}, 100mV V_{SC} 0 1 = 32mV V_{OC}, 140mV V_{SC} 1 0 = 48mV V_{OC}, 180mV V_{SC} 1 1 = 64mV V_{OC}, 220mV V_{SC}
SCDT	3	R/W	Short Circuit Delay Time—See Lithium-Ion Protection. See t_{SCD} in the specification table for limit tolerances. 0 = 250µs 1 = 2.0ms
Reserved	2:1	Read Only	Undefined
OBEN	0	R/W	Offset Blanking Enable 0 = All current measurements accumulated into the ACR. 1 = Positive current measurements less than 62.5µV/R_{SNS} not accumulated into the ACR.

LITHIUM-ION PROTECTION

For safety, lithium-Ion cell protection functions are handled by a completely independent state machine. Application firmware can disable the protection FETs, but is not able to override the protector and enable the FETs. During active operation (CPU or Analog mode), the DS2790 constantly monitors cell voltage and current to protect the battery from overcharge (overvoltage), overdischarge (undervoltage), excessive charge and discharge currents (overcurrent, short circuit), and extreme temperatures (overtemperature, undertemperature). Protection conditions and DS2790 responses are described in the following sections and summarized in Table 13 and Figure 18.

Table 13. Lithium-Ion Protection Conditions and DS2790 Responses

CONDITION	ACTIVATION			RELEASE THRESHOLD
	THRESHOLD	DELAY	RESPONSE	
Overvoltage	$V_{IN} > V_{OV}$	t_{OVD}	CC Low	$V_{IN} < V_{CE}$, or $V_{IS} \le -2mV$
Undervoltage	$V_{IN} < V_{UV}$	t_{UVD}	CC Low, DC Low	$V_{PLS} > V_{IN} + 0.15V$ (1) (charger connected)
Overcurrent, Charge	$V_{IS} > V_{OC}$	t_{OCD}	CC Low, DC Low	$V_{PLS} < V_{DD} - V_{TP}$ (2)
Overcurrent, Discharge	$V_{IS} < -V_{OC}$	t_{OCD}	DC Low	$V_{PLS} > V_{DD} - V_{TP}$ (3)
Short Circuit	$V_{IS} > V_{SC}$	t_{SCD}	DC Low	$V_{PLS} > V_{DD} - V_{TP}$ (3)
Charge Overtemperature	$T_A > T_{CH}$ (4)		CC Low	$T_A \le T_{CH}$ (4)
Charge Undertemperature	$T_A \le T_{CL}$ (4)		CC Low	$T_A > T_{CL}$ (4)
Discharge Overtemperature	$T_A > T_{DH}$ (4)		DC Low	$T_A \le T_{DH}$ (4)
Discharge Undertemperature	$T_A \le T_{DL}$ (4)		DC Low	$T_A > T_{DL}$ (4)

$V_{IS} = V_{IS1} - V_{IS2}$. Off = V_{PLS} for CC and V_{DD} for DC. All voltages are with respect to V_{SS}. I_{SNS} references current delivered from pin SNS.

Under-/Overtemp conditions have no activation delay from the time the Temperature register updates. The temperature register result is an average over 220ms, this provides protection against the MOSFETs oscillating.

Note 1: If $V_{IN} < V_{UV}$, release is delayed until the recovery charge current (I_{RC}) charges the battery and allows V_{IN} to exceed V_{UV}.
Note 2: With test current I_{TST} flowing from PLS to V_{SS} (pulldown on PLS).
Note 3: With test current I_{TST} flowing from V_{DD} to PLS (pullup on PLS).
Note 4: Temperature faults must be enabled through the TLIME bit in password protected trim memory. Temperature fault thresholds are determined by the state of TLIM[1:0]. See Password Protected User Trim.

Overvoltage, OV. If the cell voltage on V_{IN} exceeds the overvoltage threshold, V_{OV}, for a period longer than overvoltage delay, t_{OVD}, the DS2790 shuts off the external charge FET and sets the OVF bit in the protection register. When the cell voltage falls below charge enable threshold V_{CE}, the DS2790 re-enables the charge FET (unless another protection condition prevents it). Discharging remains enabled during overvoltage, and the DS2790 re-enables the charge FET before $V_{IN} < V_{CE}$ if a discharge current of $V_{IS} \le -2mV$ is detected.

Undervoltage, UV. If the voltage of the cell drops below undervoltage threshold, V_{UV}, for a period longer than undervoltage delay, t_{UVD}, the DS2790 shuts off the charge and discharge FETs and sets the UVF bit in the protection register. The DS2790 provides a current-limited (I_{RC}) recovery charge path from PLS to V_{DD} to gently charge severely depleted cells. The recovery path is enabled when $0 \le V_{IN} < V_{CE}$. Once V_{IN} exceeds V_{UV} the DS2790 returns to normal operation.

Charge Overcurrent, COC. The voltage difference between the IS1 pin and the IS2 pin ($V_{IS} = V_{IS1} - V_{IS2}$) is the filtered voltage drop across the current-sense resistor. If V_{IS} exceeds overcurrent threshold V_{OC} for a period longer than overcurrent delay t_{OCD}, the DS2790 shuts off both external FETs and sets the COCF bit in the protection register. The charge current path is not re-established until the voltage on the PLS pin drops below $V_{DD} - V_{TP}$. The DS2790 provides a test current of value I_{TST} from PLS to V_{SS} to pull PLS down to detect the removal of the

offending charge current source. The Charge V_{OC} limit is programmable through the COCT bits in the ADC Configuration register.

Discharge Overcurrent, DOC. If V_{IS} is less than $-V_{OC}$ for a period longer than t_{OCD}, the DS2790 shuts off the external discharge FET and sets the DOCF bit in the protection register. The discharge current path is not re-established until the voltage on PLS rises above V_{DD} - V_{TP}. The DS2790 provides a test current of value I_{TST} from V_{DD} to PLS to pull PLS up to detect the removal of the offending low-impedance load. The Discharge V_{OC} limit is programmable through the DOCT bits of the ADC Configuration register.

Short Circuit, SC. If the voltage on the SNS2 pin with respect to SNS1 exceeds short-circuit threshold V_{SC1} for a period longer than short-circuit delay t_{SCD}, the DS2790 shuts off the external discharge FET and sets the SCF bit in the protection register. The discharge current path is not re-established until the voltage on PLS rises above V_{DD} - V_{TP}. The DS2790 provides a test current of value I_{TST} from V_{DD} to PLS to pull PLS up to detect the removal of the short circuit. The V_{SC} limit is programmable through the DOCT bits of the ADC Configuration register. The t_{SCD} limit is programmable through the SCDT bit of the ADC Configuration register. If a short circuit event collapses V_{DD}, a secondary short circuit protection function disables the discharge FET within a period of t_{SSCD}.

Charge/Discharge Over-/Undertemperature, DOT, DUT. Assuming no other fault conditions, the CC pin is enabled when the temperature is greather than T_{CH}, or less than or equal to T_{CL}. The DC pin is disabled when the temperature is greater than T_{DH}, or less than or equal to T_{DL}. When the temperature is inside these ranges, both control pins are enable. There is no hysteresis or delay period associated with temperature protection. Temperature protection must be enabled by user code by setting the TLIME bit. Over-/Undertemperature limits are defined by TLIM0 and TLIM1 bits located in password protected memory.

Figure 18. Lithium-Ion Protection Circuitry Example Waveforms

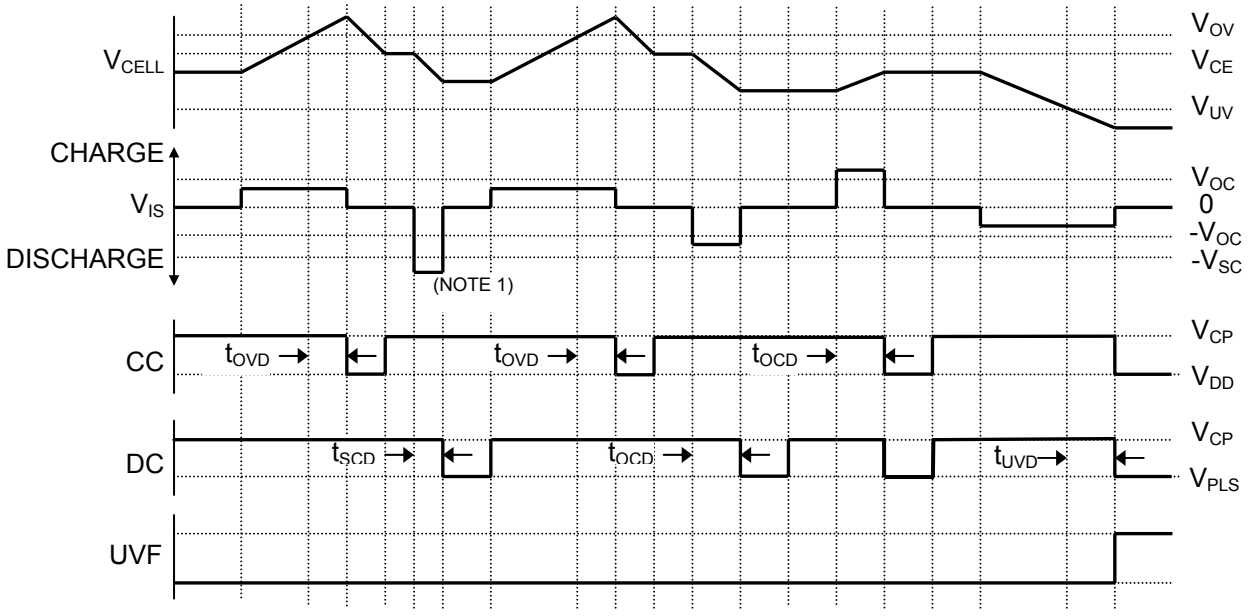

NOTE 1: TO ALLOW THE DEVICE TO REACT QUICKLY TO SHORT CIRCUITS, DETECTION OCCURS ON THE SNS PIN RATHER THAN ON THE FILTERED IS1 AND IS2 PINS. THE ACTUAL SHORT-CIRCUIT DETECT CONDITION IS V_{SNS2} - V_{SNS1} > V_{SC1}.

Summary. All of the protection conditions described above are AND'ed together with temperature protection functions to affect the CC and DC outputs.

DC = ($\overline{\text{Undervoltage}}$) and ($\overline{\text{Overcurrent}}$, Either Direction) and ($\overline{\text{Short Circuit}}$) and ($\overline{\text{Discharge Overtemperature}}$ if enabled) and ($\overline{\text{Discharge Undertemperature}}$ if enabled) and (DE = 1) and $\overline{\text{SLEEP}}$

CC = ($\overline{\text{Overvoltage}}$) and ($\overline{\text{Undervoltage}}$) and ($\overline{\text{Overcurrent}}$, Charge Direction) and ($\overline{\text{Charge Overtemperature}}$ if enabled) and ($\overline{\text{Charge Undertemperature}}$ if enabled) and (CE = 1) and $\overline{\text{SLEEP}}$

Protection Register

The Protection Register allows system software to determine if a protection fault condition has occurred and what triggered the protection fault. When a protection fault occurs, its corresponding protection flag is set. The flag will remain set until system software clears the bit after the fault is no longer present. System software can also disable charging or discharging by clearing the charge enable or discharge enable bits, or system software can completely disable the ADC and/or the protection FETs using the PMM bits. There is no way for system software to override a fault condition and enable the FETs.

Figure 19. Protection Register Format (PROT)

FIELD	BIT	FORMAT	DEFINITION
COCF	15	R/W	Charge Overcurrent Flag. Set to 1 by an COC fault condition. Can only be reset by system software after fault is corrected.
DOCF	14	R/W	Discharge Overcurrent Flag. Set to 1 by a DOC fault condition. Can only be reset by system software after fault is corrected.
SCF	13	R/W	Short Circuit Flag. Set to 1 by a SC fault condition. Can only be reset by system software after fault is corrected.
OVF	12	R/W	Overvoltage Flag. Set to 1 by an OV fault condition. Can only be reset by system software after fault is corrected.
UVF	11	R/W	Undervoltage Flag. Set to 1 by a UV fault condition. Can only be reset by system software after fault is corrected.
Reserved	10	Read Only	Undefined
CC	9	Read Only	CC Pin Mirror. This bit mirrors the state of the CC pin.
DC	8	Read Only	DC Pin Mirror. This bit mirrors the state of the DC pin.
Reserved	7:4	Read Only	Undefined
CE	3	R/W	Charge Enable. 0 = Charge FET is disabled. 1 = Charge FET is enabled unless disabled by fault. Writing this bit to 1 will not override a fault condition.
DE	2	R/W	Discharge Enable. 0 = Discharge FET is disabled. 1 = Discharge FET is enabled unless disabled by fault. Writing this bit to 1 will not override a fault condition.
PMM	1:0	R/W	Protection and Measurement Modes. 0 0 = ADC disabled, CC and DC low. 0 1 = ADC enabled, CC and DC low. 1 0 = ADC enabled, CC and DC low. 1 1 = ADC enabled, CC and DC high.

Adjusting Protection Thresholds

The protection thresholds are set in two locations. The Charge Overcurrent threshold, Discharge Overcurrent threshold, Short-Circuit Current threshold, and Short-Circuit Delay thresholds are set in the ADC Configuration Register location 600Ah. Values for Overvoltage, Undervoltage, and all temperature thresholds are stored in the password protected memory. See the *Password Protected User Trim* section.

High Side N-Channel Protection FETs

The DS2790 controls charging and discharging through external high-side N-FETs controlled through the CC and DC pins. An internal charge pump generates the voltage needed to drive the external FETs. An external capacitor connected between the CP and VSS pins stores the charge needed for the DS2790 to maintain the CC and DC outputs. To disable discharging, the DS2790 internally connects DC to V_{SS}. To disable charging, the DS2790 internally connects CC to V_{DD}. To enable charging or discharging, the DS2790 drives the appropriate FET gate to

V_{OCP} by internally pulling CC and DC up to the CP voltage. The system designer should consider the following when selecting external FETs:

- Gate to Source voltage. The external FETs must be able to withstand a voltage between their gate and source pins of at least the charge pump voltage V_{OCP} to prevent damage.
- Gate leakage. The gate leakage of both external FETs must be smaller than 0.9µA to ensure CC and DC meet the V_{OCP} specification.

PASSWORD PROTECTED USER TRIM

System software has the ability to change Temperature and Voltage protection levels, 2-wire slave address, and current measurement gain of the IC through the User Trim in Program EEPROM (Word Addresses 001Dh–001Fh). The user trim values are enabled through the Trim Key in the lower byte of address 001Dh. If the Trim Key is set to 76h, the user trim values replace the default trim values, if the Trim Key is set to any other value, default trim is selected. Note that either all user trim values are enabled or none are enabled. Figure 20 shows the format of all values that can be adjusted and their default trim values.

Figure 20. User Trim Registers

ADDRESS	**001Dh**		**BIT DEFINITION**
Field	Bit	Format	Allowable Values
Unused	15	R/W	Undefined—General purpose
Slave Address	14:8	R/W	2-Wire Slave Address Valid only if Trim Key = 76h Default = 0001011b
Trim Key	7:0	R/W	Trim Key Enables or disables all other user trim values. 76h = All User Trim values valid. Other = All User Trim values invalid. Default trim used.

ADDRESS	**001Eh**		**BIT DEFINITION**
Field	Bit	Format	Allowable Values
IG	15:8	R/W	Current Gain Trim These bits adjust the current gain by ±25%. The most significant bit is the 2's compliment sign bit, 1LSB = 0.195%. Example: A4h (-92d) adjusts the trim by -17.94%. Valid only if Trim Key = 76h Default = Factory trim value
SRTC	7:0	R/W	Sense Resistor Temperature Coefficient These bits adjust the current gain based on temperature of the sense resistor. 1LSB = 30.5ppm/ºC. Example: 1Ah (26d) adjusts current measurements for a sense resistor with a 793ppm/ºC temperature coefficient. Valid only if Trim Key = 76h Default = 00h

Address	**001Fh**		**Bit Definition**
Field	Bit	Format	Allowable Values
Unused	15:13	R/W	Undefined – General purpose
UVT	12:8	R/W	Undervoltage Threshold The Undervoltage threshold ranges from 2.30V to 2.90V and is calculated by the equation: V_{UV} = 2.90V – 0.0195V × UVT[4:0] Valid only if Trim Key = 76h Default = 17h (2.45V)
TLIME	7	R/W	Temperature Limit Enable 0 = Disables Lithium-Ion protection based on temperature. 1 = Enables temperature protection defined by TLIM[1:0] bits. Valid only if Trim Key = 76h Default = 0
TLIM	6:5	R/W	Temperature Limit Thresholds T_{CL} T_{CH} T_{DL} T_{DH} 0 0 = -3ºC 53ºC -23ºC 63ºC 0 1 = -3ºC 58ºC -23ºC 68ºC 1 0 = -23ºC 73ºC -23ºC 73ºC 1 1 = -43ºC 88ºC -43ºC 88ºC Valid only if Trim Key = 76h and TLIME = 1 Default = 0 0
OVT	4:0	R/W	Overvoltage Threshold The Overvoltage threshold ranges from 4.25V to 4.55V and is calculated by the equation: V_{OV} = 4.25V + 0.00977V × OVT[4:0] The enable threshold V_{CE} is always fixed at 0.1V below V_{OV}. Valid only if Trim Key = 76h Default = 0Ah (4.35V)

IN-CIRCUIT DEBUG

Embedded debugging capability is available through the JTAG-compatible Test Access Port. Embedded debug hardware and embedded ROM firmware provide in-circuit debugging capability to the user application, eliminating the need for an expensive in-circuit emulator. Figure 21 shows a block diagram of the in-circuit debugger. The in-circuit debug features include:

- a hardware debug engine,
- a set of registers able to set breakpoints on register, code, or data accesses (ICDA, ICDB, ICDC, ICDD, ICDF, ICDT0, and ICDT1)
- a set of debug service routines stored in the utility ROM.

Figure 21. In-Circuit Debugger

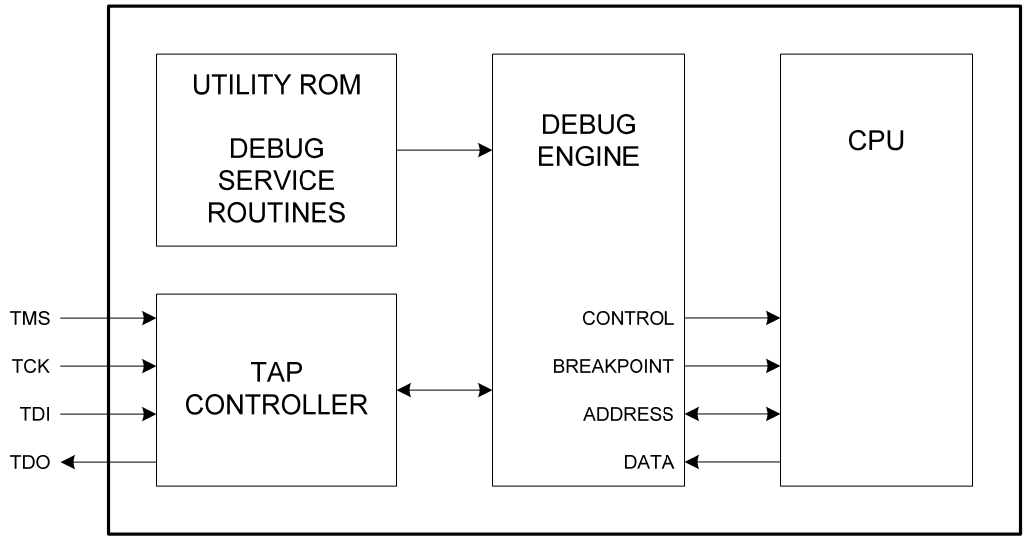

The embedded hardware debug engine is an independent hardware block in the microcontroller. The debug engine can monitor internal activities and interact with selected internal registers while the CPU is executing user code. Collectively, the hardware and software features allow two basic modes of in-circuit debugging:

- Background mode allows the host to configure and set up the in-circuit debugger while the CPU continues to execute the application software at full speed. Debug mode can be invoked from background mode.

- Debug mode allows the debug engine to take control of the CPU, providing read/write access to internal registers and memory, and single step trace operation.

APPLICATIONS

The low-power, high-performance RISC architecture of the DS2790 makes it an excellent fit for many portable or battery-powered applications that require cost-effective computing and analog measurement capability. The high-throughput core is programmable in-circuit over the 2-wire and JTAG interfaces, allowing for firmware upgrades, and ease of code development. Applications benefit from a wide range of peripheral interfaces, allowing the microcontroller to communicate with many external devices. With an integrated charge pump, high side N-FET drivers, ADC's capable of measuring cell voltage, and monitoring current. The DS2790's high level of integration reduces component count and board space, critical factors in the design of portable systems.

The DS2790 is ideally suited for applications such as fuel gauging, sensor conditioning, and data collection.

ADDITIONAL DOCUMENTATION

Designers must have four documents to fully use all the features of this device. This data sheet contains pin descriptions, feature overviews, and electrical specifications. Errata sheets contain deviations from published specifications. The user's guides offer detailed information about device features and operation. The following documents can be downloaded from www.maxim-ic.com/DS2790.

- The DS2790 data sheet, which contains electrical/timing specifications and pin descriptions, available at www.maxim-ic.com/DS2790.
- The DS2790 errata sheet, available at www.maxim-ic.com/errata.
- The *MAXQ Family User's Guide*, which contains detailed information on core features and operation, including programming at www.maxim-ic.com/products/microcontrollers/user_guides.cfm.
- The *MAXQ Family User's Guide: DS2790 Supplement*, which contains detailed information on features specific to the DS2790 at www.maxim-ic.com/DS2790UG.

DEVELOPMENT AND TECHNICAL SUPPORT

A variety of highly versatile, affordably priced development tools for this microcontroller are available from Maxim/Dallas Semiconductor and third-party suppliers, including:

- Compilers
- In-circuit emulators
- Integrated development environments (IDEs)
- Serial-to-JTAG converters for programming and debugging
- USB-to-JTAG converters for programming and debugging

Technical support is available through email at batterymanagement.support@dalsemi.com

PIN CONFIGURATION

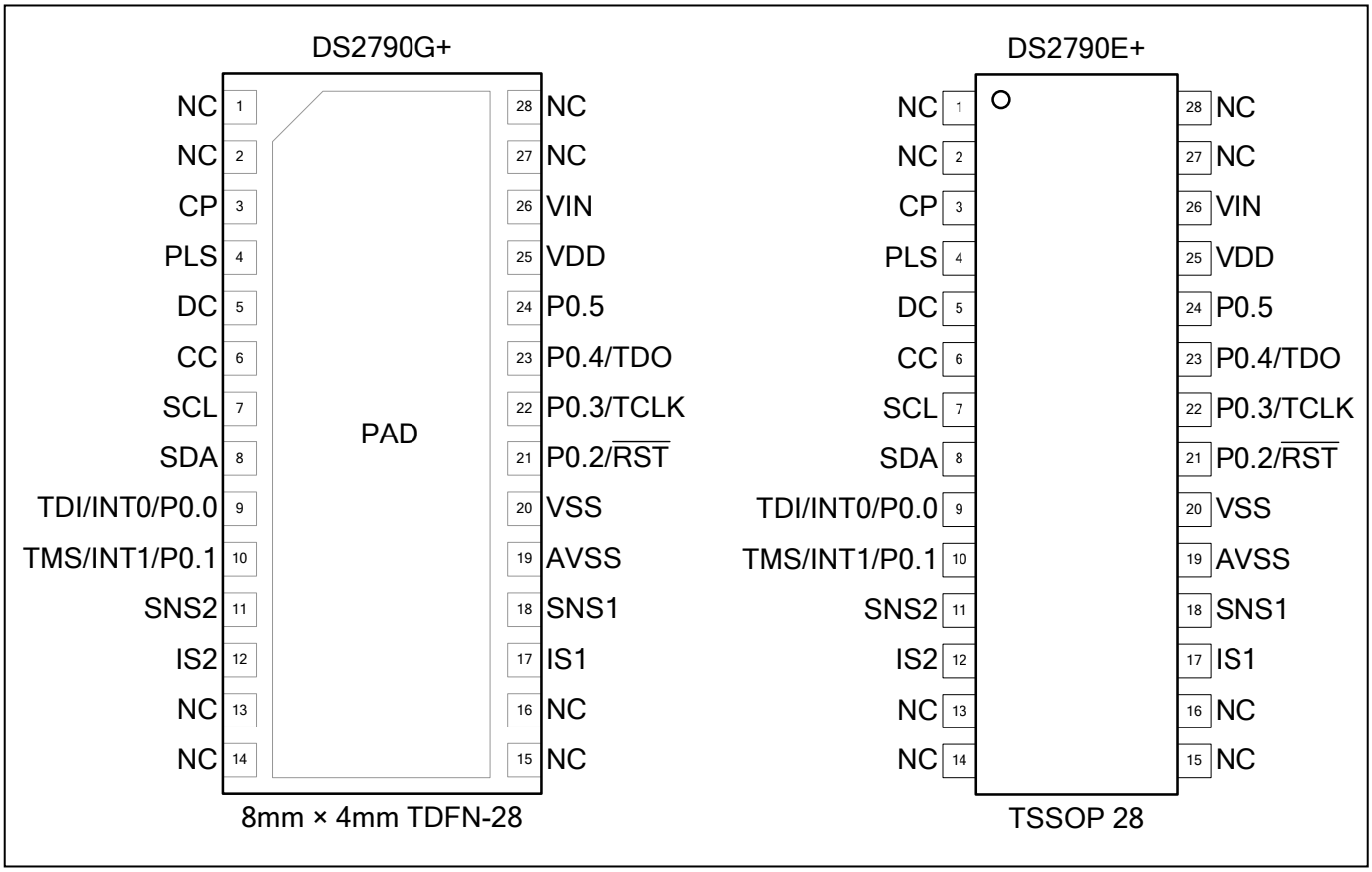

PACKAGE INFORMATION

(The package drawing(s) in this data sheet may not reflect the most current specifications. For the latest package outline information, go to **www.maxim-ic.com/DallasPackInfo**.)