National Semiconductor

January 1996

DS26LS32C/DS26LS32M/DS26LS32AC/DS26LS33C/ DS26LS33M/DS26LS33AC Quad Differential Line Receivers

General Description

The DS26LS32 and DS26LS32A are quad differential line receivers designed to meet the RS-422, RS-423 and Federal Standards 1020 and 1030 for balanced and unbalanced digital data transmission.

The DS26LS32 and DS26LS32A have an input sensitivity of 200 mV over the input voltage range of ±7V and the DS26LS33 and DS26LS33A have an input sensitivity of 500 mV over the input voltage range of ±15V.

Both the DS26LS32A and DS26LS33A differ in function from the popular DS26LS32 and DS26LS33 in that input pull-up and pull-down resistors are included which prevent output oscillation on unused channels.

Each version provides an enable and disable function common to all four receivers and features TRI-STATE® outputs with 8 mA sink capability. Constructed using low power Schottky processing, these devices are available over the full military and commerical operating temperature ranges.

Features

- High differential or common-mode input voltage ranges of ±7V on the DS26LS32 and DS26LS32A and ±15V on the DS26LS33 and DS26LS33A
- ±0.2V sensitivity over the input voltage range on the DS26LS32 and DS26LS32A, ±0.5V sensitivity on the DS26LS33 and DS26LS33A
- DS26LS32 and DS26LS32A meet all requirements of RS-422 and RS-423
- 6k minimum input impedance
- 100 mV input hysteresis on the DS26LS32 and DS26LS32A, 200 mV on the DS26LS33 and DS26LS33A
- Operation from a single 5V supply
- TRI-STATE outputs, with choice of complementary output enables for receiving directly onto a data bus

Logic Diagram

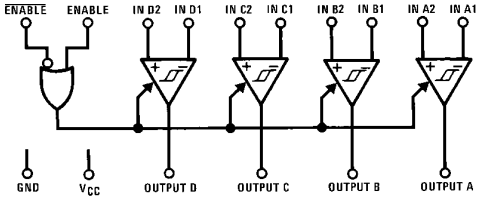

TL/F/5255–1

Connection Diagram

Dual-In-Line Package

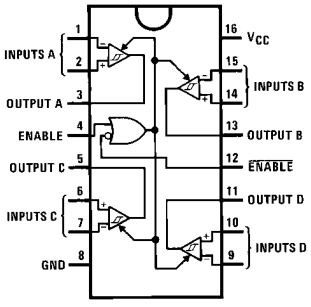

TL/F/5255–2

Top View

Truth Table

ENABLE	$\overline{\text{ENABLE}}$	Input	Output
0	1	X	Hi-Z
See Note Below		$V_{ID} \geq V_{TH}$ (Max)	1
		$V_{ID} \leq V_{TH}$ (Min)	0

HI-Z = TRI-STATE

Note: Input conditions may be any combination not defined for ENABLE and $\overline{\text{ENABLE}}$.

Order Number DS26LS32CM, DS26LS32CN, DS26LS32MJ, DS26LS32ACM, DS26LS32ACN, DS26LS33CN, DS26LS33MJ or DS26LS33ACN
See NS Package Number J16A, M16A or N16A

For Complete Military 883 Specifications, See RETS Data Sheet.

Order Number DS26LS32MJ/883, DS26LS32MW/883, DS26LS33MJ/883, DS26LS33MW/883
See NS Package Number J16A or W16A

TRI-STATE® is a registered trademark of National Semiconductor Corporation.

©1996 National Semiconductor Corporation

Absolute Maximum Ratings (Note 1)

If Military/Aerospace specified devices are required, please contact the National Semiconductor Sales Office/Distributors for availability and specifications.

Supply Voltage	7V
Common-Mode Range	±25V
Differential Input Voltage	±25V
Enable Voltage	7V
Output Sink Current	50 mA
Maximum Power Dissipation* at 25°C	
Cavity Package	1433 mW
Molded Dip Package	1362 mW
SO Package DS26LS32	1002 mW
DS26LS32A	1051 mW

*Derate cavity package 9.6 mW/°C above 25°C; derate molded DIP package 10.9 mW/°C above 25°C.

Derate SO Package 8.01 mW/°C for DS26LS32
8.41 mW/°C for DS26LS32A

Storage Temperature Range	−65°C to +165°C
Lead Temperature (Soldering, 4 seconds)	260°C

Operating Conditions

	Min	Max	Units
Supply Voltage, (V_{CC})			
DS26LS32M, DS26LS33M (MIL)	4.5	5.5	V
DS26LS32C, DS26LS33C DS26LS32AC, DS26LS33AC (COML)	4.75	5.25	V
Temperature, (T_A)			
DS26LS32M, DS26LS33M (MIL)	−55	+125	°C
DS26LS32C, DS26LS33C DS26LS32AC, DS26LS33AC (COML)	0	+70	°C

Electrical Characteristics over the operating temperature range unless otherwise specified (Notes 2, 3 and 4)

Symbol	Parameter	Conditions		Min	Typ	Max	Units
V_{TH}	Differential Input Voltage	$V_{OUT} = V_{OH}$ or V_{OL}	DS26LS32, DS26LS32A, $-7V \le V_{CM} \le +7V$	−0.2	±0.07	0.2	V
			DS26LS33, DS26LS33A, $-15V \le V_{CM} +15V$	−0.5	±0.14	0.5	V
R_{IN}	Input Resistance	$-15V \le V_{CM} \le +15V$ (One Input AC GND)		6.0	8.5		kΩ
I_{IN}	Input Current (Under Test)	$V_{IN} = 15V$, Other Input $-15V \le V_{IN} \le +15V$				2.3	mA
		$V_{IN} = -15V$, Other Input $-15V \le V_{IN} \le +15V$				−2.8	mA
V_{OH}	Output High Voltage	V_{CC} = MIN, $\Delta V_{IN} = 1V$, $V_{\overline{ENABLE}} = 0.8V$, $I_{OH} = -440\ \mu A$	Commercial	2.7	4.2		V
			Military	2.5	4.2		V
V_{OL}	Output Low Voltage	V_{CC} = Min, $\Delta V_{IN} = -1V$, $V_{\overline{ENABLE}} = 0.8V$	$I_{OL} = 4$ mA			0.4	V
			$I_{OL} = 8$ mA			0.45	V
V_{IL}	Enable Low Voltage					0.8	V
V_{IH}	Enable High Voltage			2.0			V
V_I	Enable Clamp Voltage	V_{CC} = Min, $I_{IN} = -18$ mA				−1.5	V
I_O	OFF-State (High Impedance) Output Current	V_{CC} = Max	$V_O = 2.4V$			20	μA
			$V_O = 0.4V$			−20	μA
I_{IL}	Enable Low Current	$V_{IN} = 0.4V$				−0.36	mA
I_{IH}	Enable High Current	$V_{IN} = 2.7V$				20	μA
I_{SC}	Output Short-Circuit Current	$V_O = 0V$, V_{CC} = Max, $\Delta V_{IN} = 1V$		−15		−85	mA
I_{CC}	Power Supply Current	V_{CC} = Max, All V_{IN} = GND, Outputs Disabled	DS26LS32, DS26LS32A		52	70	mA
			DS26LS33, DS26LS33A		57	80	mA
I_I	Input High Current	$V_{IN} = 5.5V$				100	μA
V_{HYST}	Input Hysteresis	$T_A = 25°C$, $V_{CC} = 5V$, $V_{CM} = 0V$	DS26LS32, DS26S32A		100		mV
			DS26LS33, DS26LS33A		200		mV

Note 1: "Absolute Maximum Ratings" are those values beyond which the safety of the device cannot be guaranteed. They are not meant to imply that the device should be operated at these limits. The table of "Electrical Characteristics" provides conditions for actual device operation.

Note 2: All currents into device pins are shown as positive, all currents out of device pins are shown as negative, all voltages are referenced to ground, unless otherwise specified. All values shown as max or min are so classified on absolute value basis.

Note 3: All typical values are $V_{CC} = 5V$, $T_A = 25°C$.

Note 4: Only one output at a time should be shorted.

Switching Characteristics $V_{CC} = 5V, T_A = 25°C$

Symbol	Parameter	Conditions	DS26LS32/DS26LS33			DS26LS32A/DS26LS33A			Units
			Min	Typ	Max	Min	Typ	Max	
t_{PLH}	Input to Output	$C_L = 15$ pF		17	25		23	35	ns
t_{PHL}				17	25		23	35	ns
t_{LZ}	ENABLE to Output	$C_L = 5$ pF		20	30		15	30	ns
t_{HZ}				15	22		20	25	ns
t_{ZL}	ENABLE to Output	$C_L = 15$ pF		15	22		14	22	ns
t_{ZH}				15	22		15	22	ns

AC Test Circuit and Switching Time Waveforms

Load Test Circuit for TRI-STATE Outputs

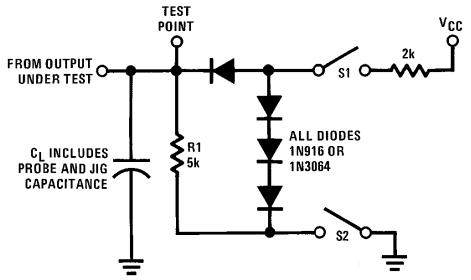

TL/F/5255–3

Propagation Delay (Notes 1 and 3)

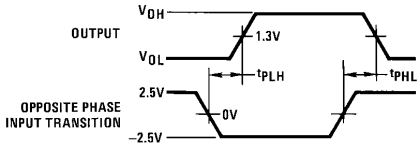

TL/F/5255–4

Enable and Disable Times (Notes 2 and 3)

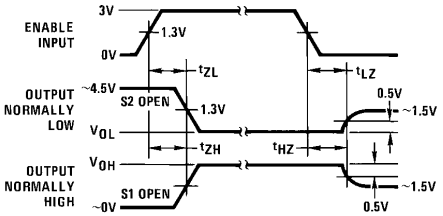

TL/F/5255–5

Note 1: Diagram shown for $\overline{\text{ENABLE}}$ low.

Note 2: S1 and S2 of load circuit are closed except where shown.

Note 3: Pulse generator for all pulses: Rate = 1.0 MHz; $Z_O = 50\Omega$; $t_r \leq 6$ ns; $t_f \leq 6.0$ ns.

Typical Applications

Two-Wire Balanced Interface—RS-422

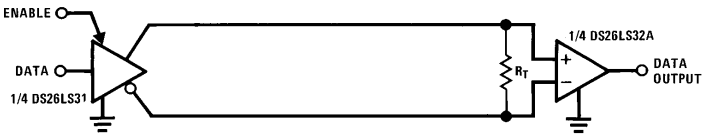

TL/F/5255–6

Single Wire with Driver Ground Reference—RS-423

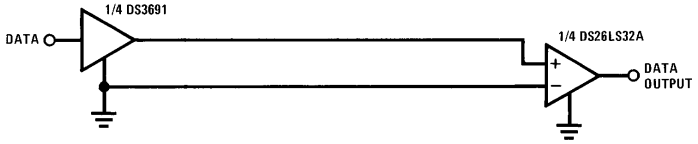

TL/F/5255–7

Physical Dimensions inches (millimeters)

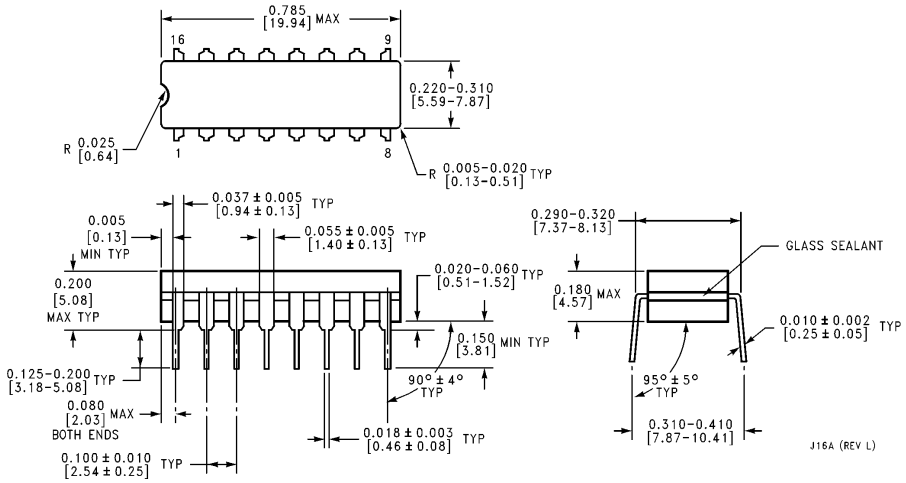

Ceramic Dual-In-Line Package (J)
Order Number DS26LS32MJ, DS26LS33MJ, DS26LS32MJ/883 or DS26LS33MJ/883
NS Package Number J16A

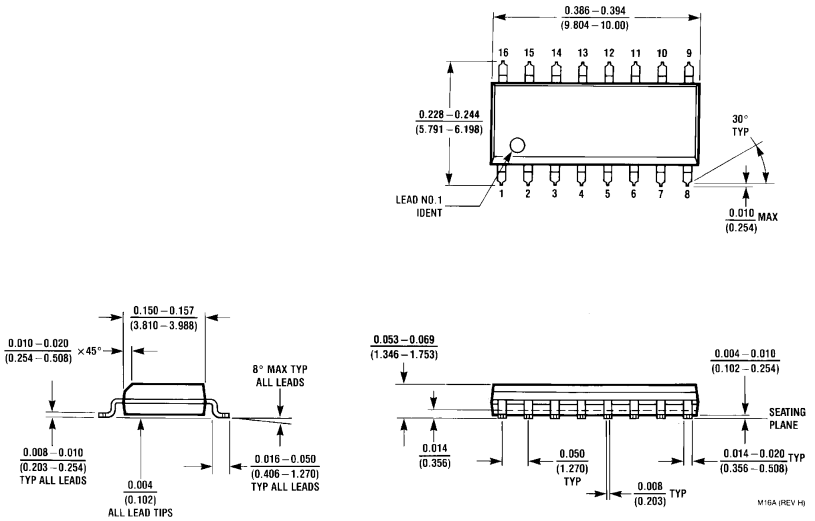

Small Outline Package (M)
Order Number DS26LS32CM or DS26LS32ACM
NS Package Number M16A

Physical Dimensions inches (millimeters) (Continued)

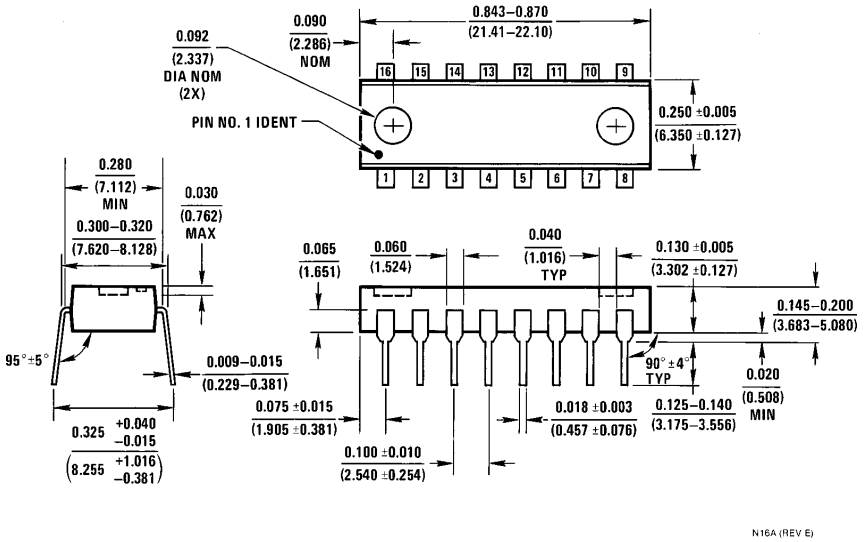

Molded Dual-In-Line Package (N)
Order Number DS26LS32CN, DS26LS32ACN, DS26LS33CN or DS26LS33ACN
NS Package Number N16A

Physical Dimensions inches (millimeters) (Continued)

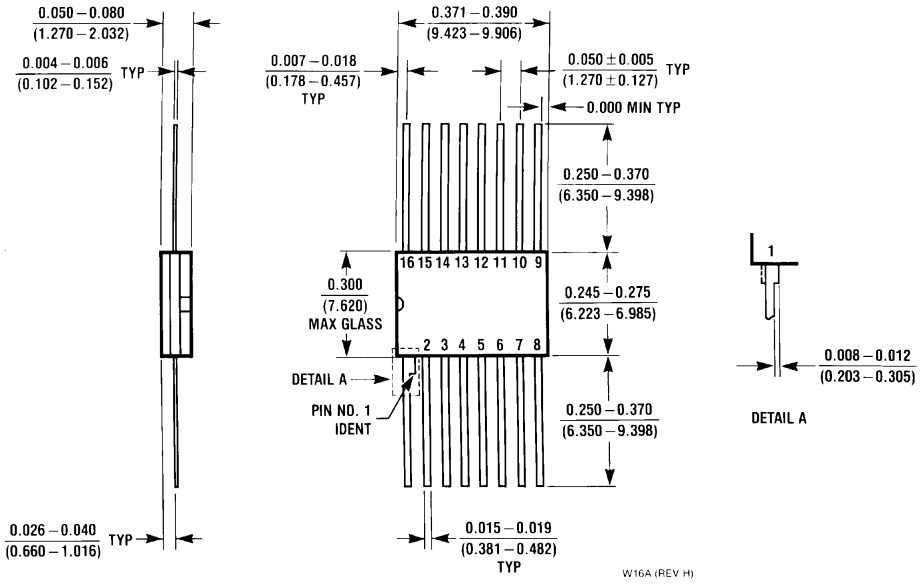

16 Lead Ceramic Flatpak (W)
Order Number DS26LS32MW/883 or DS26LS33MW/883
NS Package Number W16A

LIFE SUPPORT POLICY

NATIONAL'S PRODUCTS ARE NOT AUTHORIZED FOR USE AS CRITICAL COMPONENTS IN LIFE SUPPORT DEVICES OR SYSTEMS WITHOUT THE EXPRESS WRITTEN APPROVAL OF THE PRESIDENT OF NATIONAL SEMICONDUCTOR CORPORATION. As used herein:

1. Life support devices or systems are devices or systems which, (a) are intended for surgical implant into the body, or (b) support or sustain life, and whose failure to perform, when properly used in accordance with instructions for use provided in the labeling, can be reasonably expected to result in a significant injury to the user.
2. A critical component is any component of a life support device or system whose failure to perform can be reasonably expected to cause the failure of the life support device or system, or to affect its safety or effectiveness.

National Semiconductor Corporation
1111 West Bardin Road
Arlington, TX 76017
Tel: 1(800) 272-9959
Fax: 1(800) 737-7018

http://www.national.com

National Semiconductor Europe
Fax: +49 (0) 180-530 85 86
Email: europe.support@nsc.com
Deutsch Tel: +49 (0) 180-530 85 85
English Tel: +49 (0) 180-532 78 32
Français Tel: +49 (0) 180-532 93 58
Italiano Tel: +49 (0) 180-534 16 80

National Semiconductor Hong Kong Ltd.
13th Floor, Straight Block,
Ocean Centre, 5 Canton Rd.
Tsimshatsui, Kowloon
Hong Kong
Tel: (852) 2737-1600
Fax: (852) 2736-9960

National Semiconductor Japan Ltd.
Tel: 81-043-299-2308
Fax: 81-043-299-2408

National does not assume any responsibility for use of any circuitry described, no circuit patent licenses are implied and National reserves the right at any time without notice to change said circuitry and specifications.