DS250DF230 25-Gbps Multi-Rate 2-Channel Retimer

1 Features

- Dual-Channel Multi-Rate Retimer With Integrated Signal Conditioning
- All Channels Lock Independently From 19.6 to 25.8 Gbps (Including Sub-Rates, Such as 12.16512 Gbps, 9.8304 Gbps, 6.144 Gbps, and More)
- Ultra-Low Latency: <500 ps Typical for 25.78125-Gbps Data Rate
- Adaptive Continuous Time Linear Equalizer (CTLE)
- Continuous Adaptive Decision Feedback Equalizer (DFE) and Adaptation Algorithm, Capable to Compensate Large Channel Loss Variation Over Temperature
- Combined Equalization Supporting 35-dB Channel Loss at 12.9 GHz
- On-Chip Eye-Opening Monitor (EOM), PRBS Pattern Checker and Generator
- Low-Jitter Transmitter With 3-Tap FIR Filter
- Integrated 2×2 Cross-Point
- Recovered Clock Available for System Clock Synchronization Applications on Channel 0
- Single Power Supply, No Low-Jitter Reference Clock Required
- Wide Stay-In-Lock Temperature Range

2 Applications

- Jitter Cleaning for Front-Port Optical Interface in Wireless and Wired Systems
- Backplane/Mid-Plane Reach Extension
- Active Cable Assemblies
- 802.3bj 100GbE, InfiniBand EDR, and OIF-CEI-25G-LR/MR/SR/VSR Electrical Interfaces
- SFP28, QSFP28, CFP2/CFP4, CDFP

3 Description

The DS250DF230 is a dual-channel multi-rate retimer with integrated signal conditioning. The device is used to extend the reach and robustness of long, lossy, crosstalk-impaired high-speed serial links and while achieving a bit error rate (BER) of 10^{-15} or less.

Each channel of the DS250DF230 independently locks to serial data rates in a continuous range from 19.6 Gbps to 25.8 Gbps or to any supported sub-rate (÷2 and ÷4), including key data rates such as 12.16512 Gbps, 9.8304 Gbps, 6.144 Gbps.

Device Information(1)

PART NUMBER	PACKAGE	BODY SIZE (NOM)
DS250DF230	NFBGA (36)	5.00 mm × 5.00 mm

(1) For all available packages, see the orderable addendum at the end of the data sheet.

ADVANCE INFORMATION

Simplified Schematic

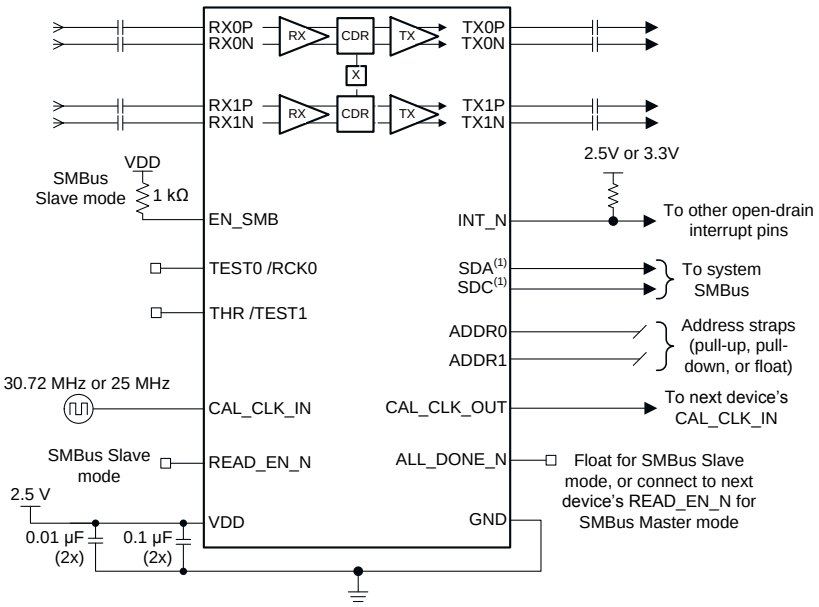

(1) SMBus signals need to be pulled up elsewhere in the system.

An IMPORTANT NOTICE at the end of this data sheet addresses availability, warranty, changes, use in safety-critical applications, intellectual property matters and other important disclaimers. ADVANCE INFORMATION for pre-production products; subject to change without notice.

Table of Contents

1 Features 1
2 Applications 1
3 Description 1
4 Revision History 2
5 Description (continued) 3
6 Device and Documentation Support 4
6.1 Device Support 4
6.2 Documentation Support 4
6.3 Receiving Notification of Documentation Updates 4
6.4 Community Resources 4
6.5 Trademarks 4
6.6 Electrostatic Discharge Caution 4
6.7 Glossary 4
7 Mechanical, Packaging, and Orderable Information 4
7.1 Package Option Addendum 5

4 Revision History

NOTE: Page numbers for previous revisions may differ from page numbers in the current version.

DATE	REVISION	NOTES
August 2018	*	Initial release.

ADVANCE INFORMATION

Copyright © 2018, Texas Instruments Incorporated

5 Description (continued)

The DS250DF230 has a single power supply and minimal need for external components. These features reduce PCB routing complexity and BOM cost.

The advanced equalization features of the DS250DF230 include a low-jitter 3-tap transmit finite impulse response (FIR) filter, an adaptive continuous-time linear equalizer (CTLE), and an adaptive decision feedback equalizer (DFE). This enables reach extension for lossy interconnect and backplanes with multiple connectors and crosstalk. The integrated CDR function is available for front-port optical module applications to reset the jitter budget and retime the high-speed serial data. The DS250DF230 supplies 2x2 cross-point that gives the host lane crossing, fanout, and multiplexing options.

The DS250DF230 can be configured either through the SMBus or through an external EEPROM. Up to 16 devices can share an EEPROM using common-channel configuration. A non-disruptive on-chip eye monitor and a PRBS generator and checker is available for in-system diagnostics.

ADVANCE INFORMATION

Copyright © 2018, Texas Instruments Incorporated

6 Device and Documentation Support

6.1 Device Support

6.1.1 Development Support

For additional information, see TI's Surface Mount Technology (SMT) References at:

http://focus.ti.com/quality/docs under the *Quality & Lead (Pb)-Free Data* menu.

Click here to request access to the DS250DF230 IBIS Model (SNLM215) in the DS250DF230 MySecure folder.

6.2 Documentation Support

6.2.1 Related Documnetation

For related documentation, see the following:

- *DS250DF230EVM User's Guide* (SNLU238)
- *DS2x0DF810, DS250DFx10, DS250DF230 Programmer's Guide* (SNLU182)

Click here to request access to these documents in the DS250DF230 MySecure folder.

6.3 Receiving Notification of Documentation Updates

To receive notification of documentation updates, navigate to the device product folder on ti.com. In the upper right corner, click on *Alert me* to register and receive a weekly digest of any product information that has changed. For change details, review the revision history included in any revised document.

6.4 Community Resources

The following links connect to TI community resources. Linked contents are provided "AS IS" by the respective contributors. They do not constitute TI specifications and do not necessarily reflect TI's views; see TI's Terms of Use.

TI E2E™ Online Community ***TI's Engineer-to-Engineer (E2E) Community.*** Created to foster collaboration among engineers. At e2e.ti.com, you can ask questions, share knowledge, explore ideas and help solve problems with fellow engineers.

Design Support ***TI's Design Support*** Quickly find helpful E2E forums along with design support tools and contact information for technical support.

6.5 Trademarks

E2E is a trademark of Texas Instruments.
All other trademarks are the property of their respective owners.

6.6 Electrostatic Discharge Caution



These devices have limited built-in ESD protection. The leads should be shorted together or the device placed in conductive foam during storage or handling to prevent electrostatic damage to the MOS gates.

6.7 Glossary

SLYZ022 — *TI Glossary*.

This glossary lists and explains terms, acronyms, and definitions.

7 Mechanical, Packaging, and Orderable Information

The following pages include mechanical, packaging, and orderable information. This information is the most current data available for the designated devices. This data is subject to change without notice and revision of this document. For browser-based versions of this data sheet, refer to the left-hand navigation.

ADVANCE INFORMATION

Copyright © 2018, Texas Instruments Incorporated

7.1 Package Option Addendum

7.1.1 Packaging Information

Orderable Device	Status (1)	Package Type	Package Drawing	Pins	Package Qty	Eco Plan (2)	Lead/Ball Finish(3)	MSL Peak Temp (4)	Op Temp (°C)	Device Marking(5)(6)
DS250DF230ZLSR	PREVIEW	DSBGA	ZLS	36	3000	TBD	SNAGCU	TBD	-40 to 85	D250DF230
DS250DF230ZLST	PREVIEW	DSBGA	ZLS	36	250	TBD	SNAGCU	TBD	-40 to 85	D250DF230
PD250DF230ZLST	ACTIVE	DSBGA	ZLS	36	250	TBD	SNAGCU	TBD	-40 to 85	P250DF230

(1) The marketing status values are defined as follows:
ACTIVE: Product device recommended for new designs.
LIFEBUY: TI has announced that the device will be discontinued, and a lifetime-buy period is in effect.
NRND: Not recommended for new designs. Device is in production to support existing customers, but TI does not recommend using this part in a new design.
PRE_PROD Unannounced device, not in production, not available for mass market, nor on the web, samples not available.
PREVIEW: Device has been announced but is not in production. Samples may or may not be available.
OBSOLETE: TI has discontinued the production of the device.

(2) Eco Plan - The planned eco-friendly classification: Pb-Free (RoHS), Pb-Free (RoHS Exempt), or Green (RoHS & no Sb/Br) - please check http://www.ti.com/productcontent for the latest availability information and additional product content details.
TBD: The Pb-Free/Green conversion plan has not been defined.
Pb-Free (RoHS): TI's terms "Lead-Free" or "Pb-Free" mean semiconductor products that are compatible with the current RoHS requirements for all 6 substances, including the requirement that lead not exceed 0.1% by weight in homogeneous materials. Where designed to be soldered at high temperatures, TI Pb-Free products are suitable for use in specified lead-free processes.
Pb-Free (RoHS Exempt): This component has a RoHS exemption for either 1) lead-based flip-chip solder bumps used between the die and package, or 2) lead-based die adhesive used between the die and leadframe. The component is otherwise considered Pb-Free (RoHS compatible) as defined above.
Green (RoHS & no Sb/Br): TI defines "Green" to mean Pb-Free (RoHS compatible), and free of Bromine (Br) and Antimony (Sb) based flame retardants (Br or Sb do not exceed 0.1% by weight in homogeneous material)

(3) Lead/Ball Finish - Orderable Devices may have multiple material finish options. Finish options are separated by a vertical ruled line. Lead/Ball Finish values may wrap to two lines if the finish value exceeds the maximum column width.

(4) MSL, Peak Temp. -- The Moisture Sensitivity Level rating according to the JEDEC industry standard classifications, and peak solder temperature.

(5) There may be additional marking, which relates to the logo, the lot trace code information, or the environmental category on the device

(6) Multiple Device markings will be inside parentheses. Only one Device Marking contained in parentheses and separated by a "~" will appear on a device. If a line is indented then it is a continuation of the previous line and the two combined represent the entire Device Marking for that device.

Important Information and Disclaimer: The information provided on this page represents TI's knowledge and belief as of the date that it is provided. TI bases its knowledge and belief on information provided by third parties, and makes no representation or warranty as to the accuracy of such information. Efforts are underway to better integrate information from third parties. TI has taken and continues to take reasonable steps to provide representative and accurate information but may not have conducted destructive testing or chemical analysis on incoming materials and chemicals. TI and TI suppliers consider certain information to be proprietary, and thus CAS numbers and other limited information may not be available for release.

In no event shall TI's liability arising out of such information exceed the total purchase price of the TI part(s) at issue in this document sold by TI to Customer on an annual basis.

ADVANCE INFORMATION

Copyright © 2018, Texas Instruments Incorporated

7.1.2 Tape and Reel Information

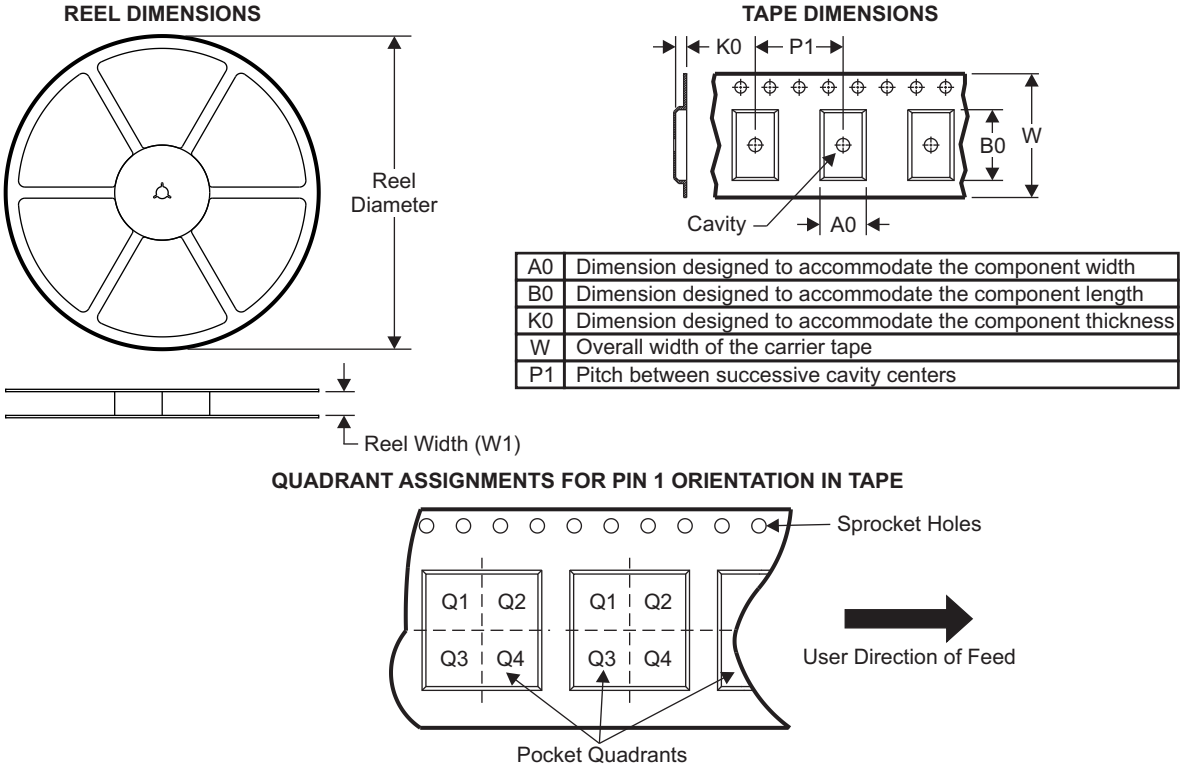

A0	Dimension designed to accommodate the component width
B0	Dimension designed to accommodate the component length
K0	Dimension designed to accommodate the component thickness
W	Overall width of the carrier tape
P1	Pitch between successive cavity centers

Device	Package Type	Package Drawing	Pins	SPQ	Reel Diameter (mm)	Reel Width W1 (mm)	A0 (mm)	B0 (mm)	K0 (mm)	P1 (mm)	W (mm)	Pin1 Quadrant
DS250DF230ZLSR	DSBGA	ZLS	36	3000	330	12.4	5.3	5.3	1.65	8	12	TBD
DS250DF230ZLST	DSBGA	ZLS	36	250	TBD	12.4	5.3	5.3	1.65	8	12	TBD
PD250DF230ZLST	DSBGA	ZLS	36	250	TBD	12.4	5.3	5.3	1.65	8	12	TBD

ADVANCE INFORMATION

Copyright © 2018, Texas Instruments Incorporated

TAPE AND REEL BOX DIMENSIONS

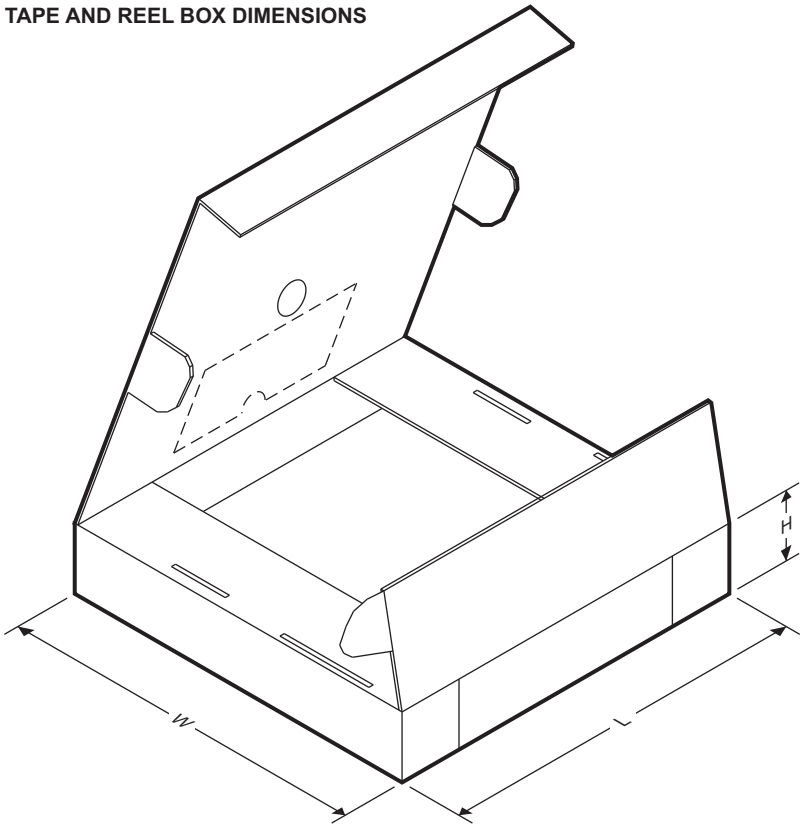

Device	Package Type	Package Drawing	Pins	SPQ	Length (mm)	Width (mm)	Height (mm)
DS250DF230ZLSR	DSBGA	ZLS	36	3000	TBD	TBD	TBD
DS250DF230ZLST	DSBGA	ZLS	36	250	TBD	TBD	TBD
PD250DF230ZLST	DSBGA	ZLS	36	250	TBD	TBD	TBD

ADVANCE INFORMATION

Copyright © 2018, Texas Instruments Incorporated

PACKAGE OUTLINE

ZLS0036A

NFBGA - 1.41 mm max height

BALL GRID ARRAY

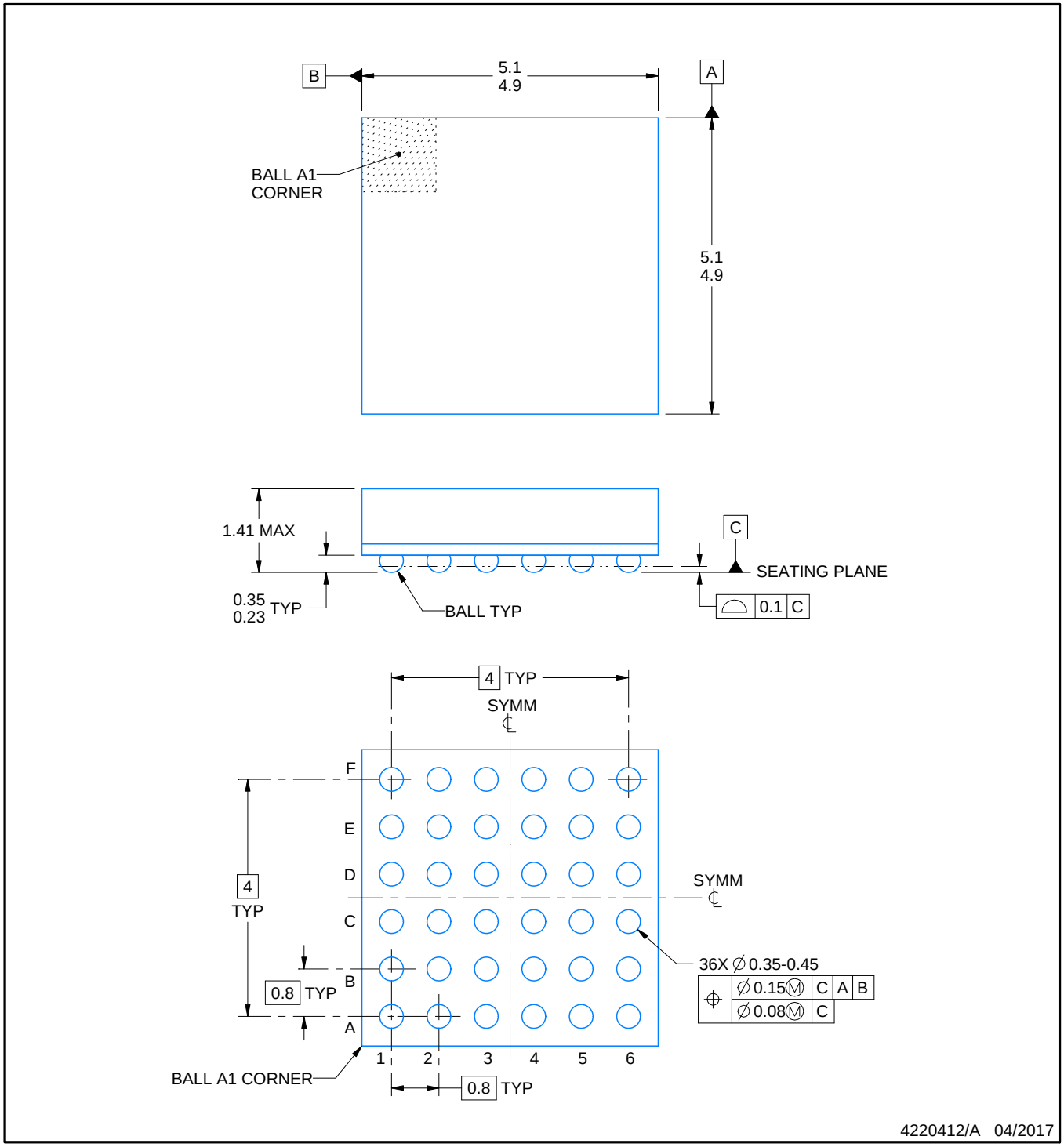

NOTES:

1. All linear dimensions are in millimeters. Any dimensions in parenthesis are for reference only. Dimensioning and tolerancing per ASME Y14.5M.
2. This drawing is subject to change without notice.

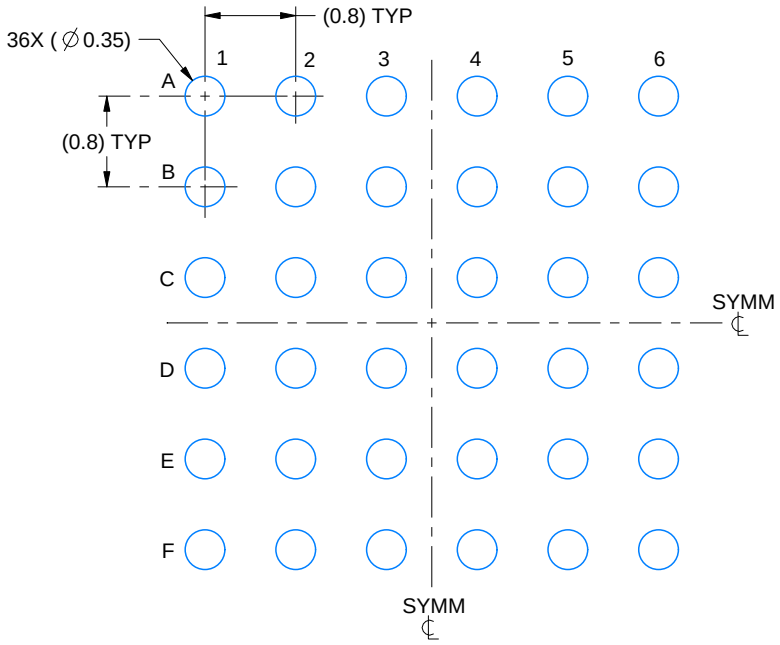

LAND PATTERN EXAMPLE
EXPOSED METAL SHOWN
SCALE:15X



SOLDER MASK DETAILS
NOT TO SCALE

4220412/A 04/2017

NOTES: (continued)

3. Final dimensions may vary due to manufacturing tolerance considerations and also routing constraints.
For more information, see Texas Instruments Literature number SPRAA99 (www.ti.com/lit/spraa99).

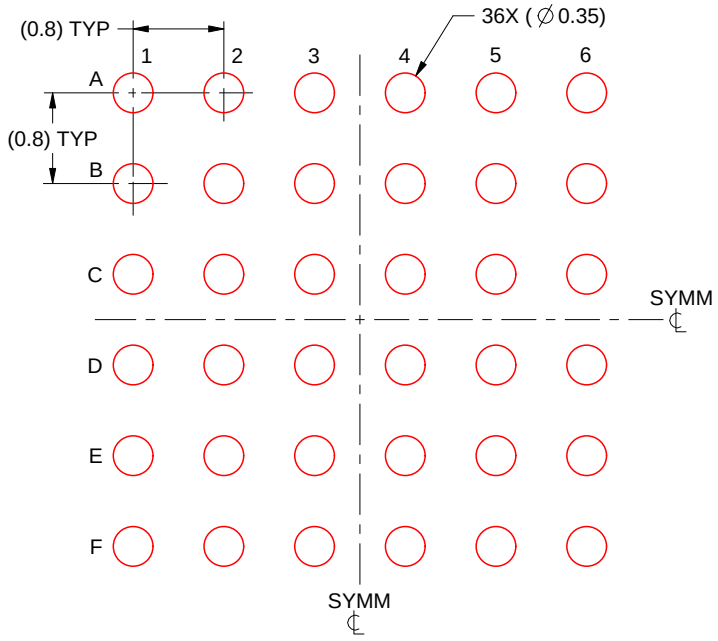

SOLDER PASTE EXAMPLE
BASED ON 0.15 mm THICK STENCIL
SCALE:15X

4220412/A 04/2017

NOTES: (continued)

4. Laser cutting apertures with trapezoidal walls and rounded corners may offer better paste release.

IMPORTANT NOTICE

Texas Instruments Incorporated (TI) reserves the right to make corrections, enhancements, improvements and other changes to its semiconductor products and services per JESD46, latest issue, and to discontinue any product or service per JESD48, latest issue. Buyers should obtain the latest relevant information before placing orders and should verify that such information is current and complete.

TI's published terms of sale for semiconductor products (http://www.ti.com/sc/docs/stdterms.htm) apply to the sale of packaged integrated circuit products that TI has qualified and released to market. Additional terms may apply to the use or sale of other types of TI products and services.

Reproduction of significant portions of TI information in TI data sheets is permissible only if reproduction is without alteration and is accompanied by all associated warranties, conditions, limitations, and notices. TI is not responsible or liable for such reproduced documentation. Information of third parties may be subject to additional restrictions. Resale of TI products or services with statements different from or beyond the parameters stated by TI for that product or service voids all express and any implied warranties for the associated TI product or service and is an unfair and deceptive business practice. TI is not responsible or liable for any such statements.

Buyers and others who are developing systems that incorporate TI products (collectively, "Designers") understand and agree that Designers remain responsible for using their independent analysis, evaluation and judgment in designing their applications and that Designers have full and exclusive responsibility to assure the safety of Designers' applications and compliance of their applications (and of all TI products used in or for Designers' applications) with all applicable regulations, laws and other applicable requirements. Designer represents that, with respect to their applications, Designer has all the necessary expertise to create and implement safeguards that (1) anticipate dangerous consequences of failures, (2) monitor failures and their consequences, and (3) lessen the likelihood of failures that might cause harm and take appropriate actions. Designer agrees that prior to using or distributing any applications that include TI products, Designer will thoroughly test such applications and the functionality of such TI products as used in such applications.

TI's provision of technical, application or other design advice, quality characterization, reliability data or other services or information, including, but not limited to, reference designs and materials relating to evaluation modules, (collectively, "TI Resources") are intended to assist designers who are developing applications that incorporate TI products; by downloading, accessing or using TI Resources in any way, Designer (individually or, if Designer is acting on behalf of a company, Designer's company) agrees to use any particular TI Resource solely for this purpose and subject to the terms of this Notice.

TI's provision of TI Resources does not expand or otherwise alter TI's applicable published warranties or warranty disclaimers for TI products, and no additional obligations or liabilities arise from TI providing such TI Resources. TI reserves the right to make corrections, enhancements, improvements and other changes to its TI Resources. TI has not conducted any testing other than that specifically described in the published documentation for a particular TI Resource.

Designer is authorized to use, copy and modify any individual TI Resource only in connection with the development of applications that include the TI product(s) identified in such TI Resource. NO OTHER LICENSE, EXPRESS OR IMPLIED, BY ESTOPPEL OR OTHERWISE TO ANY OTHER TI INTELLECTUAL PROPERTY RIGHT, AND NO LICENSE TO ANY TECHNOLOGY OR INTELLECTUAL PROPERTY RIGHT OF TI OR ANY THIRD PARTY IS GRANTED HEREIN, including but not limited to any patent right, copyright, mask work right, or other intellectual property right relating to any combination, machine, or process in which TI products or services are used. Information regarding or referencing third-party products or services does not constitute a license to use such products or services, or a warranty or endorsement thereof. Use of TI Resources may require a license from a third party under the patents or other intellectual property of the third party, or a license from TI under the patents or other intellectual property of TI.

TI RESOURCES ARE PROVIDED "AS IS" AND WITH ALL FAULTS. TI DISCLAIMS ALL OTHER WARRANTIES OR REPRESENTATIONS, EXPRESS OR IMPLIED, REGARDING RESOURCES OR USE THEREOF, INCLUDING BUT NOT LIMITED TO ACCURACY OR COMPLETENESS, TITLE, ANY EPIDEMIC FAILURE WARRANTY AND ANY IMPLIED WARRANTIES OF MERCHANTABILITY, FITNESS FOR A PARTICULAR PURPOSE, AND NON-INFRINGEMENT OF ANY THIRD PARTY INTELLECTUAL PROPERTY RIGHTS. TI SHALL NOT BE LIABLE FOR AND SHALL NOT DEFEND OR INDEMNIFY DESIGNER AGAINST ANY CLAIM, INCLUDING BUT NOT LIMITED TO ANY INFRINGEMENT CLAIM THAT RELATES TO OR IS BASED ON ANY COMBINATION OF PRODUCTS EVEN IF DESCRIBED IN TI RESOURCES OR OTHERWISE. IN NO EVENT SHALL TI BE LIABLE FOR ANY ACTUAL, DIRECT, SPECIAL, COLLATERAL, INDIRECT, PUNITIVE, INCIDENTAL, CONSEQUENTIAL OR EXEMPLARY DAMAGES IN CONNECTION WITH OR ARISING OUT OF TI RESOURCES OR USE THEREOF, AND REGARDLESS OF WHETHER TI HAS BEEN ADVISED OF THE POSSIBILITY OF SUCH DAMAGES.

Unless TI has explicitly designated an individual product as meeting the requirements of a particular industry standard (e.g., ISO/TS 16949 and ISO 26262), TI is not responsible for any failure to meet such industry standard requirements.

Where TI specifically promotes products as facilitating functional safety or as compliant with industry functional safety standards, such products are intended to help enable customers to design and create their own applications that meet applicable functional safety standards and requirements. Using products in an application does not by itself establish any safety features in the application. Designers must ensure compliance with safety-related requirements and standards applicable to their applications. Designer may not use any TI products in life-critical medical equipment unless authorized officers of the parties have executed a special contract specifically governing such use. Life-critical medical equipment is medical equipment where failure of such equipment would cause serious bodily injury or death (e.g., life support, pacemakers, defibrillators, heart pumps, neurostimulators, and implantables). Such equipment includes, without limitation, all medical devices identified by the U.S. Food and Drug Administration as Class III devices and equivalent classifications outside the U.S.

TI may expressly designate certain products as completing a particular qualification (e.g., Q100, Military Grade, or Enhanced Product). Designers agree that it has the necessary expertise to select the product with the appropriate qualification designation for their applications and that proper product selection is at Designers' own risk. Designers are solely responsible for compliance with all legal and regulatory requirements in connection with such selection.

Designer will fully indemnify TI and its representatives against any damages, costs, losses, and/or liabilities arising out of Designer's non-compliance with the terms and provisions of this Notice.

Mailing Address: Texas Instruments, Post Office Box 655303, Dallas, Texas 75265
Copyright © 2018, Texas Instruments Incorporated