# DS1259
# Battery Manager Chip

www.dalsemi.com

## FEATURES

- Facilitates uninterruptible power
- Uses battery only when primary $V_{CC}$ is not available
- Low forward voltage drop
- Power fail signal interrupts processor or write protects memory
- Consumes less than 100 nA of battery current
- Low battery warning signal
- Battery can be electrically disconnected upon command
- Battery will automatically reconnect when $V_{CC}$ is applied
- Mates directly with DS1212 Nonvolatile Controller x 16 Chip to back up 16 RAMs
- Optional 16-pin SOIC surface-mount package

## PIN ASSIGNMENT

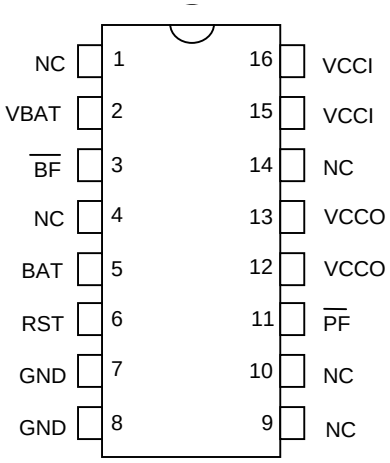


16-Pin DIP Package (300-mil)
See Mech. Drawings Section

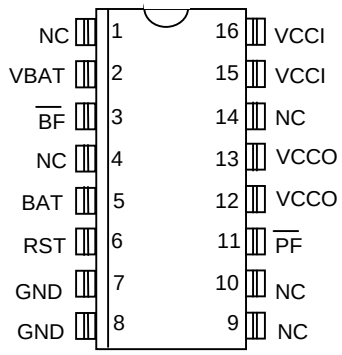


16-Pin SOIC Package (300-mil)
See Mech. Drawings Section

## PIN DESCRIPTION

| | |
|---|---|
| NC | - No Connect |
| $V_{BAT}$ | - Battery Input Connection |
| $\overline{BF}$ | - Battery Fail Output Signal |
| BAT | - Battery Output |
| RST | - Reset Input |
| GND | - Ground |
| $\overline{PF}$ | - Power Fail Output Signal |
| $V_{CCO}$ | - RAM Supply |
| $V_{CCI}$ | - +5V Supply |

## DESCRIPTION

The DS1259 Battery Manager Chip is a low-cost battery management system for portable and nonvolatile electronic equipment. A battery connected to the battery input pin supplies power to CMOS electronic circuits when primary power is lost through an efficient switch via the $V_{CCO}$ pins. When power is supplied from the battery, the power-fail signal is active to warn electronic reset circuits of the power status. Energy loss during shipping and handling is avoided by pulsing reset, thereby causing the battery to be isolated from other elements in the circuits.

## OPERATION

During normal operation, $V_{CCI}$ (Pins 15 and 16) is the primary energy source and power is supplied to $V_{CCO}$ (Pins 12 and 13) through an internal switch at a voltage level of $V_{CCI}$-0.2 volts at 250 mA. During this time the power-fail signal ( $\overline{PF}$ ) is held high, indicating valid $V_{CCI}$ voltage (see Figure 1). However, if the $V_{CCI}$ falls below the trip point ($V_{TP}$), a level of 1.26 times the battery level ($V_{BAT}$), the power-fail signal is driven low. As $V_{CCI}$ falls below the battery level, power is switched from $V_{CCI}$ to $V_{BAT}$ and the battery supplies power to the uninterruptible output ($V_{CCO}$) at $V_{BAT}$-0.2 volts at 15 mA.

On power-up, as the $V_{CCI}$ supply rises above the battery, the primary energy source, $V_{CCI}$, becomes the supply. As $V_{CCI}$ rises above the trip point ($V_{TP}$), the power fail signal is driven back to the high level. During normal operation, BAT (Pin 5) stays at the battery level regardless of the level of $V_{CCI}$.

## BATTERY FAIL

When power is being supplied from the primary energy source, $\overline{BF}$ (Pin 3) is held at a high level, provided that the attached battery ($V_{BAT}$) is greater than 2 volts. If the battery level should decrease to below 2 volts, the $\overline{BF}$ signal is driven low, indicating a low battery. The $\overline{BF}$ signal is always low when the $\overline{PF}$ signal is low.

## RESET

The reset input can be used to prevent the battery from supplying power to $V_{CCO}$ and BAT even if $V_{CCI}$ falls below the level of the battery. This feature is activated by applying a pulsed input on RST to high level for 50ns minimum while primary power is valid (see Figure 2). When primary power is removed after pulsing RST, the $V_{CCO}$ output and BAT will go to high impedance. The next time primary power is applied such that $V_{CCI}$ is greater than $V_{BAT}$, normal operation resumes and $V_{CCO}$ will be supplied by the battery or $V_{CCI}$. The BAT output will also return to the level of the battery. Figure 3 shows the DS1259 in a typical application.

## BLOCK DIAGRAM Figure 1

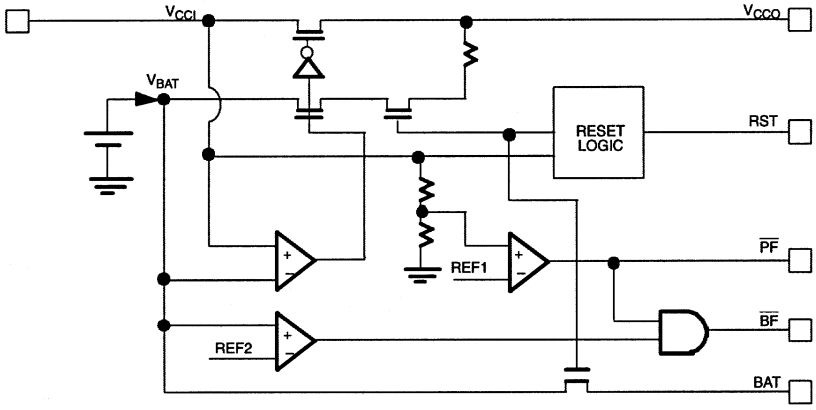

## **RESET TIMING** Figure 2

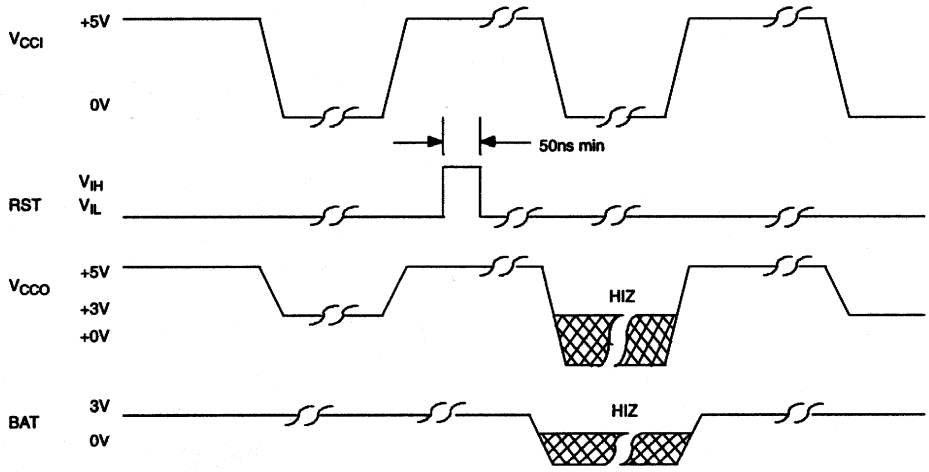


## **TYPICAL APPLICATION** Figure 3

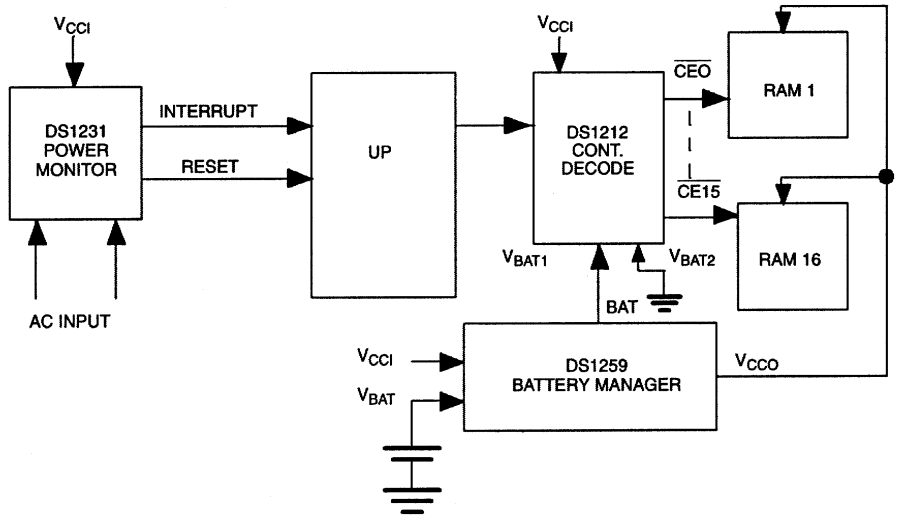

## ABSOLUTE MAXIMUM RATINGS*

| | |
|---|---|
| Voltage on Any Pin Relative to Ground | -0.3V to +7.0V |
| Operating Temperature | 0°C to 70°C |
| Storage Temperature | -55°C to +125°C |
| Soldering Temperature | 260°C for 10 seconds |

* This is a stress rating only and functional operation of the device at these or any other conditions above those indicated in the operation sections of this specification is not implied. Exposure to absolute maximum rating conditions for extended periods of time may affect reliability.

## RECOMMENDED DC OPERATING CONDITIONS (0°C to 70°C)

| PARAMETER | SYMBOL | MIN | TYP | MAX | UNITS | NOTES |
|---|---|---|---|---|---|---|
| Primary Power Supply | $V_{CCI}$ | | 5 | 5.5 | V | 1 |
| Input High Voltage | $V_{IH}$ | 2.0 | | $V_{CC}$+0.3 | V | 1 |
| Input Low Voltage | $V_{IL}$ | -0.3 | | +0.8 | V | 1 |
| Battery Voltage Pin 2 | $V_{BAT}$ | 2.5 | 3 | 3.7 | V | 6 |
| Battery Output Pin 5 | BAT | $V_{BAT}$-0.1 | | | V | 1 |

## DC ELECTRICAL CHARACTERISTICS (0°C to 70°C; $V_{CC}$ = 4.5 to 5.5V)

| PARAMETER | SYMBOL | MIN | TYP | MAX | UNITS | NOTES |
|---|---|---|---|---|---|---|
| Leakage Current | $I_{LO}$ | -1.0 | | +250 | µA | |
| Output Current @ 2.4V | $I_{OH}$ | -1.0 | | | mA | 1, 2 |
| Output Current @ 0.4V | $I_{OL}$ | | | +4.0 | mA | 1, 2 |
| Input Supply Current | $I_{CCI}$ | | | 10 | mA | 3 |
| Pins 12, 13 $V_{CCO}$=$V_{CCI}$-0.2 | $I_{CCO}$ | | | 250 | mA | |
| Pin 11 $\overline{PF}$ Detect | $V_{TP}$ | (1.26x$V_{BAT}$) -250mV | (1.26x$V_{BAT}$) +250mV | | V | 4, 6 |
| Pin 3 $\overline{BF}$ Detect | $V_{BATF}$ | 1.5 | 2.0 | 2.6 | V | 7 |

| PARAMETER | SYMBOL | MIN | TYP | MAX | UNITS | NOTES |
|---|---|---|---|---|---|---|
| Pins 12, 13 $V_{CCO}$=$V_{BAT}$-0.2V | $I_{CCO2}$ | | | 15 | mA | 5 |
| Battery Leakage | $I_{BAT}$ | | | 100 | nA | 8 |
| Pin 5 Battery Output Current | $I_{BATOUT}$ | | | 100 | µA | |

## CAPACITANCE ($T_A$ = 25°C)

| PARAMETER | SYMBOL | MIN | TYP | MAX | UNITS | NOTES |
|---|---|---|---|---|---|---|
| Input Capacitance | $C_{IN}$ | | 5 | 10 | pF | |
| Output Capacitance | $C_{OUT}$ | | 5 | 10 | pF | |

## AC ELECTRICAL CHARACTERISTICS (0°C to 70°C; $V_{CC}$ = 4.0 to 5.5V)

| PARAMETER | SYMBOL | MIN | TYP | MAX | UNITS | NOTES |
|---|---|---|---|---|---|---|
| $V_{CCI}$ Slew Rate | $t_F$ | 300 | | | µs | |
| $V_{CCI}$ Slew Rate | $t_R$ | 1 | | | µs | |
| Power-Down to $\overline{PF}$ Low | $t_{PF}$ | 0 | | | µs | |
| $\overline{PF}$ High after Power-Up | $t_{REC}$ | | | 100 | µs | 9 |

## POWER-DOWN/POWER-UP CONDITION

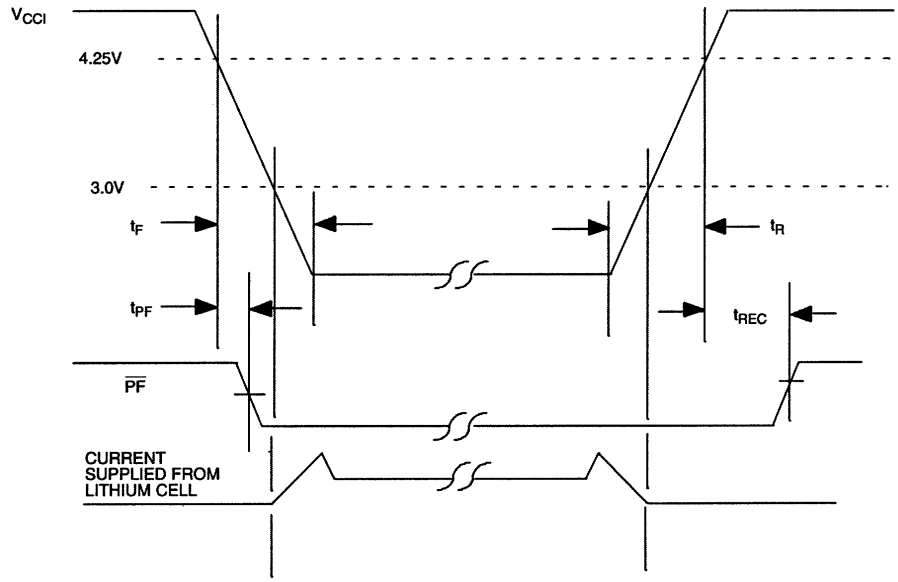


## NOTES:

1. All voltages are referenced to ground.

2. Load capacity is 50 pF.

3. Measured with Pins 11, 12, 13, and 3 open.

4. $V_{TP}$ is the point that $\overline{PF}$ is driven low.

5. $I_{CCO2}$ may be limited by the capability of the battery.

6. Trip point voltage for power-fail detect:
   $V_{TP} = 1.26 \times V_{BAT} \pm 250$ mV
   For 5% operation: $V_{BAT} = 3.7$V max.
   For 10% operation: $V_{BAT} = 3.5$V max.

7. $V_{BATF}$ is the point that $\overline{BF}$ is driven low. These limits are for 0°C to 70°C operation.

8. Battery leakage is the internal energy consumed by the DS1259.

9. $V_{CC}$ = +5 volts, $t_A$ = 25°C.