DS100BR111EVK User's Guide
SMA Evaluation Kit

User's Guide

Literature Number: SNLU156
April 2014

DS100BR111EVK User's Guide SMA Evaluation Kit

The DS100BR111EVK – SMA evaluation kit provides a complete high band-width platform to evaluate the signal integrity and signal conditioning features of the Texas Instruments signal conditioning products – with Equalization and De-emphasis.

SMA edge launch connectors are used as the input and the output connections for this evaluation board. Commercially available adaptor boards can be purchased to facilitate connection to cables or backplane interconnects.

Topic **Page**

1 **Features** 3
2 **Applications** 3
3 **Demo Kit Contents** 3
4 **Ordering Information** 3
5 **Evaluation Board** 4
6 **Setup** 5
7 **Expected Results** 7
8 **Schematic** 11
9 **Bill of Materials** 13

Copyright © 2014, Texas Instruments Incorporated

1 Features

- Two Channel Repeater up to 10.3 Gbps Rate
  - DS100BR111: 1x Bidirectional Lane
- Low 65mW/channel Power Consumption, with Option to Power Down Unused Channels
- Advanced Signal Conditioning Features
  - 4 Stage Equalization
  - Transmit De-Emphasis
  - Transmit VOD Control
  - < 0.3 UI of Residual DJ at 10 Gbps
- Fully Programmable via Pin Selection or SMBus Interface
- Selectable Single Supply Operation
- >4 kV HBM ESD Rating
- 3.3 V LVCMOS Input Tolerant for SMBus Interface
- Flow–Thru Pinout Package: 24-Pin LLP (4 mm x 4 mm)
- Industrial –40 to 85°C Operating Temperature Range

2 Applications

- High-Speed Active Copper Cable Modules and FR4 Backplanes in Communication Systems
- 10GE, FC, SAS, SATA 3/6 Gbps (with OOB detection), Infiniband, CPRI, RXAUI, and many others

3 Demo Kit Contents

- End User License Agreement
- DS100BR111EVK User Guide Rev.1.2
- DS100BR111EVK Board

4 Ordering Information

Table 1. DS100BR111AEVK Ordering Information

DEVICE	QUANTITY
DS100BR111SQ/NOPB	2000
DS100BR111SQE/NOPB	250
SMA Evaluation Kit: DS100BR111EVK/NOPB	

Copyright © 2014, Texas Instruments Incorporated

5 Evaluation Board

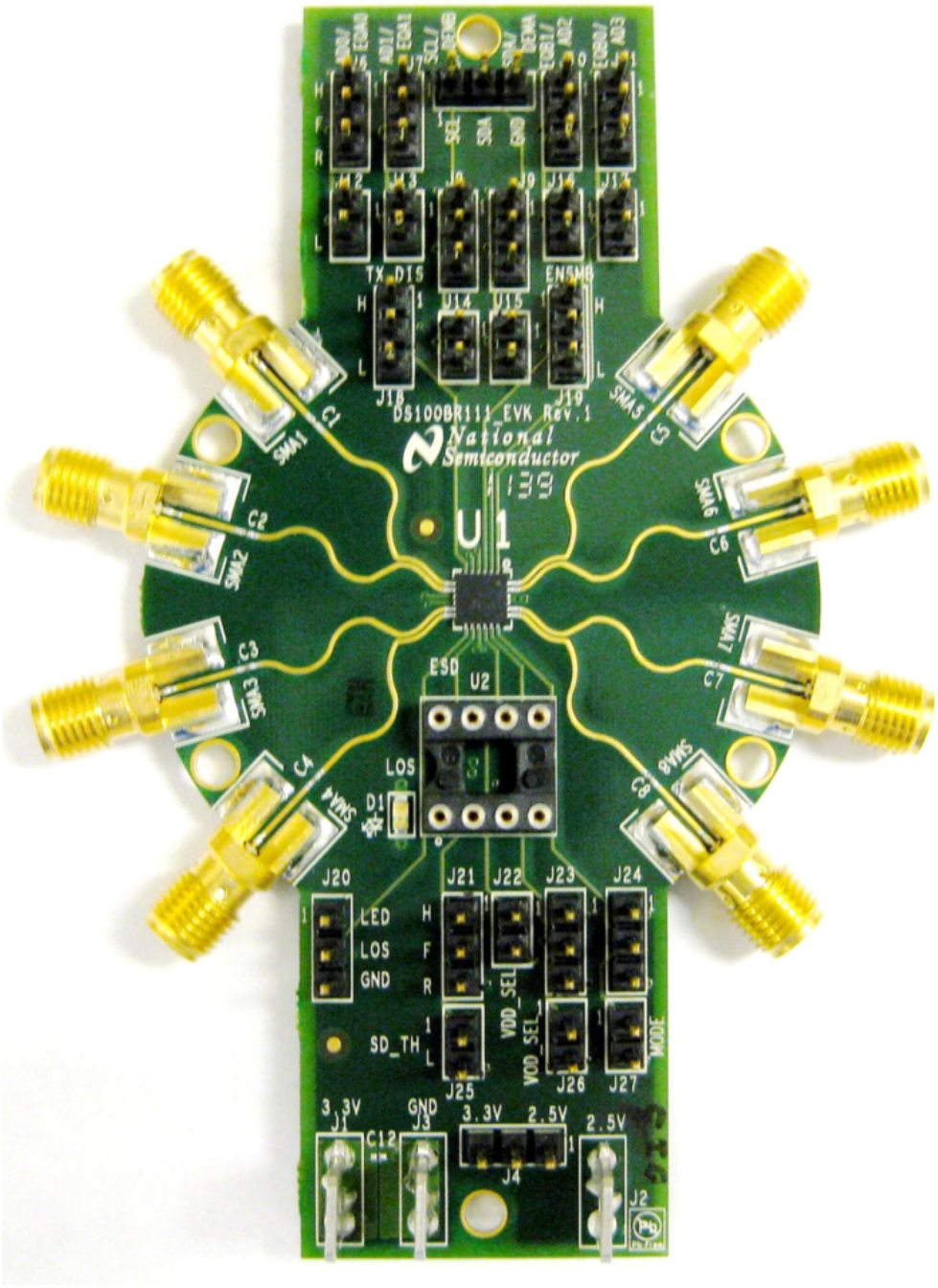

Figure 1. DS100BR111EVK Evaluation Board

Copyright © 2014, Texas Instruments Incorporated

6 Setup

The DS100BR111EVK – SMA evaluation kit can be used in three different modes:

1. **Pin Control** (provides access to selected signal integrity settings)
2. **SMBus Mode** (full access to signal integrity and control settings)
3. **EEPROM Mode** (full access to signal integrity and control settings)

The EEPROM mode is a convenient method of programming one or more DS100BRxxx devices on system power-up when a SMBus master (microcontroller or similar) is unavailable in the design.

6.1 DS100BR111 Pin Control

Uses the external control pins on the DS100BR111 to configure the signal integrity and control settings of the device. In this mode only a subset of the equalization and de-emphasis levels are available. Due to the limited number of control pins, a limited bandwidth 4-level input scheme has been implemented across the control pin interface. This allows for improved EQ, DE, and VOD control with fewer physical pins.

The 4 levels are defined as:

1. **Low:** 1 KΩ to GND
2. **Resistor:** 20 KΩ to GND
3. **Float:** No External Connection
4. **High:** 1 KΩ to VDD

The EVK interfaces to this 4-level IO using the setup below. Only one shunt connection is required to access any of the 4 levels. This methodology minimizes the risk of improper connections that could damage the board or board power supply.

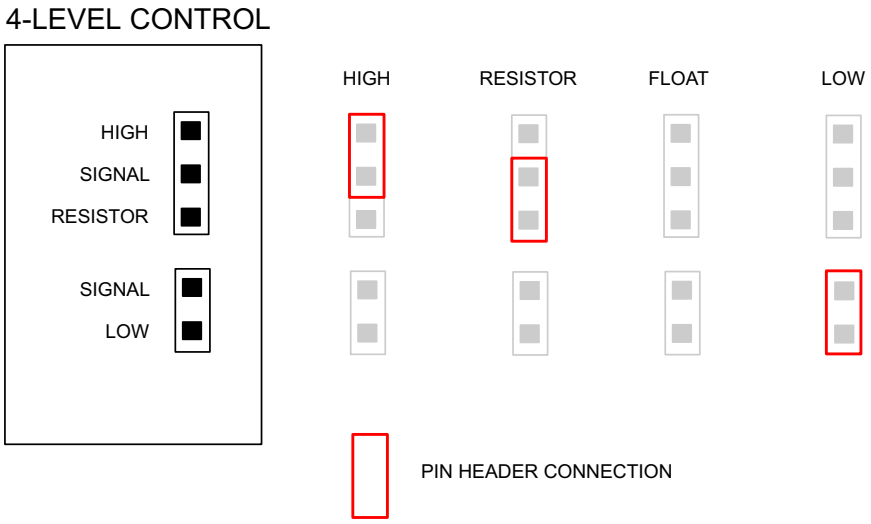

Figure 2. 4-Level IO Control on EVK

The DS100BR111 EVKs are shipped ready to use in pin control configuration. As delivered, the EVK will have the following installed jumpers.

1. J4 – 3.3 V operation: Use the J1 and J3 connectors to supply 3.3 V power to the EVK.
2. J18 – TX-DIS = LOW: Device is enabled.
3. J19 – ENSMB = LOW: PIN CONTROL configuration mode.
4. J20 – LED – LOS: The LOS output is connected to the onboard LED. The LED will glow green in the presence of a valid signal on CH A input.
5. J22 – VDD_SEL = LOW: Use DS100BR111A internal regulator to convert 3.3 V supply to proper internal supply level of 2.5 V. Note: The 2.5 V level may be observed on the device VDD pins.
6. VOD_SEL = Float: Default output amplitude settings for CH A and CH B.

Copyright © 2014, Texas Instruments Incorporated

6.2 SMBus Mode

The SMBus can also be used to control the DS100BR111 devices. This method has the advantage of independent control and finer signal conditioning granularity.

Table 2. Typical DS100BR111 Register Writes

Register Address	Function	Description
Register 0x0F	CHA EQ	Write EQ setting à 1B'h
Register 0x11	CHA DEM	Write DE setting for bits [2:0] = 000'b
Register 0x23	CHA VOD	Write VOD setting for bits [4:2] = 101'b
Register 0x06	CRC DIS	Write bit [3] = 1'b send register updates directly to channel without any CRC check.

6.3 EEPROM Mode

A serial EEPROM may also be used to configure one or more DS100BR111 devices. This configuration mode is accessed by setting the ENSMB 4-level input to FLOAT. For additional information please see the device datasheet.

Copyright © 2014, Texas Instruments Incorporated

7 Expected Results

This evaluation board has been designed to evaluate the cable and/or FR4 signal conditioning performance of the DS100BR111. Adding additional cables or adaptor boards into the signal path will have some impact on the optimal settings, but keeping the adaptor boards small and using short high-quality SMA cables will minimize this effect.

7.1 Cable Performance

When used in a full active cable application, it is generally expected that the DS100BR111 driving the cable will use a VOD setting of 1000 mV or greater and no output De-Emphasis (DE). The DS100BR111 receiving the signal will utilize a Continuous Time Linear Equalizer (CTLE) to recover the attenuated signal and redrive it into the local system.

SETUP1: PRBS7 Generator → BR111 (A) → 10m 30AWG cable → DS100BR111 (B) → Scope

DS100BR111A (A) Transmit Settings

1. Output Voltage Amplitude = 1000 mV or greater
2. De-Emphasis = 0 dB
3. EQ = 00 (Bypass)

DS100BR111A (B) Receive Settings

1. Output Voltage Amplitude = 700 mV or greater
2. De-Emphasis = 0 dB
3. EQ = 2F'h (Default)

Additional documentation and device performance is available in the device datasheet.

Copyright © 2014, Texas Instruments Incorporated

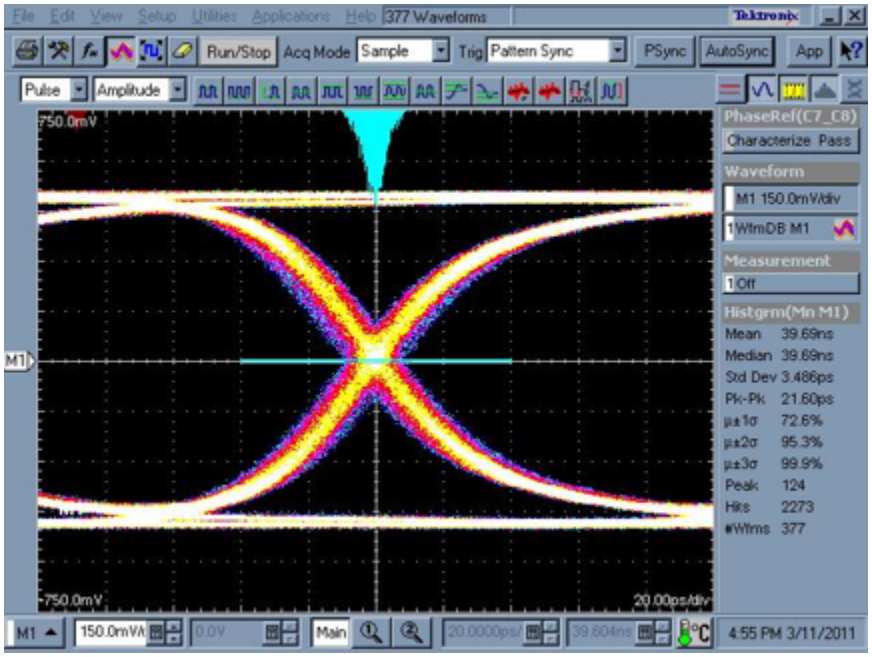

Figure 3. 6 Gbps Eye Diagram at SCOPE in SETUP1

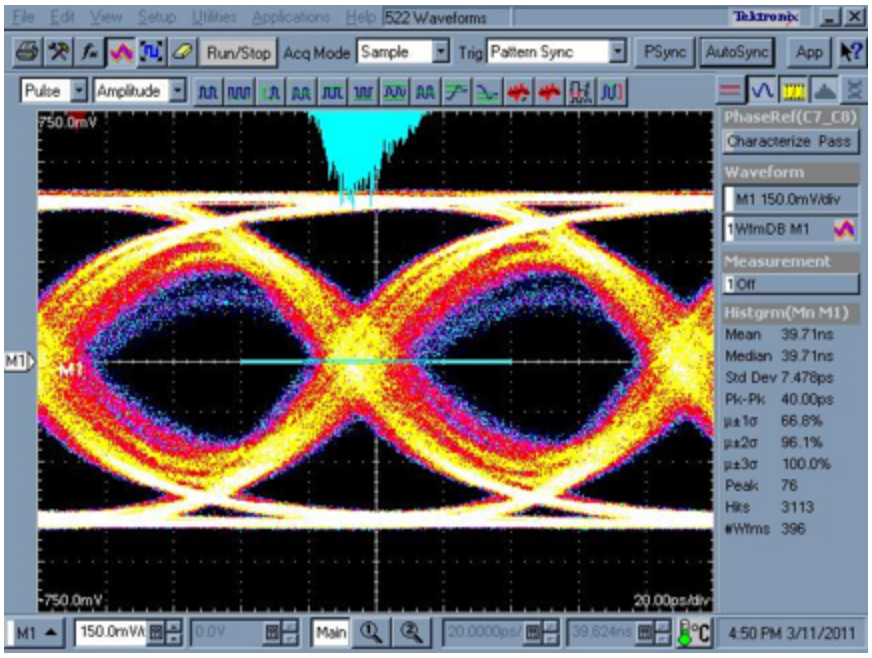

Figure 4. 10.3125 Gbps Eye Diagram at SCOPE in SETUP1

Copyright © 2014, Texas Instruments Incorporated

Data Source: MATH1	Data Rate: 10.3125 Gbps	Filter: None
SSC: Off	Pattern: 127 bits	Channel: None
Phase Reference: 10.3125 GHz	Sample Count: 52.70 k	Equalizer: None

Jitter (Decision Threshold: 2.87 mV)			**Noise** (Sampling Phase: 0 UI)		
Random Jitter			**Random Noise**		
RJ (RMS)	=	1.28 ps	RN (RMS)	=	2.17 mV
RJ(h) (RMS)	=	1.27 ps	RN(v) (RMS)	=	2.16 mV
RJ(v) (RMS)	=	177.69 fs	RN(h) (RMS)	=	279.32 uV
Deterministic Jitter			**Deterministic Noise**		
DJ	=	30.26 ps	DN	=	424.41 mV
DDJ	=	28.10 ps	DDN	=	414.39 mV
DCD	=	466.71 fs	DDN(level 1)	=	340.70 mV
DDPWS	=	23.65 ps	DDN(level 0)	=	283.59 mV
PJ	=	821.85 fs	PN	=	9.97 mV
PJ(h)	=	0 s	PN(v)	=	9.97 mV
PJ(v)	=	821.85 fs	PN(h)	=	0 V
Total Jitter @ BER			**Total Noise @ BER**		
TJ (1E-12)	=	47.18 ps	TN (1E-12)	=	457.60 mV
Eye Opening (1E-12)	=	49.79 ps	Eye Opening (1E-12)	=	332.20 mV
			Eye Amplitude	=	789.80 mV
Dual Dirac			**SSC Modulation**		
RJ(d-d)	=	1.50 ps	Magnitude	=	0 ppm
DJ(d-d)	=	25.62 ps	Frequency	=	0 Hz

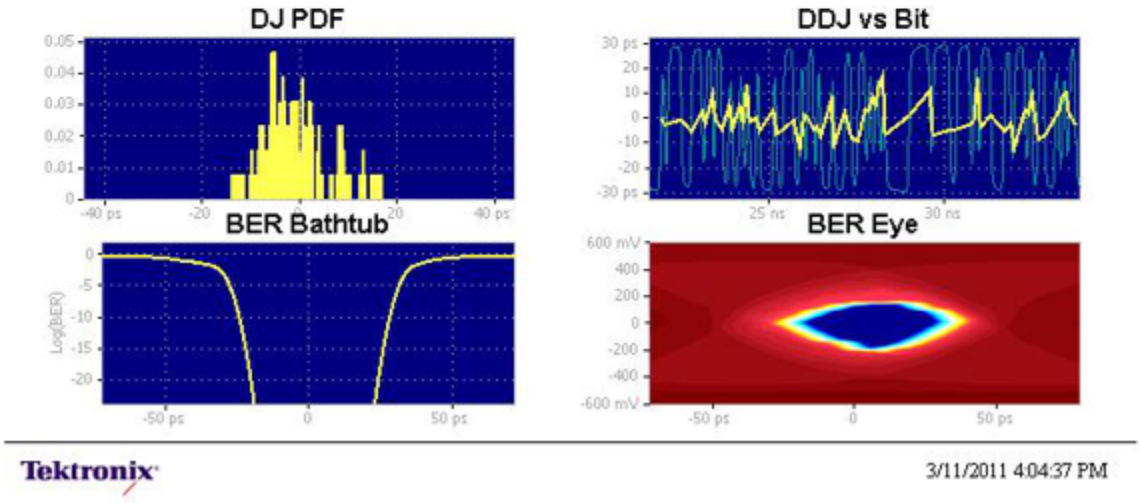

Figure 5. Jitter Analysis:
Breakdown into Dj, Rj, and Tj for 10.3125 Gbps Case

Copyright © 2014, Texas Instruments Incorporated

7.2 FR4 Performance

The output de-emphasis of the DS100BR111 allows for flexible placement options on the receive system board. Even at 10.3125 Gbps, a clean eye can be achieved nearly 20” away without resorting to expensive board materials or special board stackups.

SETUP2: PRBS7 Generator → BR111 (A) → 15” FR4 (4 mil trace width) → Scope

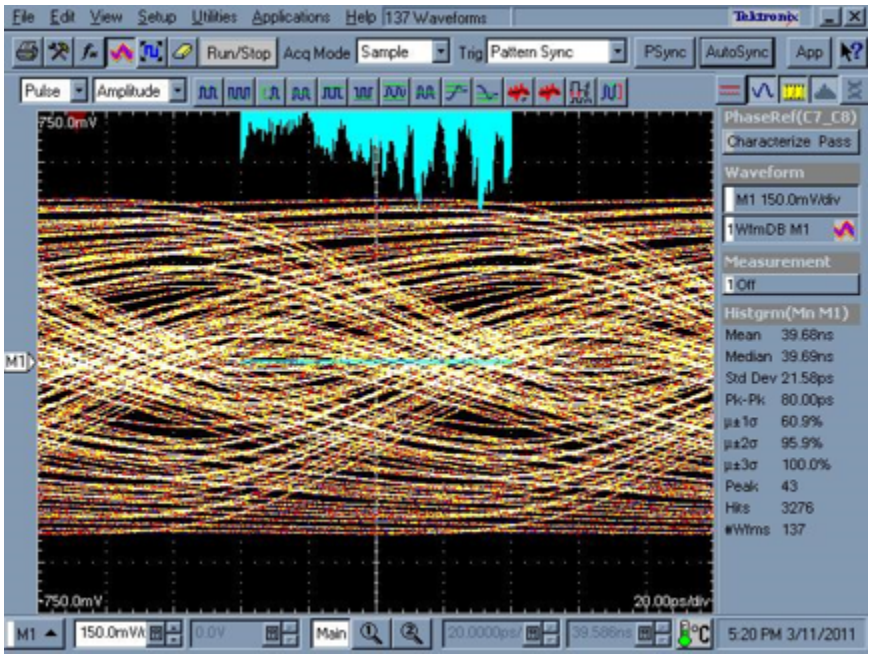

Figure 6. 10.3125 Gbps Eye Diagram at SCOPE in SETUP2 (DE Setting = 000)

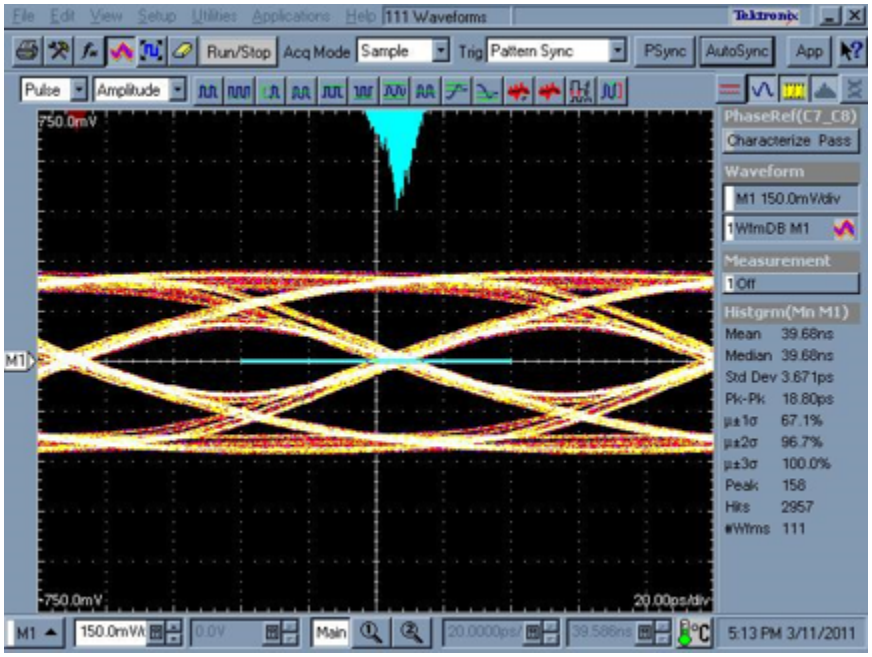

Figure 7. 10.3125 Gbps Eye Diagram at SCOPE in SETUP2 (DE Setting = 110)

Copyright © 2014, Texas Instruments Incorporated

8 Schematic

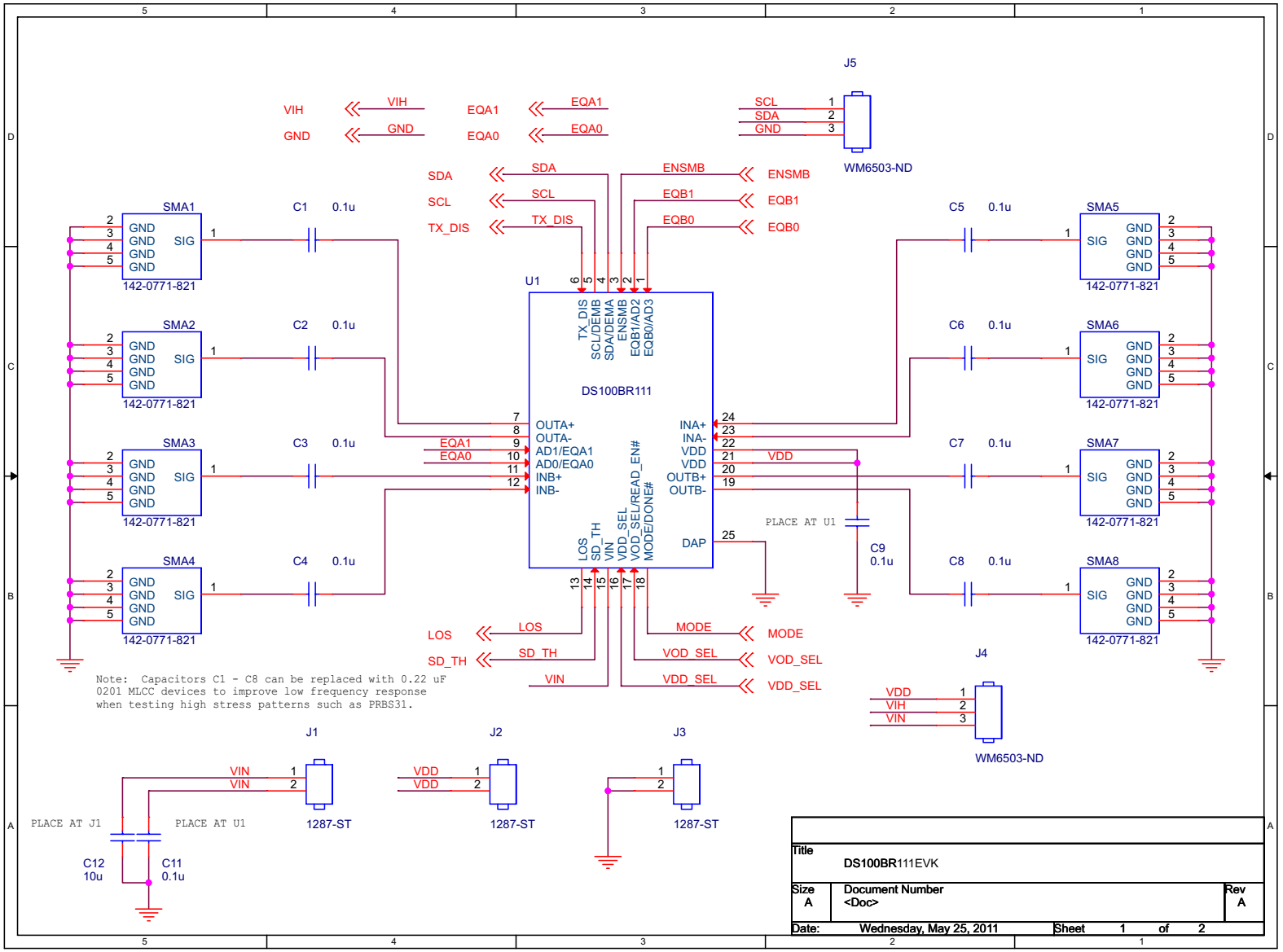

Figure 8. DS100BR111AEVK Schematic

Copyright © 2014, Texas Instruments Incorporated

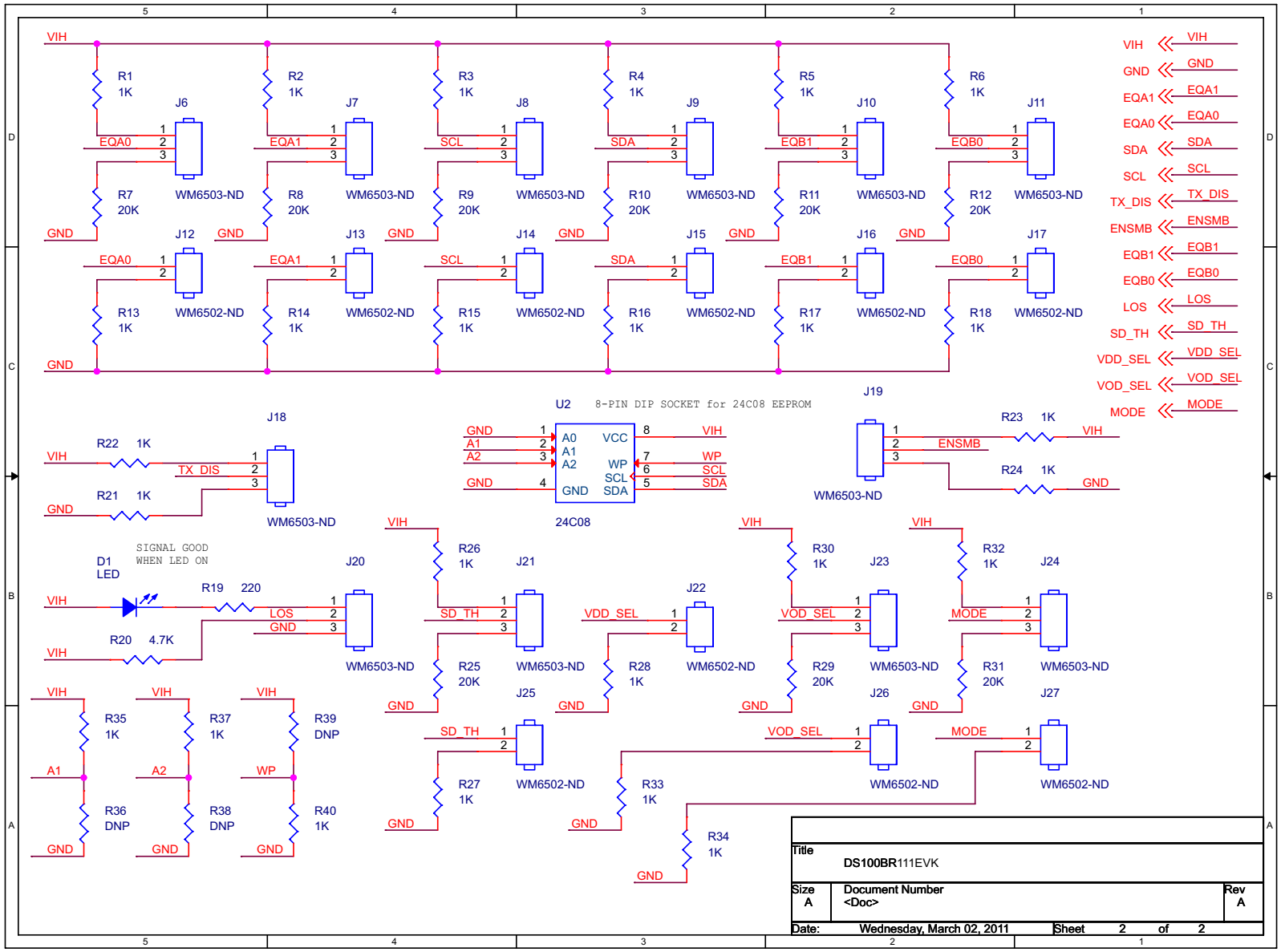

Figure 9. DS100BR111AEVK Schematic

Copyright © 2014, Texas Instruments Incorporated

9 Bill of Materials

Item	Quantity	Reference	Digikey PN	Manufacture PN	Descriptions
1	10	C1,C2,C3,C4,C5, C6,C7, C8,C9,C11	445-1796-1-ND	C0603X5R0J104K	CAP CERAMIC .1UF 6.3 V X5R 0201
2	1	C12	511-1502-1-ND	TCTAL1C226M8R	CAP TANT 22UF 16 V 20% SMD 1206
3	1	D1	160-1409-1-ND	LTST-C139KGKT	LED GREEN 0603 SMD
4	10	SMA1,SMA2,SMA3, SMA4, SMA5,SMA6, SMA7,SMA8, SMA9, SMA10,SMA11,SMA12	J807-ND	142-0771-821	CONN JACK SMA 50 Ω PC MOUNT
5	14	J4,J5,J6,J7, J8,J9,J10, J11,J18,J19, J20,J21,J23, J24	WM6503-ND	22-28-4033	CONN HEADER 3POS .100 VERT GOLD
6	10	J12,J13,J14, J15,J16,J17, J22,J25,J26,J27	WM6502-ND	22-28-4023	CONN HEADER 2POS .100 VERT GOLD
7	26	R1,R2,R3,R4, R5,R6,R13, R14, R15,R16,R17,R18, R21, R22,R23,R24, R26,R27,R28, R30, R32,R33,R34,R35, R37, R40	RHM1.0KJCT-ND	MCR01MZPJ102	RES 1.0K Ω 1/16W 5% 0402 SMD
8	9	R7,R8,R9, R10,R11,R12, R25, R29,R31	RHM20.0KLCT-ND	MCR01MZPF2002	RES 20.0K Ω 1/16W 1% 0402 SMD
9	1	R19	RHM220JCT-ND	MCR01MZPJ221	RES 220 Ω 1/16W 5% 0402 SMD
10	1	R20	RHM4.7KJCT-ND	MCR01MZPJ472	RES 4.7K Ω 1/16W 5% 0402 SMD
11	1	R41,R42	RHM0.0JCT-ND	MCR01MZPJ472	RES 0.0 Ω 1/16W 5% 0402 SMD
12	1	U1	NA	NSC	DS100BR111SQ/NOPB (24LLP - 4x4mm)
13	1	U2	ED90197-ND	115-43-308-41-001000	IC SOCKET 8PIN DIP
14	3	R36,R38,R39	DNP	DNP	DNP

Copyright © 2014, Texas Instruments Incorporated

ADDITIONAL TERMS AND CONDITIONS, WARNINGS, RESTRICTIONS, AND DISCLAIMERS FOR EVALUATION MODULES

Texas Instruments Incorporated (TI) markets, sells, and loans all evaluation boards, kits, and/or modules (EVMs) pursuant to, and user expressly acknowledges, represents, and agrees, and takes sole responsibility and risk with respect to, the following:

1. User agrees and acknowledges that EVMs are intended to be handled and used for feasibility evaluation only in laboratory and/or development environments. Notwithstanding the foregoing, in certain instances, TI makes certain EVMs available to users that do not handle and use EVMs solely for feasibility evaluation only in laboratory and/or development environments, but may use EVMs in a hobbyist environment. All EVMs made available to hobbyist users are FCC certified, as applicable. Hobbyist users acknowledge, agree, and shall comply with all applicable terms, conditions, warnings, and restrictions in this document and are subject to the disclaimer and indemnity provisions included in this document.
2. Unless otherwise indicated, EVMs are not finished products and not intended for consumer use. EVMs are intended solely for use by technically qualified electronics experts who are familiar with the dangers and application risks associated with handling electrical mechanical components, systems, and subsystems.
3. User agrees that EVMs shall not be used as, or incorporated into, all or any part of a finished product.
4. User agrees and acknowledges that certain EVMs may not be designed or manufactured by TI.
5. User must read the user's guide and all other documentation accompanying EVMs, including without limitation any warning or restriction notices, prior to handling and/or using EVMs. Such notices contain important safety information related to, for example, temperatures and voltages. For additional information on TI's environmental and/or safety programs, please visit www.ti.com/esh or contact TI.
6. User assumes all responsibility, obligation, and any corresponding liability for proper and safe handling and use of EVMs.
7. Should any EVM not meet the specifications indicated in the user's guide or other documentation accompanying such EVM, the EVM may be returned to TI within 30 days from the date of delivery for a full refund. THE FOREGOING LIMITED WARRANTY IS THE EXCLUSIVE WARRANTY MADE BY TI TO USER AND IS IN LIEU OF ALL OTHER WARRANTIES, EXPRESSED, IMPLIED, OR STATUTORY, INCLUDING ANY WARRANTY OF MERCHANTABILITY OR FITNESS FOR ANY PARTICULAR PURPOSE. TI SHALL NOT BE LIABLE TO USER FOR ANY INDIRECT, SPECIAL, INCIDENTAL, OR CONSEQUENTIAL DAMAGES RELATED TO THE HANDLING OR USE OF ANY EVM.
8. No license is granted under any patent right or other intellectual property right of TI covering or relating to any machine, process, or combination in which EVMs might be or are used. TI currently deals with a variety of customers, and therefore TI's arrangement with the user is not exclusive. TI assumes no liability for applications assistance, customer product design, software performance, or infringement of patents or services with respect to the handling or use of EVMs.
9. User assumes sole responsibility to determine whether EVMs may be subject to any applicable federal, state, or local laws and regulatory requirements (including but not limited to U.S. Food and Drug Administration regulations, if applicable) related to its handling and use of EVMs and, if applicable, compliance in all respects with such laws and regulations.
10. User has sole responsibility to ensure the safety of any activities to be conducted by it and its employees, affiliates, contractors or designees, with respect to handling and using EVMs. Further, user is responsible to ensure that any interfaces (electronic and/or mechanical) between EVMs and any human body are designed with suitable isolation and means to safely limit accessible leakage currents to minimize the risk of electrical shock hazard.
11. User shall employ reasonable safeguards to ensure that user's use of EVMs will not result in any property damage, injury or death, even if EVMs should fail to perform as described or expected.
12. User shall be solely responsible for proper disposal and recycling of EVMs consistent with all applicable federal, state, and local requirements.

Certain Instructions. User shall operate EVMs within TI's recommended specifications and environmental considerations per the user's guide, accompanying documentation, and any other applicable requirements. Exceeding the specified ratings (including but not limited to input and output voltage, current, power, and environmental ranges) for EVMs may cause property damage, personal injury or death. If there are questions concerning these ratings, user should contact a TI field representative prior to connecting interface electronics including input power and intended loads. Any loads applied outside of the specified output range may result in unintended and/or inaccurate operation and/or possible permanent damage to the EVM and/or interface electronics. Please consult the applicable EVM user's guide prior to connecting any load to the EVM output. If there is uncertainty as to the load specification, please contact a TI field representative. During normal operation, some circuit components may have case temperatures greater than 60°C as long as the input and output are maintained at a normal ambient operating temperature. These components include but are not limited to linear regulators, switching transistors, pass transistors, and current sense resistors which can be identified using EVMs' schematics located in the applicable EVM user's guide. When placing measurement probes near EVMs during normal operation, please be aware that EVMs may become very warm. As with all electronic evaluation tools, only qualified personnel knowledgeable in electronic measurement and diagnostics normally found in development environments should use EVMs.

Agreement to Defend, Indemnify and Hold Harmless. User agrees to defend, indemnify, and hold TI, its directors, officers, employees, agents, representatives, affiliates, licensors and their representatives harmless from and against any and all claims, damages, losses, expenses, costs and liabilities (collectively, "Claims") arising out of, or in connection with, any handling and/or use of EVMs. User's indemnity shall apply whether Claims arise under law of tort or contract or any other legal theory, and even if EVMs fail to perform as described or expected.

Safety-Critical or Life-Critical Applications. If user intends to use EVMs in evaluations of safety critical applications (such as life support), and a failure of a TI product considered for purchase by user for use in user's product would reasonably be expected to cause severe personal injury or death such as devices which are classified as FDA Class III or similar classification, then user must specifically notify TI of such intent and enter into a separate Assurance and Indemnity Agreement.

RADIO FREQUENCY REGULATORY COMPLIANCE INFORMATION FOR EVALUATION MODULES

Texas Instruments Incorporated (TI) evaluation boards, kits, and/or modules (EVMs) and/or accompanying hardware that is marketed, sold, or loaned to users may or may not be subject to radio frequency regulations in specific countries.

General Statement for EVMs Not Including a Radio

For EVMs not including a radio and not subject to the U.S. Federal Communications Commission (FCC) or Industry Canada (IC) regulations, TI intends EVMs to be used only for engineering development, demonstration, or evaluation purposes. EVMs are not finished products typically fit for general consumer use. EVMs may nonetheless generate, use, or radiate radio frequency energy, but have not been tested for compliance with the limits of computing devices pursuant to part 15 of FCC or the ICES-003 rules. Operation of such EVMs may cause interference with radio communications, in which case the user at his own expense will be required to take whatever measures may be required to correct this interference.

General Statement for EVMs including a radio

User Power/Frequency Use Obligations: For EVMs including a radio, the radio included in such EVMs is intended for development and/or professional use only in legally allocated frequency and power limits. Any use of radio frequencies and/or power availability in such EVMs and their development application(s) must comply with local laws governing radio spectrum allocation and power limits for such EVMs. It is the user's sole responsibility to only operate this radio in legally acceptable frequency space and within legally mandated power limitations. Any exceptions to this are strictly prohibited and unauthorized by TI unless user has obtained appropriate experimental and/or development licenses from local regulatory authorities, which is the sole responsibility of the user, including its acceptable authorization.

U.S. Federal Communications Commission Compliance

For EVMs Annotated as FCC – FEDERAL COMMUNICATIONS COMMISSION Part 15 Compliant

Caution

This device complies with part 15 of the FCC Rules. Operation is subject to the following two conditions: (1) This device may not cause harmful interference, and (2) this device must accept any interference received, including interference that may cause undesired operation. Changes or modifications could void the user's authority to operate the equipment.

FCC Interference Statement for Class A EVM devices

This equipment has been tested and found to comply with the limits for a Class A digital device, pursuant to part 15 of the FCC Rules. These limits are designed to provide reasonable protection against harmful interference when the equipment is operated in a commercial environment. This equipment generates, uses, and can radiate radio frequency energy and, if not installed and used in accordance with the instruction manual, may cause harmful interference to radio communications. Operation of this equipment in a residential area is likely to cause harmful interference in which case the user will be required to correct the interference at its own expense.

FCC Interference Statement for Class B EVM devices

This equipment has been tested and found to comply with the limits for a Class B digital device, pursuant to part 15 of the FCC Rules. These limits are designed to provide reasonable protection against harmful interference in a residential installation. This equipment generates, uses and can radiate radio frequency energy and, if not installed and used in accordance with the instructions, may cause harmful interference to radio communications. However, there is no guarantee that interference will not occur in a particular installation. If this equipment does cause harmful interference to radio or television reception, which can be determined by turning the equipment off and on, the user is encouraged to try to correct the interference by one or more of the following measures:

- Reorient or relocate the receiving antenna.
- Increase the separation between the equipment and receiver.
- Connect the equipment into an outlet on a circuit different from that to which the receiver is connected.
- Consult the dealer or an experienced radio/TV technician for help.

Industry Canada Compliance (English)

For EVMs Annotated as IC – INDUSTRY CANADA Compliant:

This Class A or B digital apparatus complies with Canadian ICES-003.

Changes or modifications not expressly approved by the party responsible for compliance could void the user's authority to operate the equipment.

Concerning EVMs Including Radio Transmitters

This device complies with Industry Canada licence-exempt RSS standard(s). Operation is subject to the following two conditions: (1) this device may not cause interference, and (2) this device must accept any interference, including interference that may cause undesired operation of the device.

Concerning EVMs Including Detachable Antennas

Under Industry Canada regulations, this radio transmitter may only operate using an antenna of a type and maximum (or lesser) gain approved for the transmitter by Industry Canada. To reduce potential radio interference to other users, the antenna type and its gain should be so chosen that the equivalent isotropically radiated power (e.i.r.p.) is not more than that necessary for successful communication.

This radio transmitter has been approved by Industry Canada to operate with the antenna types listed in the user guide with the maximum permissible gain and required antenna impedance for each antenna type indicated. Antenna types not included in this list, having a gain greater than the maximum gain indicated for that type, are strictly prohibited for use with this device.

Canada Industry Canada Compliance (French)

Cet appareil numérique de la classe A ou B est conforme à la norme NMB-003 du Canada

Les changements ou les modifications pas expressément approuvés par la partie responsable de la conformité ont pu vider l'autorité de l'utilisateur pour actionner l'équipement.

Concernant les EVMs avec appareils radio

Le présent appareil est conforme aux CNR d'Industrie Canada applicables aux appareils radio exempts de licence. L'exploitation est autorisée aux deux conditions suivantes : (1) l'appareil ne doit pas produire de brouillage, et (2) l'utilisateur de l'appareil doit accepter tout brouillage radioélectrique subi, même si le brouillage est susceptible d'en compromettre le fonctionnement.

Concernant les EVMs avec antennes détachables

Conformément à la réglementation d'Industrie Canada, le présent émetteur radio peut fonctionner avec une antenne d'un type et d'un gain maximal (ou inférieur) approuvé pour l'émetteur par Industrie Canada. Dans le but de réduire les risques de brouillage radioélectrique à l'intention des autres utilisateurs, il faut choisir le type d'antenne et son gain de sorte que la puissance isotrope rayonnée équivalente (p.i.r.e.) ne dépasse pas l'intensité nécessaire à l'établissement d'une communication satisfaisante.

Le présent émetteur radio a été approuvé par Industrie Canada pour fonctionner avec les types d'antenne énumérés dans le manuel d'usage et ayant un gain admissible maximal et l'impédance requise pour chaque type d'antenne. Les types d'antenne non inclus dans cette liste, ou dont le gain est supérieur au gain maximal indiqué, sont strictement interdits pour l'exploitation de l'émetteur.

Mailing Address: Texas Instruments, Post Office Box 655303, Dallas, Texas 75265
Copyright © 2014, Texas Instruments Incorporated

Important Notice for Users of EVMs Considered "Radio Frequency Products" in Japan

EVMs entering Japan are NOT certified by TI as conforming to Technical Regulations of Radio Law of Japan.

If user uses EVMs in Japan, user is required by Radio Law of Japan to follow the instructions below with respect to EVMs:

1. Use EVMs in a shielded room or any other test facility as defined in the notification #173 issued by Ministry of Internal Affairs and Communications on March 28, 2006, based on Sub-section 1.1 of Article 6 of the Ministry's Rule for Enforcement of Radio Law of Japan,
2. Use EVMs only after user obtains the license of Test Radio Station as provided in Radio Law of Japan with respect to EVMs, or
3. Use of EVMs only after user obtains the Technical Regulations Conformity Certification as provided in Radio Law of Japan with respect to EVMs. Also, do not transfer EVMs, unless user gives the same notice above to the transferee. Please note that if user does not follow the instructions above, user will be subject to penalties of Radio Law of Japan.

http://www.tij.co.jp

【無線電波を送信する製品の開発キットをお使いになる際の注意事項】 本開発キットは技術基準適合証明を受けておりません。 本製品のご使用に際しては、電波法遵守のため、以下のいずれかの措置を取っていただく必要がありますのでご注意ください。

1. 電波法施行規則第6条第1項第1号に基づく平成18年3月28日総務省告示第173号で定められた電波暗室等の試験設備でご使用いただく。
2. 実験局の免許を取得後ご使用いただく。
3. 技術基準適合証明を取得後ご使用いただく。。

なお、本製品は、上記の「ご使用にあたっての注意」を譲渡先、移転先に通知しない限り、譲渡、移転できないものとします

上記を遵守頂けない場合は、電波法の罰則が適用される可能性があることをご留意ください。

日本テキサス・インスツルメンツ株式会社
東京都新宿区西新宿６丁目２４番１号
西新宿三井ビル
http://www.tij.co.jp

Texas Instruments Japan Limited
(address) 24-1, Nishi-Shinjuku 6 chome, Shinjuku-ku, Tokyo, Japan

IMPORTANT NOTICE

Texas Instruments Incorporated and its subsidiaries (TI) reserve the right to make corrections, enhancements, improvements and other changes to its semiconductor products and services per JESD46, latest issue, and to discontinue any product or service per JESD48, latest issue. Buyers should obtain the latest relevant information before placing orders and should verify that such information is current and complete. All semiconductor products (also referred to herein as “components”) are sold subject to TI’s terms and conditions of sale supplied at the time of order acknowledgment.

TI warrants performance of its components to the specifications applicable at the time of sale, in accordance with the warranty in TI’s terms and conditions of sale of semiconductor products. Testing and other quality control techniques are used to the extent TI deems necessary to support this warranty. Except where mandated by applicable law, testing of all parameters of each component is not necessarily performed.

TI assumes no liability for applications assistance or the design of Buyers’ products. Buyers are responsible for their products and applications using TI components. To minimize the risks associated with Buyers’ products and applications, Buyers should provide adequate design and operating safeguards.

TI does not warrant or represent that any license, either express or implied, is granted under any patent right, copyright, mask work right, or other intellectual property right relating to any combination, machine, or process in which TI components or services are used. Information published by TI regarding third-party products or services does not constitute a license to use such products or services or a warranty or endorsement thereof. Use of such information may require a license from a third party under the patents or other intellectual property of the third party, or a license from TI under the patents or other intellectual property of TI.

Reproduction of significant portions of TI information in TI data books or data sheets is permissible only if reproduction is without alteration and is accompanied by all associated warranties, conditions, limitations, and notices. TI is not responsible or liable for such altered documentation. Information of third parties may be subject to additional restrictions.

Resale of TI components or services with statements different from or beyond the parameters stated by TI for that component or service voids all express and any implied warranties for the associated TI component or service and is an unfair and deceptive business practice. TI is not responsible or liable for any such statements.

Buyer acknowledges and agrees that it is solely responsible for compliance with all legal, regulatory and safety-related requirements concerning its products, and any use of TI components in its applications, notwithstanding any applications-related information or support that may be provided by TI. Buyer represents and agrees that it has all the necessary expertise to create and implement safeguards which anticipate dangerous consequences of failures, monitor failures and their consequences, lessen the likelihood of failures that might cause harm and take appropriate remedial actions. Buyer will fully indemnify TI and its representatives against any damages arising out of the use of any TI components in safety-critical applications.

In some cases, TI components may be promoted specifically to facilitate safety-related applications. With such components, TI’s goal is to help enable customers to design and create their own end-product solutions that meet applicable functional safety standards and requirements. Nonetheless, such components are subject to these terms.

No TI components are authorized for use in FDA Class III (or similar life-critical medical equipment) unless authorized officers of the parties have executed a special agreement specifically governing such use.

Only those TI components which TI has specifically designated as military grade or “enhanced plastic” are designed and intended for use in military/aerospace applications or environments. Buyer acknowledges and agrees that any military or aerospace use of TI components which have ***not*** been so designated is solely at the Buyer's risk, and that Buyer is solely responsible for compliance with all legal and regulatory requirements in connection with such use.

TI has specifically designated certain components as meeting ISO/TS16949 requirements, mainly for automotive use. In any case of use of non-designated products, TI will not be responsible for any failure to meet ISO/TS16949.

Products		**Applications**	
Audio	www.ti.com/audio	Automotive and Transportation	www.ti.com/automotive
Amplifiers	amplifier.ti.com	Communications and Telecom	www.ti.com/communications
Data Converters	dataconverter.ti.com	Computers and Peripherals	www.ti.com/computers
DLP® Products	www.dlp.com	Consumer Electronics	www.ti.com/consumer-apps
DSP	dsp.ti.com	Energy and Lighting	www.ti.com/energy
Clocks and Timers	www.ti.com/clocks	Industrial	www.ti.com/industrial
Interface	interface.ti.com	Medical	www.ti.com/medical
Logic	logic.ti.com	Security	www.ti.com/security
Power Mgmt	power.ti.com	Space, Avionics and Defense	www.ti.com/space-avionics-defense
Microcontrollers	microcontroller.ti.com	Video and Imaging	www.ti.com/video
RFID	www.ti-rfid.com		
OMAP Applications Processors	www.ti.com/omap	**TI E2E Community**	e2e.ti.com
Wireless Connectivity	www.ti.com/wirelessconnectivity		

Mailing Address: Texas Instruments, Post Office Box 655303, Dallas, Texas 75265
Copyright © 2014, Texas Instruments Incorporated