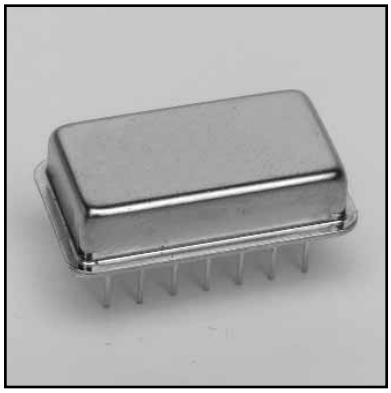

MODEL NUMBER
DS0950

Schottky Diode SPST

FEATURES

- 5 - 400 MHz
- 3 nSec 10%/90% RF Transition
- 9 nSec Switching Speed
- 60 dB Isolation
- TTL Driver
- Non-Reflective
- 14 Pin DIP

SPST

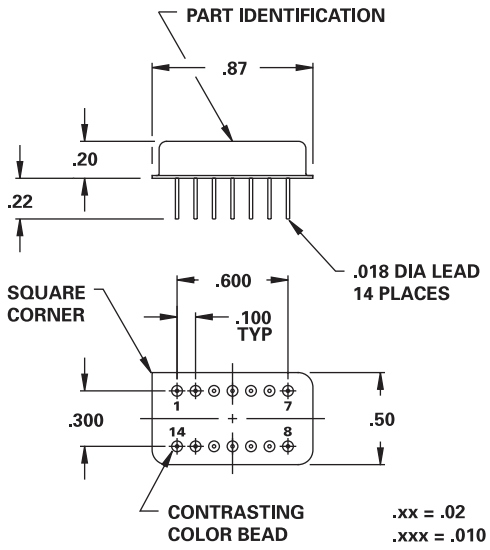

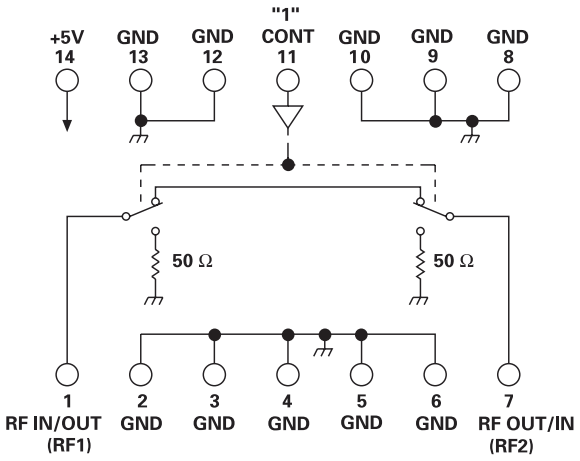

TYPICAL PERFORMANCE

at 25°C

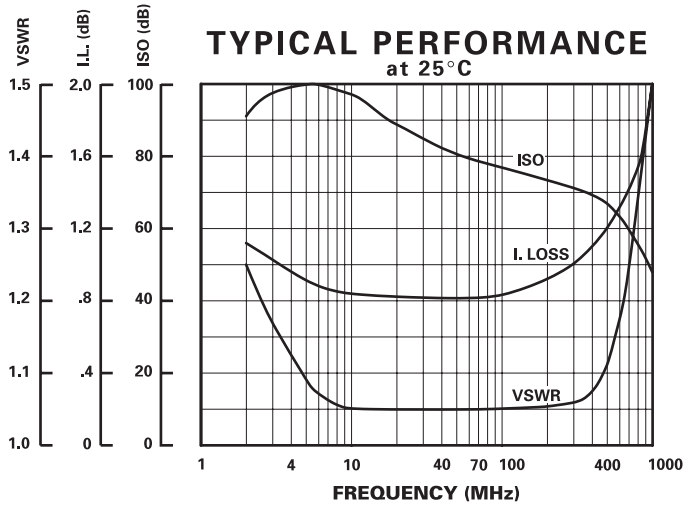

GUARANTEED PERFORMANCE

Parameter		Min	Typ	Max	Units	Conditions
Operating Frequency		5		400	MHz	
DC Current			62	100	mA	at +5 VDC Supply
Control Type			TTL			1 Line Logic "0"= Isolation Logic "1"= THRU
Control Current	*High*		0	±20	µA	VIH = +2.7V
	Low		0	±20	µA	VIL = +0.5V
Insertion Loss			0.9	1.2	dB	5 - 100 MHz
			1.1	1.5	dB	100 - 400 MHz
Isolation		60	80		dB	5 - 100 MHz
		50	65		dB	100 - 400 MHz
VSWR	*Thru*		1.2/1	1.4/1		
	Termination		1.2/1	1.5/1		
Impedance			50		OHMS	
Switching Speed			9	15	nSEC	50% TTL to 90% / 10% RF
Transition (Rise/Fall) Time			3	7	nSEC	90% / 10% or 10% / 90% RF
Switching (Video) Transients			35	50	mV	Peak Value
Intercept Points	*2nd*		+80		dBm	70 MHz / 50 MHz
	3rd		+35		dBm	35 MHz / 50 MHz
RF Power	*Operate*		+12	+10	dBm	0.1 dB Compression
	No Damage			+20	dBm	
Operating Temperature		-55	+25	+85	°C	TA