BLVR Series Low Voltage Pressure Sensors

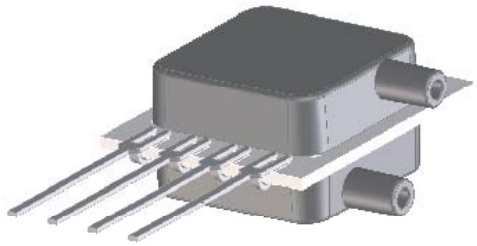

Features

- 0 to 1 “H2O to 0 to 30 “H2O Pressure Ranges
- Low Supply Voltage (1.8V to 3.3V)
- 40% Less Power Than Mini-Basic Series
- 0.3% Linearity
- Improved Front to Back Linearity
- Offset Compensated
- Superior Position Sensitivity
- Improved Warm-Up Shift Distribution
- Parylene Coating Available Upon Request

Applications

- Medical Instrumentation
- Environmental Controls
- HVAC
- Portable / Hand Held Devices

General Description

The BLVR Series Basic Sensor is based on a Dual Die Reference technology to reduce all output offset or common mode errors. It also incorporates All Sensors CoBeam² ™ Technology to reduce the overall supply voltage while maintaining comparable output levels to traditional equivalent basic sensing elements. This lower supply voltage gives rise to improved warm-up shift while the CoBeam² Technology itself reduces package stress susceptibility resulting in improved overall long term stability. The technology also vastly improves position sensitivity to nearly unmeasurable levels.

This series is intended for use with non-corrosive, non-ionic working fluids such as air, dry gases and the like. The output is also ratiometric to the suply voltage and is operable from 1.8 to 3.3 volts DC.

Standard Pressure Ranges

Device	Operating Range	Proof Pressure	Burst Pressure
BLVR-L01D	±1 inH2O	100 inH2O	300 inH2O
BLVR-L05D	±5 inH2O	200 inH2O	300 inH2O
BLVR-L10D	±10 inH2O	200 inH2O	300 inH2O
BLVR-L20D	±20 inH2O	200 inH2O	500 inH2O
BLVR-L30D	±30 inH2O	200 inH2O	800 inH2O

Equivalent Circuit

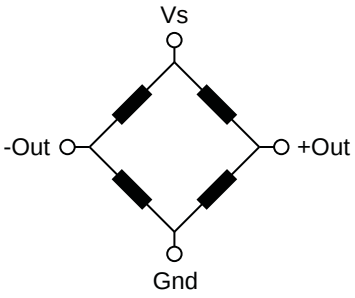

Pressure Sensor Maximum Ratings

Supply Voltage (Vs)	6 Vdc
Common Mode Pressure	5 psig
Lead Temperature (soldering 2-4 sec.)	270 °C

Environmental Specifications

Temperature Ranges	
Operating	-25 to 85 °C
Storage	-40 to 125 °C
Humidity Limits	0 to 95% RH (non condensing)

Approvals

MKT DATE	MFG DATE	ENG DATE	QA DATE
☐ As Is ☐ With Change	☐ As Is ☐ With Change	☐ As Is ☐ With Change	☐ As Is ☐ With Change

ALL SENSORS
A 16035 Vineyard Blvd. Morgan Hill, CA 95037 P 408 225 4314 F 408 225 2079 E www.allsensors.com

www.allsensors.com® Signed Original On File

Performance Characteristics for BLVR Series

All parameters are measured at 3.3 volt excitation and room temperature unless otherwise specified. Pressure measurements are with positive pressure applied to PORT B (the only port for the single port configuration).

Parameter	Min	Typ	Max	Units	Notes
Output Span					
L01D @ 1 inH2O	4.5	8.0	11.5	mV	4
L05D @ 5 inH2O	13.5	24.0	34.5	mV	4
L10D @ 10 inH2O	18.0	32.0	46.0	mV	4
L20D @ 20 inH2O	22.0	38.0	55.0	mV	4
L30D @ 30 inH2O	25.0	42.0	60.0	mV	4
Offset Voltage @ Zero Diff. Pressure	-	-	±8.0	mV	-
Offset Temperature Shift (0°C-70°C)	-	±0.1	-	mV	1
Offset Warm-up Shift	-	±10	±80	uV	2
Offset Position Sensitivity (1g)	-	±0.2	-	uV	-
Offset Long Term Drift (One Year)	-	±80	-	uV	-
Linearity, Hysteresis Error	-	0.1	±0.3	%FSS	3
Response Time (10% to 90% Pressure Response)	-	100	-	uS	-
Front to Back Linearity	-	0.25	-	%FSS	5
Temperature Effect on Resistance (0°C-70°C)	-	2800	-	ppm/°C	-
Temperature Effect on Span (0°C-70°C)	-	-1900	-	ppm/°C	-
Input Resistance	-	1.5	-	k ohm	-
Output Resistance	-	1.5	-	k ohm	-

Specification Notes

NOTE 1: Shift is relative to 25°C.

NOTE 2: Shift is within the first hour of excitation applied to the device.

NOTE 3: Measured at one-half full scale rated pressure using best straight line curve fit.

NOTE 4: The span is the algebraic difference between full scale output voltage and the offset voltage.

NOTE 5: Front-Back Linerity computed as: $\text{Lin}_{FB} = \left(\left| \frac{\text{Span}_{Front}}{\text{Span}_{Back}} \right| - 1 \right) \cdot 100\%$

How To Order

BLVR-[ ]-[ ]-[ ]

Series

Pressure Range

Option	Description
L01D	1 inH2O
L05D	5 inH2O
L10D	10 inH2O
L20D	20 inH2O
L30D	30 inH2O

Package

Option	Description
B1NS	Two Ports Same Direction
B2NS	Two Ports Opposite Direction
BGNS	One Port

Coating

Option	Description
N	No Coating
P	Parylene Coating

(Consult with factory for parylene coating)

Example: BLVR-L10D-B1NS-N

www.allsensors.com® Signed Original On File

Package Drawings

B1NS Package

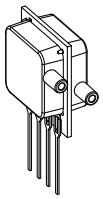

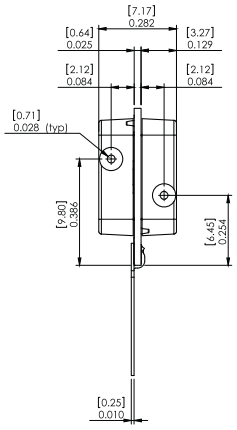

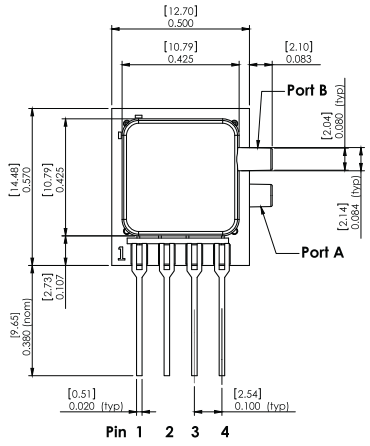

Pinout
1) Gnd
2) -Out
3) Vs
4) +Out

NOTES
1) Dimensions are in inches [mm]
2) For suggested pad layout, see drawing: PAD-01

B2NS Package

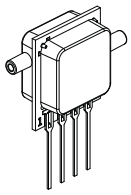

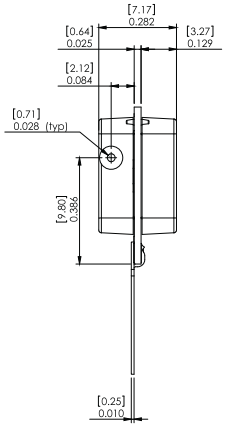

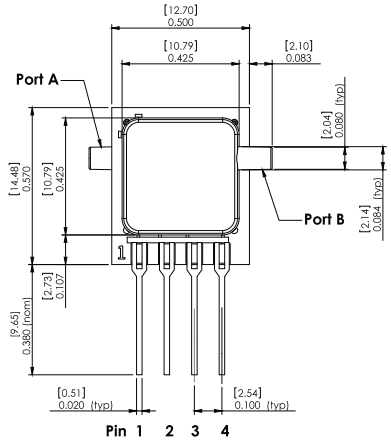

Pinout
1) Gnd
2) -Out
3) Vs
4) +Out

NOTES
1) Dimensions are in inches [mm]
2) For suggested pad layout, see drawing: PAD-01

BGNS Package

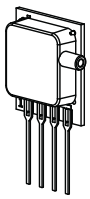

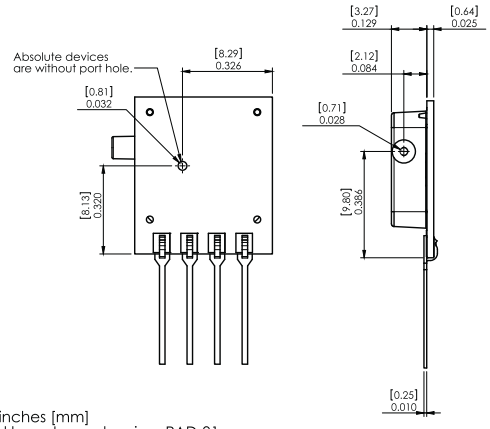

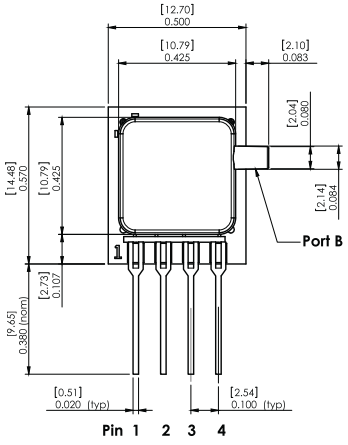

Pinout
1) Gnd
2) -Out
3) Vs
4) +Out

NOTES
1) Dimensions are in inches [mm]
2) For suggested pad layout, see drawing: PAD-01

ALL SENSORS
A 16035 Vineyard Blvd. Morgan Hill, CA 95037 P 408 225 4314 F 408 225 2079 E www.allsensors.com

www.allsensors.com® Signed Original On File

Suggested Pad Layout

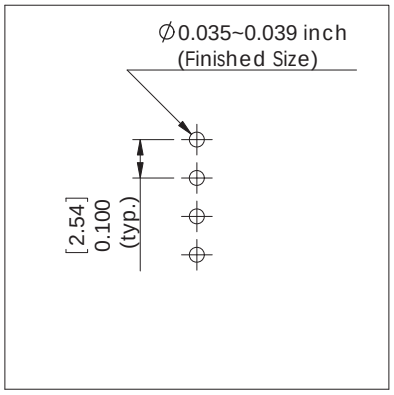

PAD-01

Package Characteristics

Package ID	Approximate Port Volume Port A	Port B	Units	Weight	Units
B1NS	181	173	mm^3	1.2	Grams
B2NS	181	173	mm^3	1.2	Grams
BGNS	1.5	173	mm^3	0.9	Grams

Product Labeling

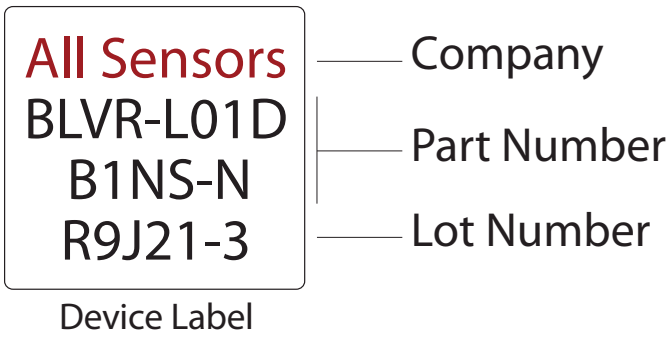

Device Label

All Sensors reserves the right to make changes to any products herein. All Sensors does not assume any liability arising out of the application or use of any product or circuit described herein, neither does it convey any license under its patent rights nor the rights of others.

www.allsensors.com® Signed Original On File