# Miniature Basic Pressure Sensors

Offset Compensated
Pressure Sensors

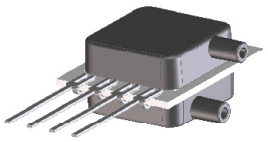

## Features

- 0 to 1 “H2O to 0 to 30 “H2O Pressure Ranges
- 0.5 % linearity
- Offset Compensated

## Applications

- Medical Instrumentation
- Environmental Controls
- HVAC

## General Description

The Miniature BASIC series pressure sensors are based upon a proprietary technology to reduce the size of the sensor and yet maintain a high level of performance. The technology is currently being patented. Output offset errors due to change in temperature, stability to warm-up, stability to long time period, and position sensitivity are all significantly reduced when compared to conventional compensation methods. In addition the sensor utilizes a silicon, micromachined, stress concentration enhanced structure to provide a very linear output to measured pressure.

These offset compensated sensors give an accurate and stable output over a wide temperature range. This series is intended for use with non-corrosive, non-ionic working fluids such as air, dry gases and the like.

The output of the device is ratiometric to the supply voltage and operation from any D.C. supply voltage up to +6V is acceptable.

## Physical Dimensions

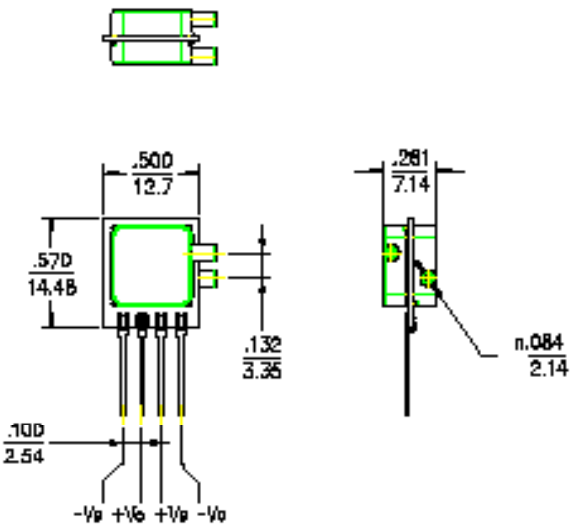


## Equivalent Circuit

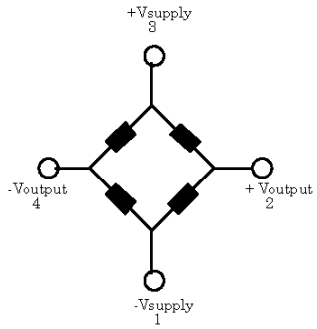


| | |
|---|---|
| Input Resittance | 1.66 k ohm |
| Output Resistance | 1.66 k ohm |
| TCR | 2600 ppm/°C |
| TCS | -2200 ppm/°C. |

**Approvals**

| MKT DATE | MFG DATE | ENG DATE | QA DATE |
|---|---|---|---|
| ☐ As Is ☐ With Change | ☐ As Is ☐ With Change | ☐ As Is ☐ With Change | ☐ As Is ☐ With Change |



ALL SENSORS
A 16035 Vineyard Blvd. Morgan Hill, CA 95037 P 408 225 4314 F 408 225 2079 E www.allsensors.com

## Pressure Sensor Characteristics Maximum Ratings

| | |
|---|---|
| Supply Supply Voltage VS | 6 Vdc |
| Common-mode pressure | 5 psig |
| Lead Temperature (soldering 2-4 sec.) | 250°C |

## Environmental Specifications

| | |
|---|---|
| **Temperature Ranges** | |
| Compensated | 0 to 70° C |
| Operating | -25 to 85° C |
| Storage | -40 to 125° C |
| Humidity Limits | 0 to 95% RH (non condensing) |

## Standard Pressure Ranges

### Single in Line Packages-SIP

| One Port | | Two Ports Same Side | Two Ports Opposite Side |
|---|---|---|---|
| Part Number | Operating Pressure | Part Number | Part Number |
| 1 INCH-G-BASIC | 0 - 1 "H2O | 1 INCH-D1-BASIC | 1 INCH-D2-BASIC |
| 5 INCH-G-BASIC | 0 - 5 "H2O | 5 INCH-D1-BASIC | 5 INCH-D2-BASIC |
| 10 INCH-G-BASIC | 0 - 10 "H2O | 10 INCH-D1-BASIC | 10 INCH-D2-BASIC |
| 20 INCH-G-BASIC | 0 - 20 "H2O | 20 INCH-D1-BASIC | 20 INCH-D2-BASIC |
| 30 INCH-G-BASIC | 0 - 30 "H2O | 30 INCH-D1-BASIC | 30 INCH-D2-BASIC |

## Performance Characteristics for 1 INCH-x-BASIC

| Parameter, note 1 | Minimum | Nominal | Maximum | Units |
|---|---|---|---|---|
| Operating Range, differential pressure | -- | 1.0 | -- | "H2O |
| Output Span, @ 1 "H2O, note 5 | 4.0 | 7.0 | 14.0 | mV |
| Offset Voltage @ zero differential pressure | -- | -- | ±10 | mV |
| Offset Temperature Shift (0°C-70°C), note 2 | -- | ±0.1 | -- | mV |
| Offset Warm-up Shift, note 3 | -- | ±10 | -- | uV |
| Offset Position Sensitivity (1g) | -- | ±15 | -- | uV |
| Offset Long Term Drift (one year) | -- | ±80 | -- | uV |
| Linearity, hysteresis error, note 4 | -- | 0.1 | ±0.5 | %fs |

## Performance Characteristics for 5 INCH-x-BASIC

| Parameter, note 1 | Minimum | Nominal | Maximum | Units |
|---|---|---|---|---|
| Operating Range, differential pressure | -- | 5.0 | -- | "H2O |
| Output Span, @ 5 "H2O, note 5 | 15 | 22.5 | 30 | mV |
| Offset Voltage @ zero differential pressure | -- | -- | ±10 | mV |
| Offset Temperature Shift (0°C-70°C), note 2 | -- | ±0.1 | -- | mV |
| Offset Warm-up Shift, note 3 | -- | ±10 | -- | uV |
| Offset Position Sensitivity (1g) | -- | ±15 | -- | uV |
| Offset Long Term Drift (one year) | -- | ±80 | -- | uV |
| Linearity, hysteresis error, note 4 | -- | 0.1 | ±0.5 | %fs |

## Performance Characteristics for 10 INCH-x-BASIC

| Parameter, note 1 | Minimum | Nominal | Maximum | Units |
|---|---|---|---|---|
| Operating Range, differential pressure | -- | 10.0 | -- | "H2O |
| Output Span, @ 10 "H2O, note 5 | 15 | 30 | 45 | mV |
| Offset Voltage @ zero differential pressure | -- | -- | ±10 | mV |
| Offset Temperature Shift (0°C-70°C), note 2 | -- | ±0.1 | -- | mV |
| Offset Warm-up Shift, note 3 | -- | ±10 | -- | uV |
| Offset Position Sensitivity (1g) | -- | ±10 | --- | uV |
| Offset Long Term Drift (one year) | -- | ±80 | -- | uV |
| Linearity, hysteresis error, note 4 | -- | 0.1 | ±0.5 | %fs |

## Performance Characteristics for 20 INCH-x-BASIC

| Parameter, note 1 | Minimum | Nominal | Maximum | Units |
|---|---|---|---|---|
| Operating Range, differential pressure | -- | 20.0 | -- | "H2O |
| Output Span, @ 20 "H2O, note 5 | 15 | 30 | 45 | mV |
| Offset Voltage @ zero differential pressure | -- | -- | ±10 | mV |
| Offset Temperature Shift (0°C-70°C), note 2 | -- | ±0.1 | -- | mV |
| Offset Warm-up Shift, note 3 | -- | ±10 | -- | uV |
| Offset Position Sensitivity (1g) | -- | ±5 | -- | uV |
| Offset Long Term Drift (one year) | -- | ±80 | -- | uV |
| Linearity, hysteresis error, note 4 | -- | 0.1 | ±0.5 | %fs |

## Performance Characteristics for 30 INCH-x-BASIC

| Parameter, note 1 | Minimum | Nominal | Maximum | Units |
|---|---|---|---|---|
| Operating Range, differential pressure | -- | 30.0 | -- | "H2O |
| Output Span, @ 30 "H2O, note 5 | 15 | 30 | 45 | mV |
| Offset Voltage @ zero differential pressure | -- | -- | ±10 | mV |
| Offset Temperature Shift (0°C-70°C), note 2 | -- | ±0.1 | -- | mV |
| Offset Warm-up Shift, note 3 | -- | ±10 | --- | uV |
| Offset Position Sensitivity (1g) | -- | ±5 | --- | uV |
| Offset Long Term Drift (one year) | -- | ±80 | -- | uV |
| Linearity, hysteresis error, note 4 | -- | 0.05 | ±0.5 | %fs |

**Specification Notes**

NOTE 1: ALL PARAMETERS ARE MEASURED AT 4.5 VOLT EXCITATION, FOR THE NOMINAL FULL SCALE PRESSURE AND ROOM TEMPERATURE UNLESS OTHERWISE SPECIFIED. PRESSURE MEASUREMENTS ARE WITH NEGATIVE PRESSURE APPLIED TO THE TOP-PORT (THE ONLY PORT FOR THE SINGLE PORT) CONFIGURATION.

NOTE 2: SHIFT IS RELATIVE TO 25°C.

NOTE 3: SHIFT IS WITHIN THE FIRST HOUR OF EXCITATION APPLIED TO THE DEVICE.

NOTE 4: MEASURED AT ONE-HALF FULL SCALE RATED PRESSURE USING BEST STRAIGHT LINE CURVE FIT.

NOTE 5: THE VOLTAGE ADDED TO THE OFFSET VOLTAGE AT FULL SCALE PRESSURE.

**Pressure Response: for any pressure applied the response time to get to 90% of pressure applied is typically less than 100 useconds.**

All Sensors reserves the right to make changes to any products herein. All Sensors does not assume any liability arising out of the application or use of any product or circuit described herein, neither does it convey any license under its patent rights nor the rights of others.



ALL SENSORS
A 16035 Vineyard Blvd. Morgan Hill, CA 95037 P 408 225 4314 F 408 225 2079 E www.allsensors.com