DRV8899-Q1 Evaluation Module User's Guide

This document is provided with the DRV8899-Q1 customer evaluation module (EVM) as a supplement to the DRV8899-Q1 Automotive Stepper Motor Driver datasheet. This user's guide details the hardware implementation of the EVM. Details on using the graphical user interface (GUI) software with this EVM can be found in the DRV8899-Q1EVM GUI User's Guide.

Contents

1 Board Overview 2
2 Introduction 3
2.1 Connectors 3
2.2 Test Points 3
2.3 Jumpers 4
2.4 Motor Outputs 4
2.5 Reverse-Battery Protection 4
2.6 EVM Operation 5
2.7 EVM documentation 5

List of Figures

1 Top view of typical board configuration (EVM provided may vary) 2
2 Connections 3
3 E3 EVM reverse-battery circuit 5

List of Tables

1 Connections to DRV8899-Q1 Using External Microcontroller 4

Trademarks

MSP430 is a trademark of Texas Instruments.
Windows is a registered trademark of Microsoft Corporation.
All other trademarks are the property of their respective owners.

Copyright © 2019, Texas Instruments Incorporated

1 Board Overview



WARNING

DRV8899-Q1 EVM is rated for power supply voltages between 4.5 VDC and 45 VDC max. The components can support peak output currents up to a maximum of 2.5 ADC. To minimize risk or personal injury, fire and/or property damage, always maintain component temperatures below the 130°C rating of the printed circuit board material. TI requires that the continuous current into or out of each xOUTx channel be limited to 910 mADC when operating for extended periods of time with a maximum supply voltage of 13.5 VDC and minimum slew rate of 105 V/us. Under these driving conditions, an ambient temperature of 25°C should never be exceeded. Higher voltages and slower slew rates will increase switching losses in the DRV8899-Q1, so output current may need to be derated in these cases to keep board temperature below 130°C.

Figure 1 shows the top view of the printed circuit board (PCB).

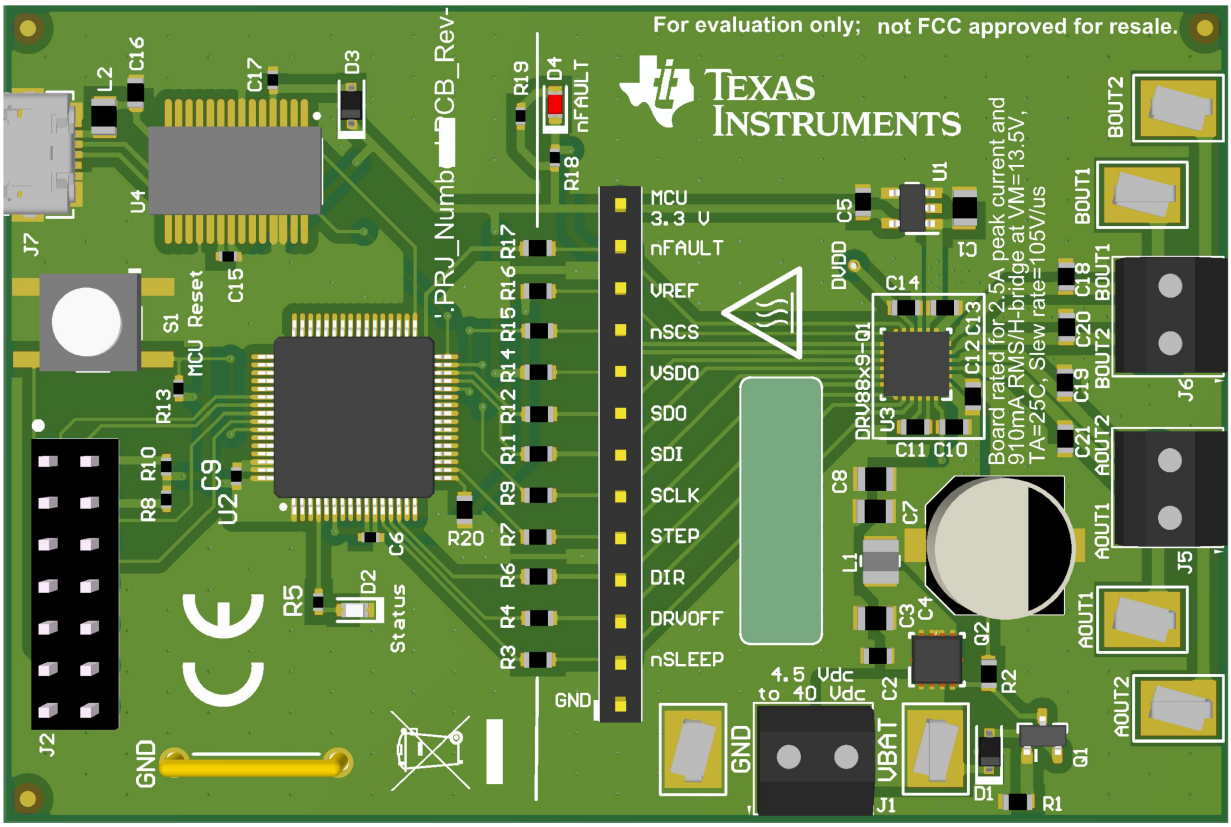

Figure 1. Top view of typical board configuration (EVM provided may vary)

Copyright © 2019, Texas Instruments Incorporated

2 Introduction

The DRV8899-Q1 customer EVM is a platform to support prototyping and evaluation for the DRV8899-Q1, a medium-voltage dual H-bridge driver for stepper driving applications. The DRV8899-Q1 drives a single bipolar stepper with microstepping resolutions down to 1/256. It provides a variety of programmable decay settings.

The EVM uses an MSP430™ microcontroller and a USB interface chip to manage communication from the GUI software application installed on a PC computer with Windows®. The GUI sends serial commands to the MSP430 to control the device signals, monitor faults, read and write SPI registers, and drive a stepper motor by issuing the step commands at the desired rate.

This user's guide details the hardware configurability of the evaluation module.

2.1 Connectors

The DRV8899-Q1 EVM supplies the VM (motor voltage) power rail through a reverse-battery protection circuit through terminal block (J1). A set of test clips in parallel with the terminal block provide connections to monitor the input power rail.

The user must apply the VM voltage according to recommended parameters listed in the data sheet (4.5 V to 45 V).

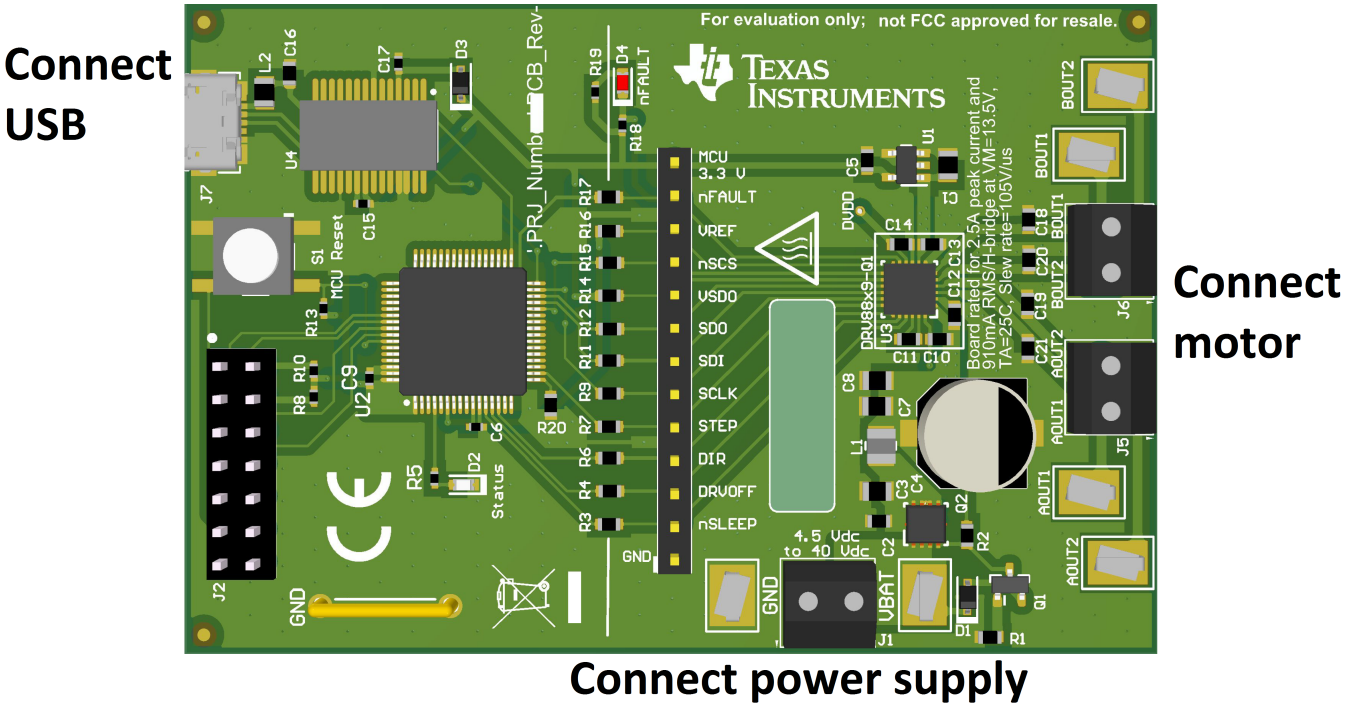

Figure 2. Connections

2.2 Test Points

A header connector with 0.100-inch pitch (J3) provides access to the DRV8899-Q1 signals. This can be used for measurement or as a connector to control the DRV8899-Q1 from an external microcontroller for prototype purposes. To disconnect the on-board MSP430 microcontroller, remove the resistors between the MSP430 and the J3 header (R3, R4, R6, R7, R9, R11, R12, R14, R15, R16, and R17). Table 1 describes the connections available on the J3 header. Each header pin is labeled on the evaluation module, and connects to a similarly named pin of the DRV8899-Q1.

Copyright © 2019, Texas Instruments Incorporated

Table 1. Connections to DRV8899-Q1 Using External Microcontroller

Header Label	Description
MCU 3.3 V	3.3 V rail for the on-board MSP430 and nFAULT LED
DVDD	Internal supply voltage regulator for device logic. DVDD may not be located on the header for some prototype EVMs
nFAULT	Fault output
VREF	Voltage reference for full-scale current
nSCS	Active-low chip select for SPI communication
VSDO	Supply pin for SDO output. Connect to 5-V or 3.3-V depending on the desired logic level.
SDO	Serial data output. Data is shifted out on the rising edge of the SCLK pin.
SDI	Serial data input. Data is captured on the falling edge of the SCLK pin
SCLK	Serial clock input. Serial data is shifted out and captured on the corresponding rising and falling edge on this pin.
STEP	STEP, Step input
DIR	DIR, Direction input
DRVOFF	DRVOFF, Disable motor-driving outputs
nSLEEP	nSLEEP, Sleep mode input
GND	Ground

A test point pad is available near the DRV8899-Q1 IC for probing DVDD.

2.3 Jumpers

The DRV8899-Q1 EVM has no jumpers.

2.4 Motor Outputs

Two motor connectors are provided (J6 and J7).

2.5 Reverse-Battery Protection

The DRV8899-Q1EVM board contains a reverse-battery protection circuit. If the voltage on GND is higher than VBAT, then the circuit in Figure 3 should protect the DRV8899-Q1 and the MSP430 as long as the USB in not plugged into a computer. If a USB cord is connected to the board while evaluating a reverse-battery condition, the board, USB cable, or the USB port on the computer may be damaged.

Copyright © 2019, Texas Instruments Incorporated

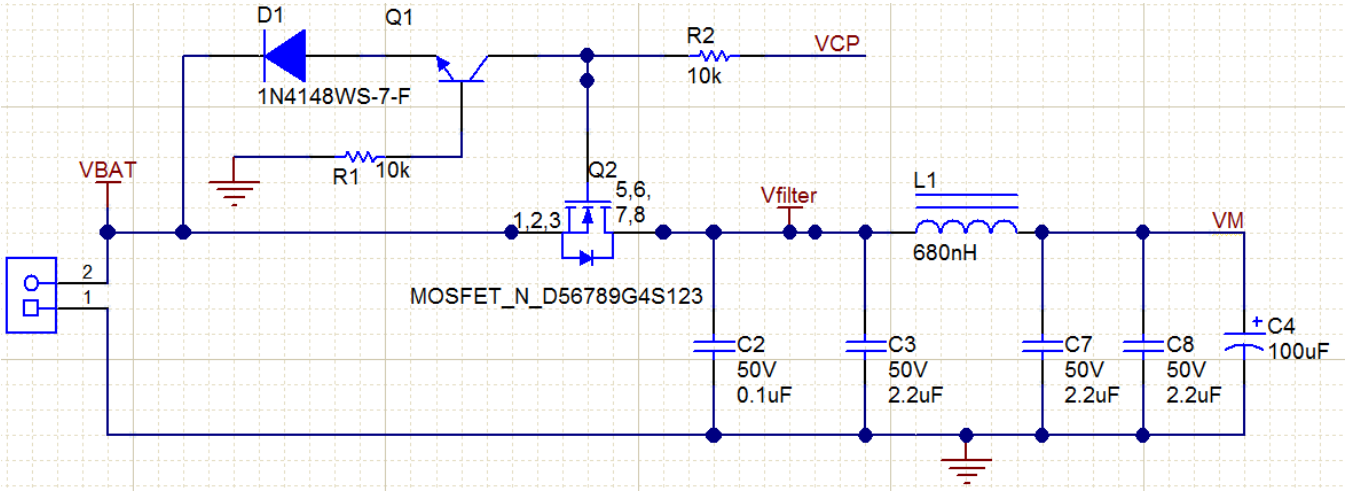

Figure 3. E3 EVM reverse-battery circuit

2.6 EVM Operation

Use the following steps to operate the EVM:

- Step 1. Install the drivers and GUI. For instructions see DRV8899-Q1EVM GUI User's Guide.
- Step 2. Connect the wires of the stepper motor to the AOUT1, AOUT2, BOUT1, and BOUT2 terminals.
- Step 3. Connect the VM power supply to VM or VBAT connections, but do not apply power at this step.
- Step 4. Connect the USB cable between the PC and the EVM. When the USB is connected to the EVM, the status LED will begin to blink.
- Step 5. Open the GUI. The GUI can be found in the start menu at Texas Instruments → GUI Composer → DRV8899-Q1 → DRV8899-Q1 X.Y.Z, where X, Y, and Z are the revision numbers (to be verified) or by typing "DRV8889" into the search bar of the start menu. If a shortcut was created, double-click on the shortcut to open the GUI. The GUI can take up to 30 seconds to establish a connection. If connection is not established, select the COM port under the *Options* menu. The baud rate is 9600.
- Step 6. Apply the desired voltage (4.5 to 40 V) to the VM/VBAT and GND connections.
- Step 7. For more instructions on how to control the DRV8899-Q1 EVM from the GUI, see the DRV8899-Q1EVM GUI User's Guide.

2.7 EVM documentation

The EVM schematics, layout, and BOM are provided in the DRV8899-Q1EVM hardware files. The GUI, USB drivers, and MSP430F2617 source code are provided in the DRV8899-Q1EVM firmware and GUI software files.

Copyright © 2019, Texas Instruments Incorporated

IMPORTANT NOTICE AND DISCLAIMER

TI PROVIDES TECHNICAL AND RELIABILITY DATA (INCLUDING DATASHEETS), DESIGN RESOURCES (INCLUDING REFERENCE DESIGNS), APPLICATION OR OTHER DESIGN ADVICE, WEB TOOLS, SAFETY INFORMATION, AND OTHER RESOURCES “AS IS” AND WITH ALL FAULTS, AND DISCLAIMS ALL WARRANTIES, EXPRESS AND IMPLIED, INCLUDING WITHOUT LIMITATION ANY IMPLIED WARRANTIES OF MERCHANTABILITY, FITNESS FOR A PARTICULAR PURPOSE OR NON-INFRINGEMENT OF THIRD PARTY INTELLECTUAL PROPERTY RIGHTS.

These resources are intended for skilled developers designing with TI products. You are solely responsible for (1) selecting the appropriate TI products for your application, (2) designing, validating and testing your application, and (3) ensuring your application meets applicable standards, and any other safety, security, or other requirements. These resources are subject to change without notice. TI grants you permission to use these resources only for development of an application that uses the TI products described in the resource. Other reproduction and display of these resources is prohibited. No license is granted to any other TI intellectual property right or to any third party intellectual property right. TI disclaims responsibility for, and you will fully indemnify TI and its representatives against, any claims, damages, costs, losses, and liabilities arising out of your use of these resources.

TI’s products are provided subject to TI’s Terms of Sale (www.ti.com/legal/termsofsale.html) or other applicable terms available either on ti.com or provided in conjunction with such TI products. TI’s provision of these resources does not expand or otherwise alter TI’s applicable warranties or warranty disclaimers for TI products.

Mailing Address: Texas Instruments, Post Office Box 655303, Dallas, Texas 75265
Copyright © 2019, Texas Instruments Incorporated